WARNING

Servicing a vehicle can be dangerous. If you have not received service-related training, the risks of injury, property damage, and failure of servicing increase. The recommended servicing procedures for the vehicle in this workshop manual were developed with Mazda-trained technicians in mind. This manual may be useful to non-Mazda trained technicians, but a technician with our service-related training and experience will be at less risk when performing service operations. However, all users of this manual are excepted at least to know general safety procedures.

This manual contains “Warnings” and “Cautions” applicable to risks not normally encountered in a general technician’s experience. They should be followed to reduce the risk of injury and the risk that improper service or repair may damage the vehicle or render it unsafe. It is also important to understand that the “Warnings” and “Cautions” are not exhaustive. It is impossible to warn of all the hazardous consequences that might result from failure to follow the procedures.

The procedures recommended and described in this manual are effective methods of performing service and repair. Some require tools specifically designed for a specific purpose. Per-sons using procedures and tools which are not recommended by Mazda Motor Corporation must satisfy themselves thoroughly that neither personal safety nor safety of the vehicle will be jeopardized.

The contents of this manual, including drawings and specifications, are the latest available at the time of printing, and Mazda Motor Corporation reserves the right to change the vehicle designs and alter the contents of this manual without notice and without incurring obligation.

Parts should be replaced with genuine Mazda replacement parts or with parts which match the quality of genuine Mazda replacement parts. Persons using replacement parts of lesser quality than that of genuine Mazda replacement parts must satisfy themselves thoroughly that neither personal safety nor safety of the vehicle will be jeopardized.

Mazda Motor Corporation is not responsible for any problems which may arise from the use of this manual. The cause of such problems includes but is not limited to insufficient service-related training, use of improper tools, use of replacement parts of lesser quality than that of genuine Mazda replacement parts, or not being aware of any revision of this manual.

Mazda2
Wiring Diagram

CONTENTS

TITLE	Section
GENERAL INFORMATION OF WIRING DIAGRAMS	GI
GROUND POINTS	Y
ELECTRICAL WIRING SCHEMATIC	W
SYSTEM CIRCUIT DIAGRAM/ CONNECTOR LOCATIONS	A-U
COMMON CONNECTORS	X
JOINT BOX	JB
PARTS INDEX	PI

FOREWORD

This wiring diagram incorporates the wiring schematics of the basic vehicle and available optional equipment. Actual vehicle wiring may vary slightly depending on optional equipment or local specifications, or both. All information in this booklet is based on information available at the time of printing. Mazda Motor Corporation reserves the right to make changes without previous notice.

Mazda Motor Corporation
HIROSHIMA, JAPAN

APPLICATION :
This manual applies to vehicles beginning with the Vehicle Identification Numbers (VIN) on the following page.

Ⓒ2002 Mazda Motor Corporation

PRINTED IN AUSTRALIA, OCT. 2002
5567-1A-02J

VEHICLE IDENTIFICATION NUMBERS (VIN) (CHASSIS NUMBER)

Australian specs.
JM0 DY10Y100 100001–

General (R.H.D.) specs.
JM6 DY10J100 100001–
JM6 DY10Y100 100001–

WIRING COLOR CODE

Color	Code	Color	Code
Black	B	Orange	O
Blue	L	Pink	P
Brown	BR	Red	R
Dark Blue	DL	Sky Blue	SB
Dark Green	DG	Tan	T
Gray	GY	Violet	V
Green	G	White	W
Light Blue	LB	Yellow	Y
Light Green	LG		

SYSTEM INDEX

GENERAL INFORMATION 2

GROUND POINT 12

ELECTRICAL WIRING SCHEMATIC 16

ENGINE-RELATED SYSTEM
- CHARGING SYSTEM 18
- STARTING SYSTEM 18
- ENGINE CONTROL SYSTEM 20
- FUEL CONTROL SYSTEM 30
- COOLING FAN SYSTEM 32

CHASSIS-RELATED SYSTEM
- EC-AT CONTROL SYSTEM 20
- ANTILOCK BRAKE SYSTEM 76

INSTRUMENT CLUSTER-RELATED SYSTEM
- INSTRUMENT CLUSTER 34

BODY-RELATED SYSTEM
- WINDSHIELD WIPER AND WASHER 42
- HORN 54
- REAR WINDOW DEFROSTER 60
- POWER WINDOW SYSTEM 68
- POWER DOOR LOCK SYSTEM 70
- POWER OUTSIDE MIRROR 74
- AIR BAG SYSTEM SERVICE CAUTIONS/ SERVICE WARNINGS 78
- AIR BAG SYSTEM 80
- IMMOBILIZER SYSTEM 84

INTERIOR LIGHTING SYSTEM
- CARGO COMPARTMENT LIGHT 64
- ILLUMINATION LIGHT 62
- INTERIOR LIGHT 64

EXTERIOR LIGHTING SYSTEM
- HEADLIGHT 44
- LICENSE PLATE LIGHT 48
- PARKING LIGHT 48
- TAILLIGHT 48
- FRONT FOG LIGHT 46
- TURN AND HAZARD WARNING LIGHT 50
- BACK-UP LIGHT 52
- BRAKE LIGHT 54
- HIGH-MOUNT BRAKE LIGHT 54

AIR CONDITIONING-RELATED SYSTEM
- HEATER AND AIR CONDITIONER 56
- MAGNETIC CLUTCH CONTROL SYSTEM 58

ACCESSORY
- CIGARETTE LIGHTER 60
- AUDIO SYSTEM 66

OTHER
- DATA LINK CONNECTOR 86

COMMON CONNECTOR LIST 88

JOINT BOX COMPLETE WIRING SYSTEM 94

PARTS INDEX 95

Contents of wiring diagrams

- This wiring diagram comprises the sections shown below.

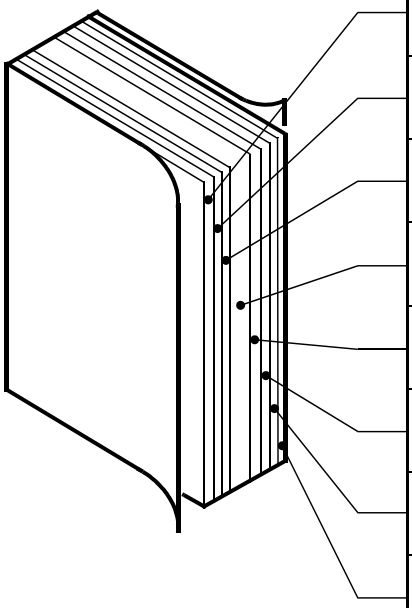

GI	**General information of wiring diagrams**	A how-to on using and reading wiring diagrams, using test equipment,checking harness and connectors,and finding trouble spots
Y	**Ground points**	Ground routes from and to the battery
W	**Electrical wiring schematic**	Shows main fuses and other fuses for each system
A-U	**System circuit diagram/ connector locations**	Shows circuit and connector diagrams and component and connector location diagrams
X	**Common connectors**	Shows connectors common throughout system
JB	**Joint box complete wiring system**	Shows internal circuits and connectors
FB	**Main fuse block complete wiring system**	Shows internal circuits and connectors
PI	**Parts Index**	Gives page number of circuit diagram for each component

Depending on the vehicle model, the actual sections may be different.

Ground points

- This shows ground points of the harness.

GROUND POINTS(4SD)

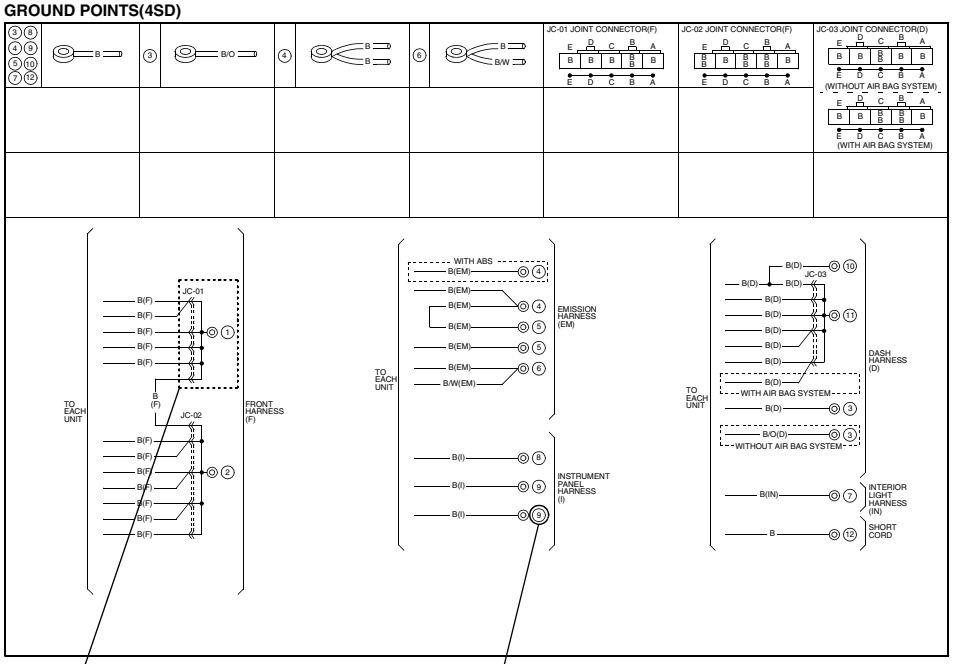

Ground indication

On vehide	Indication
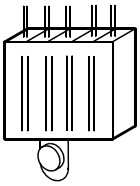	To circuit 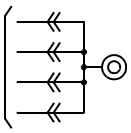

On circuit diagrams and ground points

The ground connection numbers in system circuit diagrams correspond to those in the ground point diagram.

ENGINE CONTROL SYSTEM

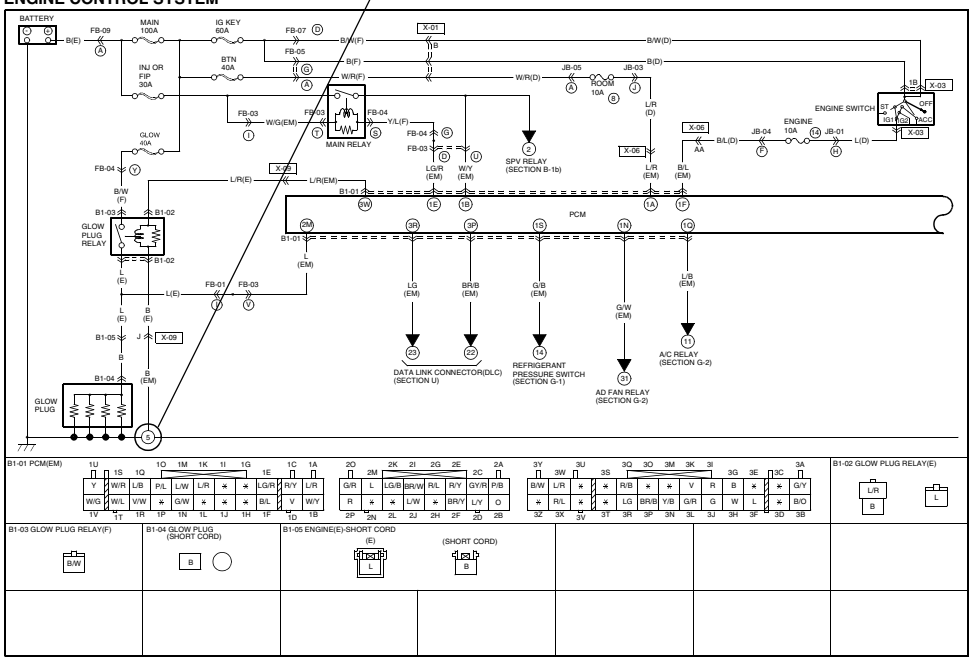

System circuit diagram/connector diagram

- These diagrams show the circuits for each system, from the power supply to the ground. The power supply side is on the upper part of the page, the ground side on the lower part. The diagrams describe circuits with the ignition switch off.
  Below is an explanation of the various points in the diagram.

System name

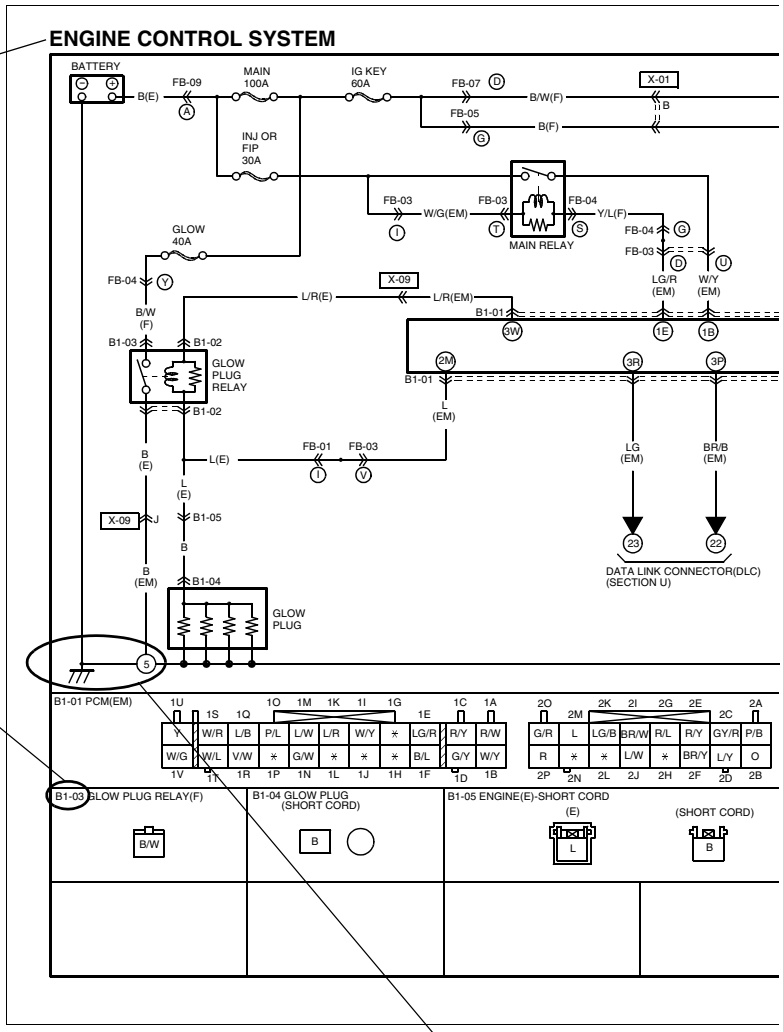

Connector code

The prefix letter indicates the system in which the connector is used.

- Y : Ground connector
- A : Charging system/starting system connectors
- B : Engine control system connectors
- C : Gauge control system connectors
- D : Wiper system connectors
- E : Lighting system connectors
- F : Signal system connectors
- G : Air-conditioning system connectors
- H : Transmission control/Key interlock/ Shift-lock system connectors
- I : Interior light system connectors
- J : Audio/radio connectors
- K : Power window/power door lock system connectors
- L : Remote control mirror system connectors
- M : Sliding sunroof system connectors
- O : Anti-lock brake system connectors
- P : Power seat/seat warmer system connectors
- Q : Auto cruise control system connectors
- S : Passive shoulder belt control/Airbag system connectors
- T : Others
- U : Data link connector
- X : Common connectors
- JB : Joint box connections
- FB : Main fuse block

Ground numbers

A harness ground is represented differently than a unit ground.

Types of grounds	Symbol
Harness	
Unit	

Reading Wiring Diagrams

The number indicates that the circuit continues to the related system diagram.

System code

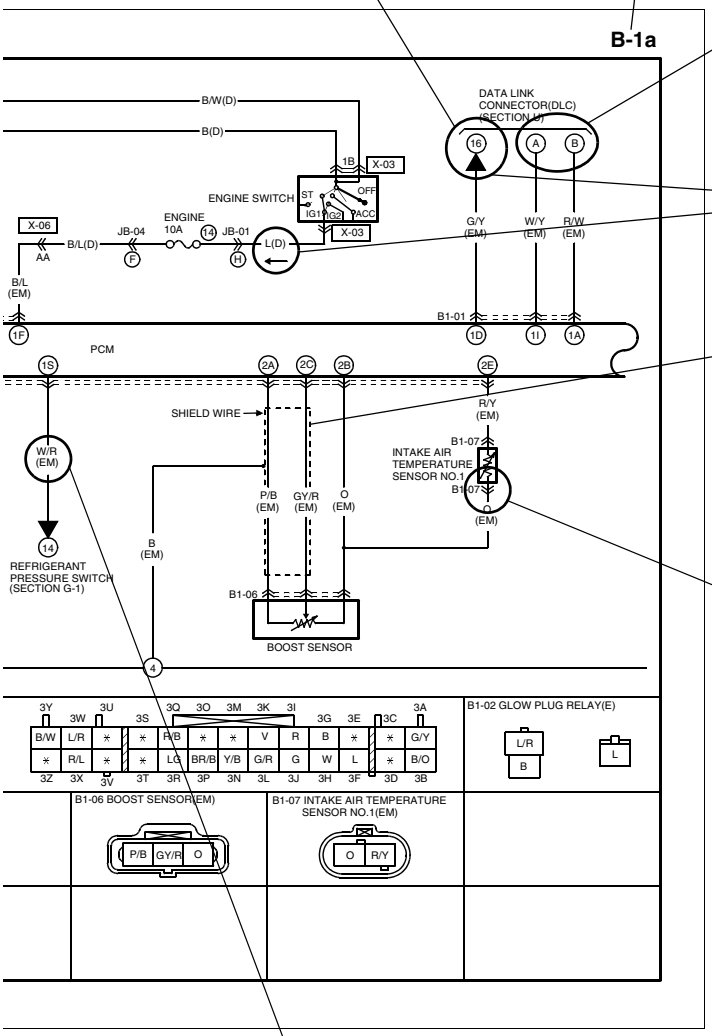

Multiplex communication

Indicates communication with connected parts. Signals are transmitted back and forth between connected parts.

Current symbol

Current flows in the direction of the arrow.

Indicates shielded wire.*

* Shielded wire :
Prevents signal disturbances from electrical interference.
Wire is covered by a metal meshing for grounding.

Connector symbols

- Male and female connectors are represented as follows in the circuit and connector diagrams.

		Circuit diagram symbol	Connector diagram symbol
Male		Male	L R
Female		Female	L R

- Like connectors are linked by dashed lines between the connector symbols.
- Connector diagrams show connectors on the harness side. The terminal indicates the view from the harness side.

(Example)

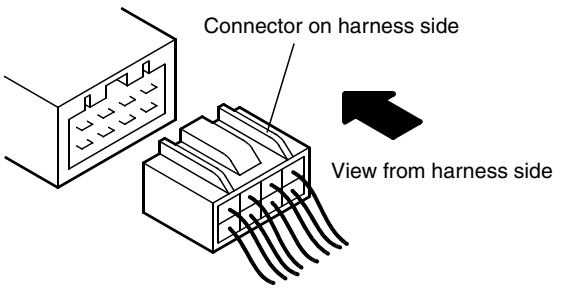

- Colors for connectors except white are given in locations.
- Unused terminals are indicated by ✻ .

Wire color code (harness symbol)

- Two-color wires are indicated by a two-letter symbol.The first indicates the base color of the wire, the second the color of the stripe.
  For example:

  W/R is a white wire with a red strip
  BR/Y is a brown wire with a yellow strip

Symbol (Example)

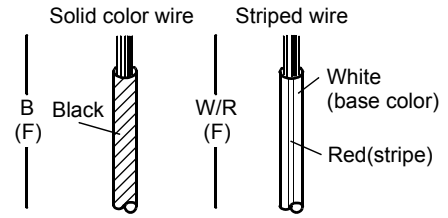

- The harness symbol is in ( ) following the harness symbols (refer to P-7.).

Routing diagram

- The routing diagram shows where electrical components are on the system circuit diagram by call out line and connector symbols.

Connector symbol

Shows the system that uses the connector.

(Example)

Connector	Symbol
Common connectors	X-19
System connectors	I-03

Component name

Shows the names of components in routing diagrams.

Ground symbol

Shows the ground in system diagrams.

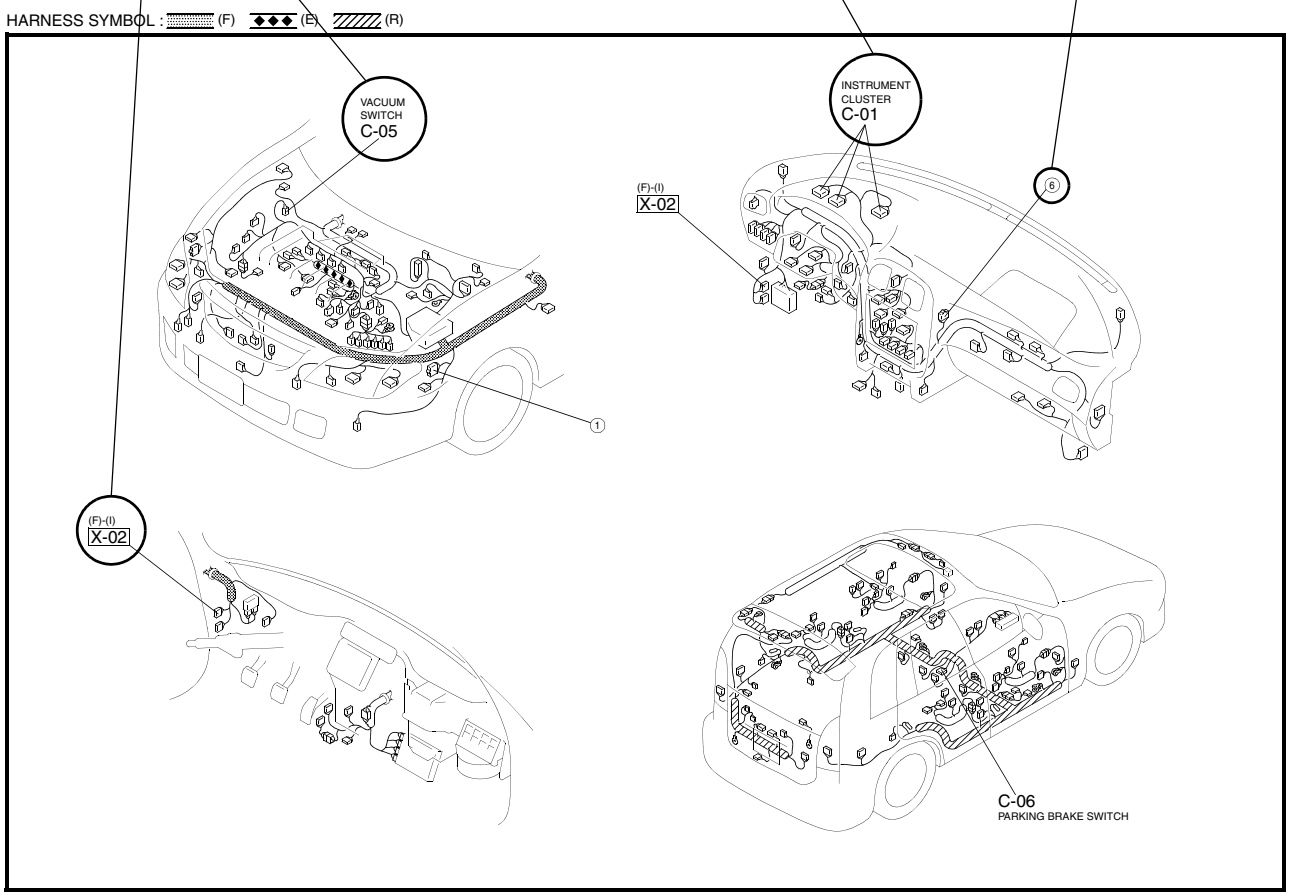

Harness symbols

DESCRIPTION OF HARNESS	SYMBOL		DESCRIPTION OF HARNESS	SYMBOL	
FRONT HARNESS	(F)		DOOR NO.1 HARNESS	(DR1)	
FRONT NO.2 HARNESS	(F2)		DOOR NO.2 HARNESS	(DR2)	
ENGINE HARNESS	(E)	◆◆◆	DOOR NO.3 HARNESS	(DR3)	
DASH HARNESS	(D)	○○○	DOOR NO.4 HARNESS	(DR4)	
REAR HARNESS	(R)		FLOOR HARNESS	(FR)	
REAR NO.2 HARNESS	(R2)		INTERIOR LIGHT HARNESS	(IN)	
REAR NO.3 HARNESS	(R3)		A/C HARNESS	(AC)	
INSTRUMENT PANEL HARNESS	(I)		INJECTION HARNESS	(INJ)	
EMISSION HARNESS	(EM)		HAND BRAKE HARNESS	(HB)	
EMISSION NO.2 HARNESS	(EM2)				
EMISSION NO.3 HARNESS	(EM3)				

Symbols

Symbol	Meaning
Battery	• Generates electricity through chemical reaction. • Supplies direct current to circuits.
Ground (1)	• Connecting point to vehicle body or other ground wire where current flows from positive to negative terminal of battery. • Ground (1) indicates a ground point to body through wire harness. • Ground (2) indicates point where component is grounded directly to body. Remarks • Current will not flow through a circuit if ground is faulty.
Ground (2)	
Fuse (1) (box)	• Melts when current flow exceeds that specified for circuit, interrupts current flow. Precautions • Do not replace with fuses exceeding specified capacity. <Blade type> <Tube type> <Cartridge type> <Fusible link>
Fuse (2) (Cartridge)	
Main fuse/ Fusible link	
Transistor (1) Collector (C) Base (B) **NPN** Emitter (E)	• Electrical switching component. • Turns on when voltage is applied to the base (B). Collector indication mark B E C E C B C E B
Transistor (2) Collector (C) Base (B) **PNP** Emitter (E)	• Reading code. 2 S C 828 A Number of terminals Semiconductor Revision mark A:High-frequency PNP B:Low-frequency PNP C:High-frequency NPN D:Low-frequency NPN

Symbol	Meaning
Light 3.4W	• Emits light and generates heat when current flows through filament.
Resistance	• A resistor with a constant value. • Mainly used to protect electrical components in circuits by maintaining rated voltage.
Motor M	• Converts electrical energy into mechanical energy.
Pump P	• Pulls in and discharges gases and liquids.
Cigarette lighter	• Electrical coil that generates heat.
Horn	• Generates sound when current flows.
Speaker	
Heater	• Generates heat when current flows.
Speed sensor	• Movement of magnet in speedometer turns contact within sensor on and off.
Ignition switch ST B2 B1 IG2 OFF IG1 OFF ACC	• Turning ignition key switches circuit to operate various component. (NOTE) Ignition switch is called engine switch on diesel vehicles.

Symbol	Meaning	Symbol	Meaning
Switch (1) Normally open (NO)	• Allows or breaks current flow by opening and closing curcuits.	Harness **Connection** When circuit C-D is connected to circuit A-B, the connection D is indicated by a black dot.	A D B C For vehicles with ABS, use the A-B circuit.
Switch (2) Normally closed (NC)		**Selection** Diversion point D for the different circuits according to the vehicle's specification is indicated by a white dot.	WITH ABS A D B WITHOUT ABS C For vehicles without ABS, use the C-B circuit.
Relay (1) Normally open (NO)	• Current flowing through coil produces electromagnetic force causing contact to open or close. No current to coil: No flow Current to coil: Flow		
Relay (2) Normally closed (NC)	• Current flowing through coil produces electromagnetic force causing contact to close. No current to coil: Flow Current to coil: No flow		
Sensor (variable)	• Resistance changes with other components operation.	Diode	• Known as a semiconductor rectifier, the diode allows current flow in one direction only. Cathode(K) Anode(A) Flow of electric current K A K A K A
Sensor (thermistor)	• Resistance changes with temperature.	Light-emitting diode (LED)	• A diode that lights when current flows. • Unlike ordinary bulbs, the diode does not generate heat when lit. Cathode(K) Anode(A) Cathode(K) Anode(A) Flow of current
Capacitor	• Component that temporarily stores electrical charge.		
Solenoid	• Current flowing through coil generates electromagnetic force to operate plungers.	Reference diode (Zener diode)	• Allows current to flow in one direction up to a certain voltage; allows current to flow in the other direction once that voltage is exceeded.

Reading Wiring Diagrams

Symbol	Meaning
Extent of the change in the wiring position (1) 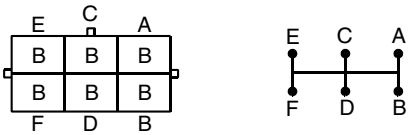	• The wiring position can be exchanged freely within the connector.
Extent of the change in the wiring position (2) 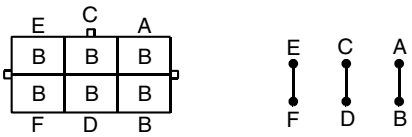	• The wiring position can be exchanged according to the following combinations only. Between A and B, Between C and D, Between E and F
Extent of the change in the wiring position (3) 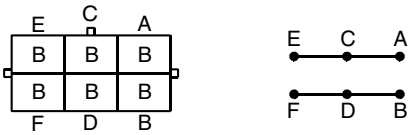	• The wiring position can be exchanged according to the following combinations only. Between A, C and E, Between B, D and F

Abbreviations used in this booklet

3GR	Third Gear
4GR	Fourth Gear
A	Ampere
A/C	Air Conditioning
A/F	Air Fuel
A/R	Auto Reverse
AAS	Auto Adjusting Suspension
ABS	Anti-lock Braking System
ACC	Accessories
ACV	Air Control Valve
ADD	Additional
AIR	Secondary Air Injection
AIS	Air Injection System
ALL	Automatic Load Leveling
AM	Amplitude Modulation
AMP	Amplifier
ANT	Antenna
AP	Accelerator Pedal
AS	Autoshop
ASV	Air Supply Valve
AT	Automatic Transmission
ATX	Automatic Transaxle
B+	Battery Positive Voltage
BAC	Bypass Air Control
BARO	Barometric Pressure
CAC	Charge Air Cooler
CARB	Carburetor

CCT	Circuit
CIGAR	Cigarette
CIS	Continuous Fuel Injection System
CKP	Crankshaft Position Sensor
CLS	Closed Loop System
CMP	Camshaft Position Sensor
COMBI	Combination
CON	Conditioner
CONT	Control
CPU	Central Processing Unit
CSD	Cold Start Device
CTP	Closed Throttle Position
DEF	Defroster
DI	Distributor Ignition
DIS	Drive Information System
DLC	Data Link Connector
DLI	Distributorless Ignition
DOHC	Double-Overhead Camshaft
DTC	Diagnostic Trouble Code(s)
DTM	Diagnostic Test Mode
ECPS	Electronically Controlled Power Steering
ECT	Engine Control Temperature
EGR	Exhaust Gas Recirculation
EI	Electronic Ignition
ELEC	Electric
ELR	Emergency Locking Retractor
ETR	Electronic Tuner

F	Front
F/I	Fuel Injector
FC	Fan Control
FICB	Fast-Idle Cam Breaker
FM	Frequency Modulation
FP	Fuel Pump
FPR	Fuel Pump Relay
GEN	Generator
GND	Ground
H/D	Heater/Defroster
HEAT	Heater
HEI	High-Energy Ignition
HI	High
HO2S	Heated Oxygen Sensor
IAC	Idle Air Control
IAT	Intake Air Temperature
ICM	Ignition Control Module
IG	Ignition
ILLUMI	Illumination
INT	Intermittent
JB	Joint Box
KS	Knock Sensor
LCD	Liquid Crystal Display
LF	Left Front
LH	Left Hand
LO	Low
LR	Left Rear
M	Motor
MAF	Mass Air Flow Sensor
MAP	Manifold Absolute Pressure
MFI	Multiport Fuel Injection
MID	Middle
MIL	Malfunction Indicator Lamp
MIN	Minute
MIX	Mixture
MPX	Multiplex
MT	Manual Transmission
MTR	Mechanical Tuning Radio
MTX	Manual Transaxle
NC	Normally Closed
NO	Normally Open
O2S	Oxygen Sensor
OBD	On-board Diagnostic
OFF	Switch Off
ON	Switch On
OSC	Oscillator

P	Power
P/S	Power Steering
P/W CU	Power Window Control Unit
PAIR	Pulsed Secondary Air Injection
PCM	Powertrain Control Module
PNP	Park/Neutral Position
PRCV	Pressure Regulator Control Solenoid Valve
PRG	Purge Solenoid Valve
PSP	Power Steering Pressure
PTC	Positive Temperature Coefficient Heater
QSS	Quick-Start System
R	Rear
REC	Recirculation
RF	Right Front
RH	Right Hand
RPM	Engine Speed
RR	Right Rear
SAPV	Secondary Air Pulse Valve
SFI	Sequential Multipoint Fuel Injection
SOL	Solenoid
SPV	Spill Valve
ST	Start
SW	Switch
TC	Turbocharger
TCM	Transmission(Transaxle)Control Module
TCS	Traction control system
TCV	Twin Scroll Turbocharger Solenoid Valve
TEMP	Temperature
TDC	Top dead center
TICS	Triple Induction Control System
TP	Throttle Position Sensor
TR	Transmission Range
TR	Transmission(Transaxle)Range
TWS	Total Wiring System
V	Volt
VAF	Volume Air Flow Sensor
VENT	Ventilation
VOL	Volume
VR	Voltage Regulator
VRIS	Variable Resonance Induction System
VSS	Vehicle Speed Sensor
W	Watt(s)
WOT	Wide Open Throttle

GROUND POINT

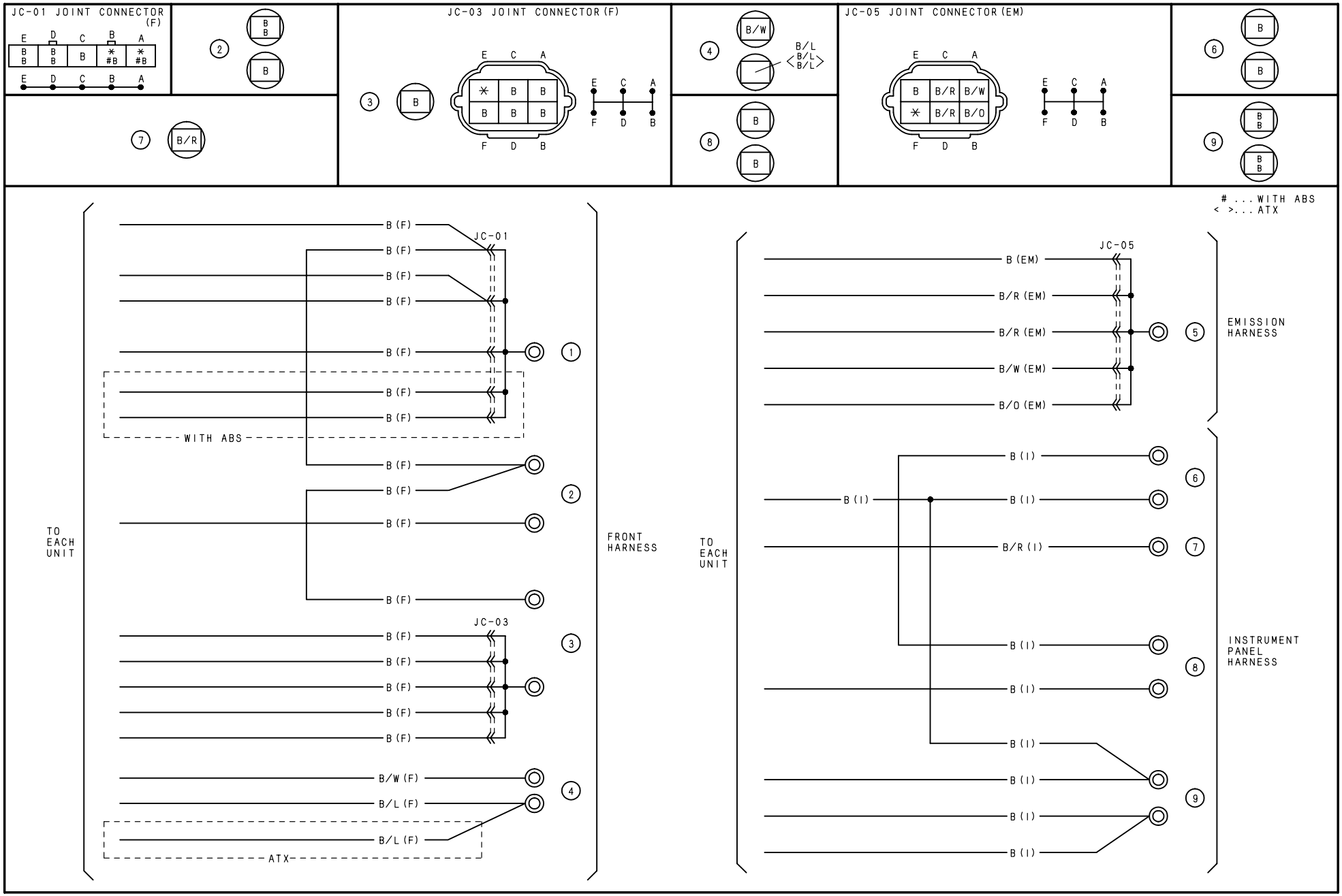

HARNESS SYMBOL: (F) (E) (R)

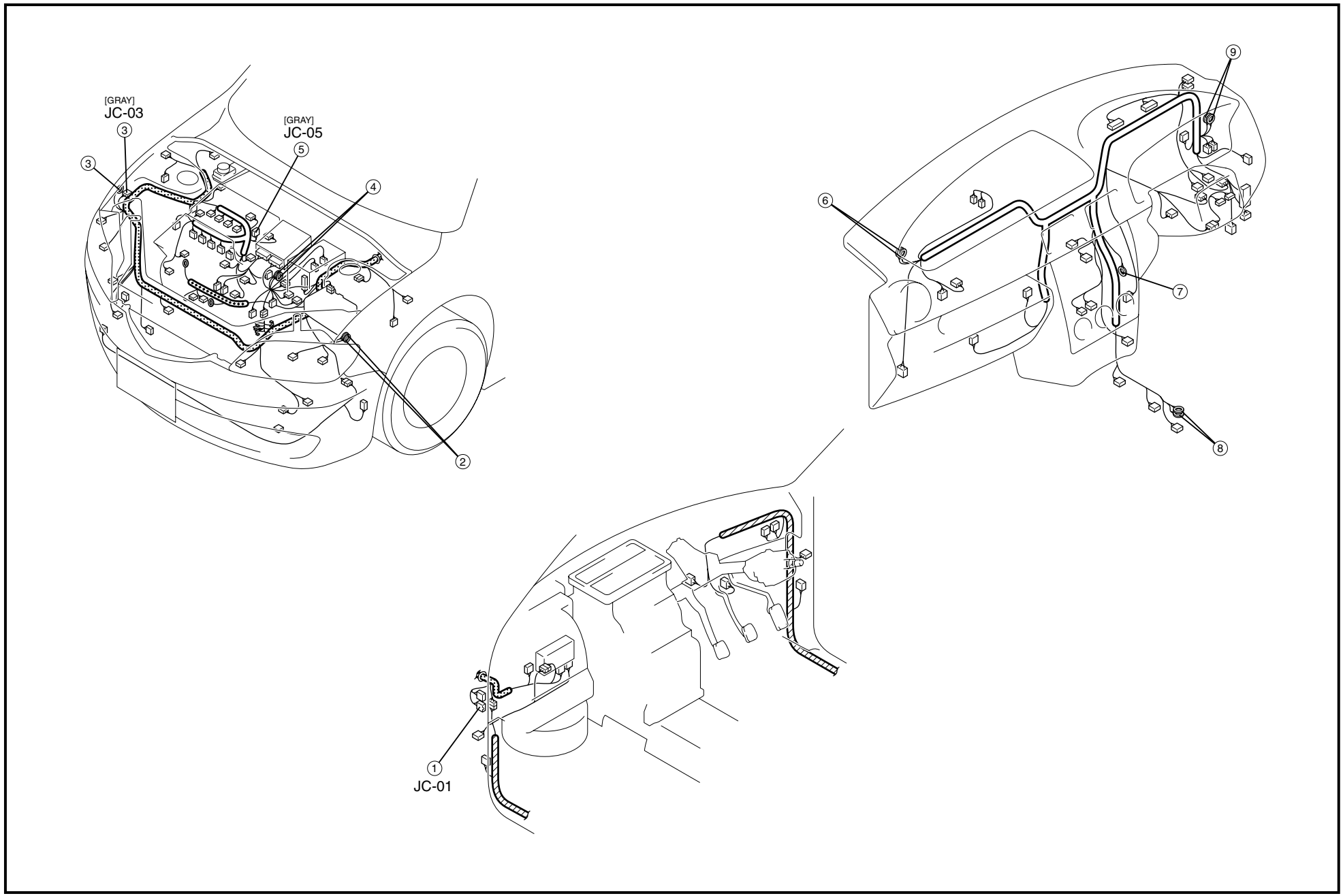

GROUND POINT

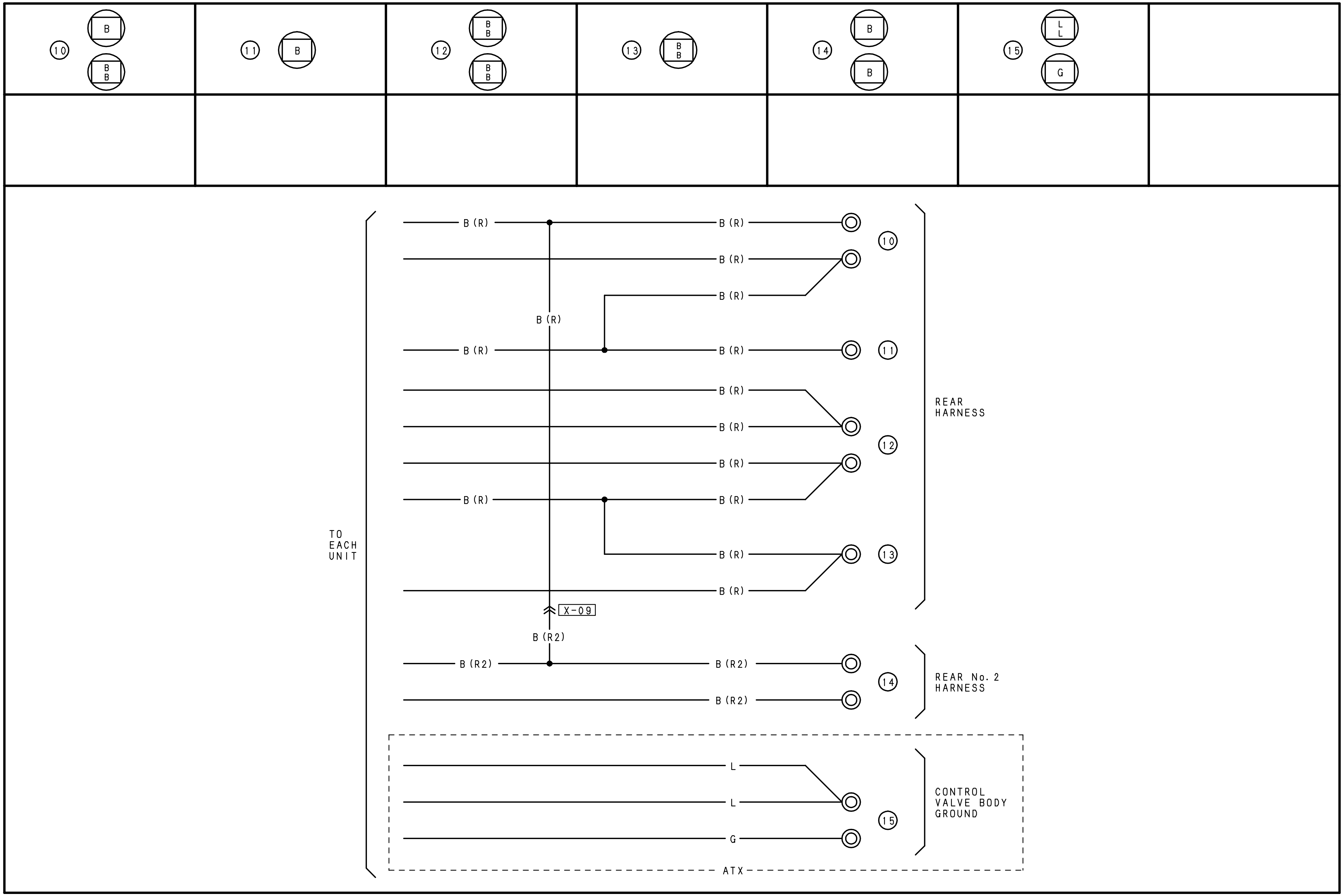

HARNESS SYMBOL: (F) (E) (R)

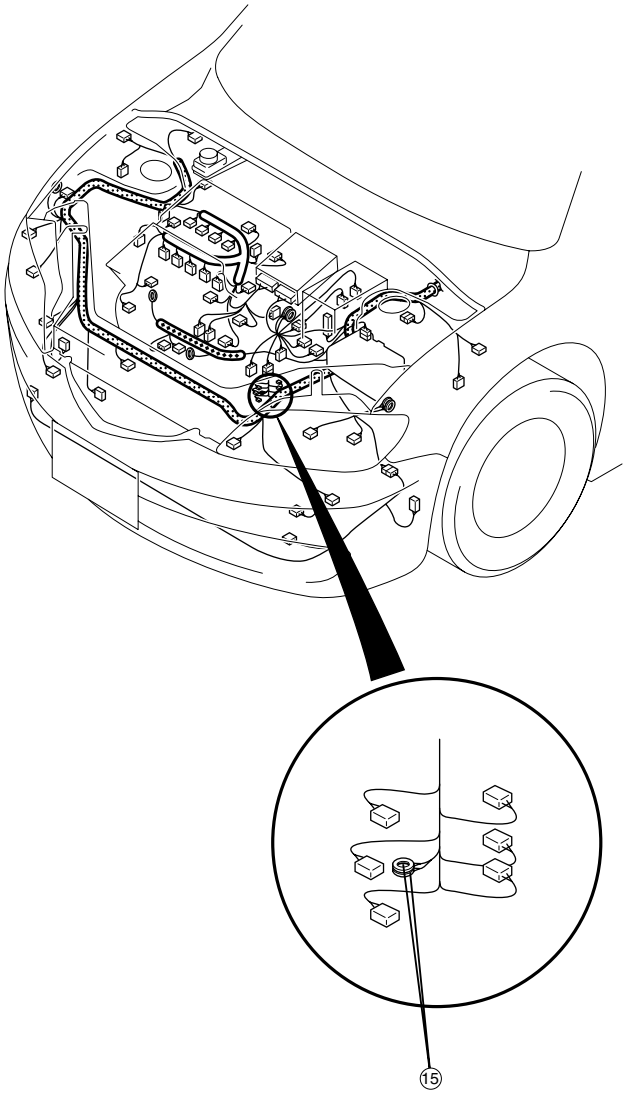

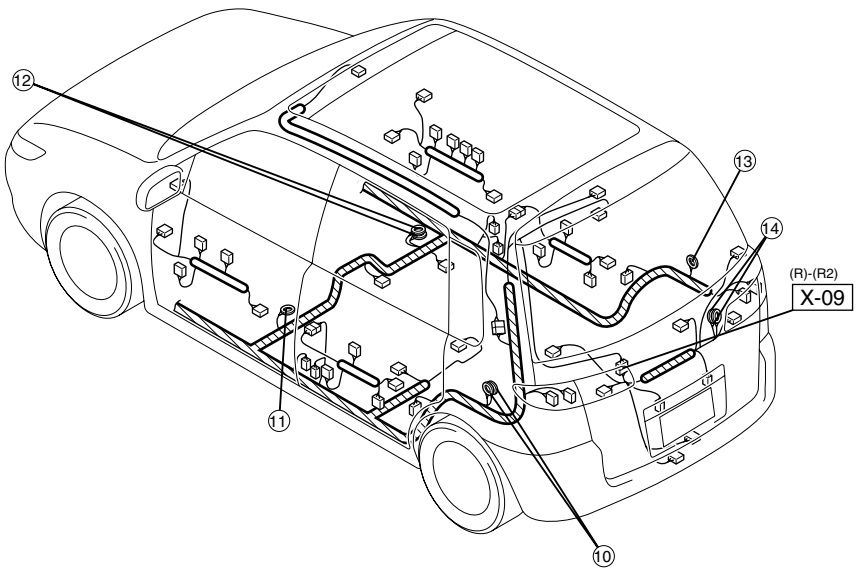

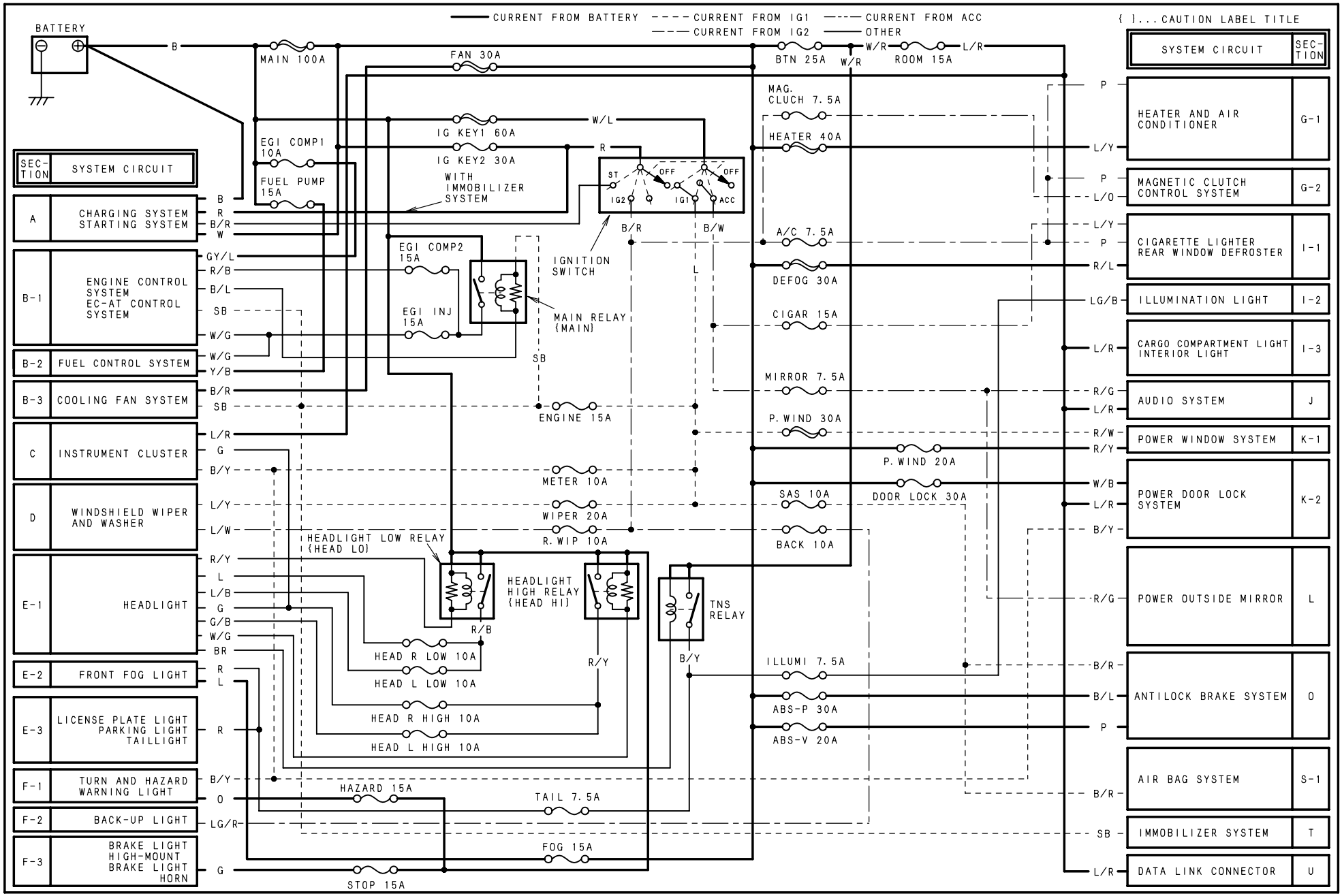
CURRENT FROM BATTERY
CURRENT FROM IG1
CURRENT FROM IG2
CURRENT FROM ACC
OTHER
{ }...CAUTION LABEL TITLE
BATTERY
MAIN 100A
FAN 30A
BTN 25A
ROOM 15A
MAG. CLUCH 7.5A
HEATER 40A
IG KEY1 60A
IG KEY2 30A
WITH IMMOBILIZER SYSTEM
EGI COMP1 10A
FUEL PUMP 15A
EGI COMP2 15A
EGI INJ 15A
IGNITION SWITCH
MAIN RELAY {MAIN}
A/C 7.5A
DEFOG 30A
CIGAR 15A
MIRROR 7.5A
P.WIND 30A
P.WIND 20A
DOOR LOCK 30A
SAS 10A
BACK 10A
ENGINE 15A
METER 10A
WIPER 20A
R.WIP 10A
HEADLIGHT LOW RELAY {HEAD LO}
HEADLIGHT HIGH RELAY {HEAD HI}
TNS RELAY
HEAD R LOW 10A
HEAD L LOW 10A
HEAD R HIGH 10A
HEAD L HIGH 10A
ILLUMI 7.5A
ABS-P 30A
ABS-V 20A
HAZARD 15A
TAIL 7.5A
FOG 15A
STOP 15A
SEC-TION
SYSTEM CIRCUIT
A CHARGING SYSTEM STARTING SYSTEM
B-1 ENGINE CONTROL SYSTEM EC-AT CONTROL SYSTEM
B-2 FUEL CONTROL SYSTEM
B-3 COOLING FAN SYSTEM
C INSTRUMENT CLUSTER
D WINDSHIELD WIPER AND WASHER
E-1 HEADLIGHT
E-2 FRONT FOG LIGHT
E-3 LICENSE PLATE LIGHT PARKING LIGHT TAILLIGHT
F-1 TURN AND HAZARD WARNING LIGHT
F-2 BACK-UP LIGHT
F-3 BRAKE LIGHT HIGH-MOUNT BRAKE LIGHT HORN
HEATER AND AIR CONDITIONER G-1
MAGNETIC CLUTCH CONTROL SYSTEM G-2
CIGARETTE LIGHTER REAR WINDOW DEFROSTER I-1
ILLUMINATION LIGHT I-2
CARGO COMPARTMENT LIGHT INTERIOR LIGHT I-3
AUDIO SYSTEM J
POWER WINDOW SYSTEM K-1
POWER DOOR LOCK SYSTEM K-2
POWER OUTSIDE MIRROR L
ANTILOCK BRAKE SYSTEM O
AIR BAG SYSTEM S-1
IMMOBILIZER SYSTEM T
DATA LINK CONNECTOR U

THIS PAGE INTENTIONALLY LEFT BLANK

CHARGING SYSTEM / STARTING SYSTEM

A

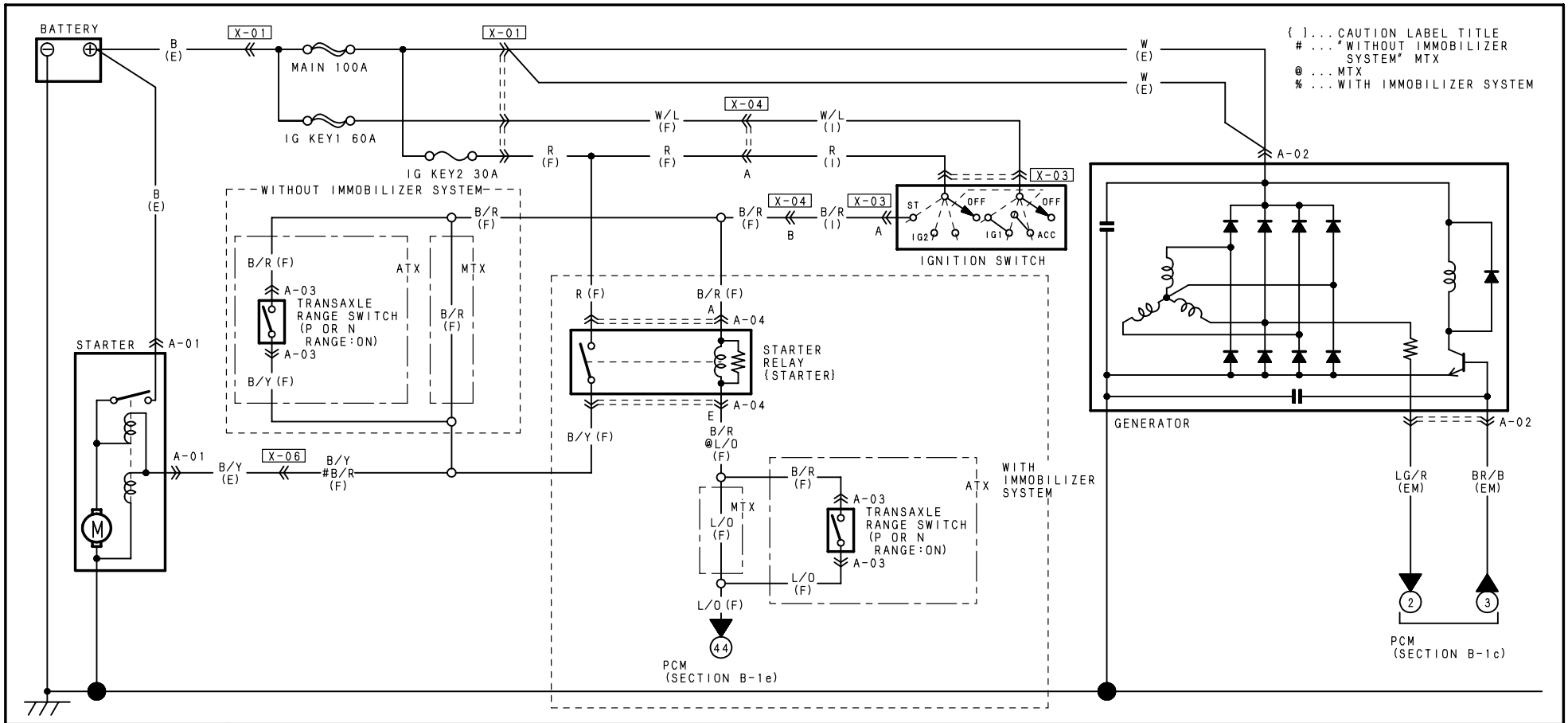

A-01 STARTER (E)

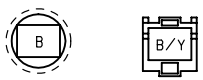

A-02 GENERATOR

A-03 TRANSAXLE RANGE SWITCH (F)

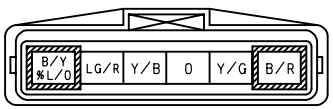

A-04 STARTER RELAY {STARTER} (F)

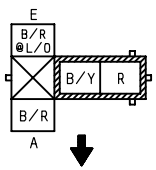

NOTE: THIS IS THE CONNECTOR AS SEEN FROM THE TERMINAL SIDE.

HARNESS SYMBOL: (F) (E) (R)

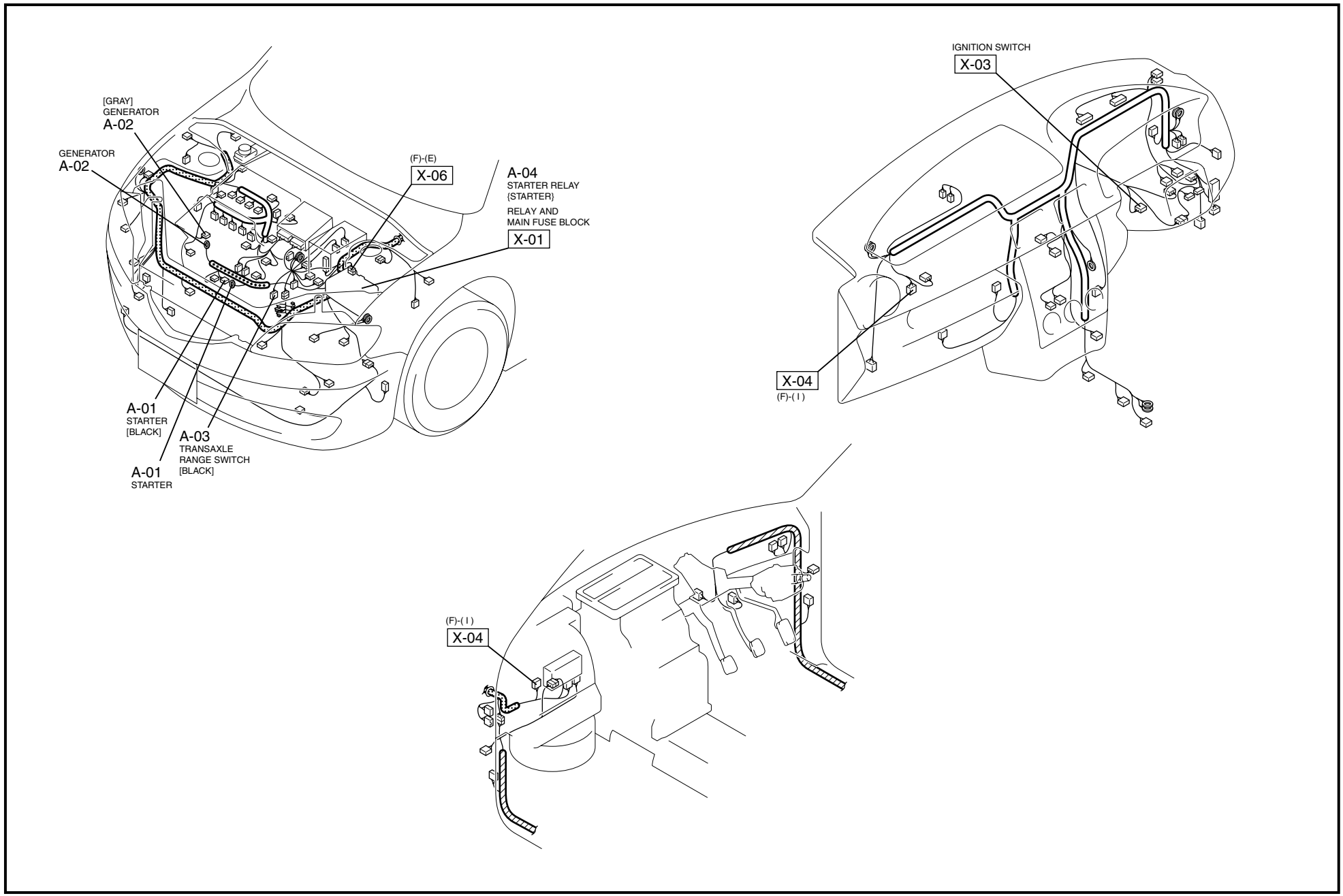

A

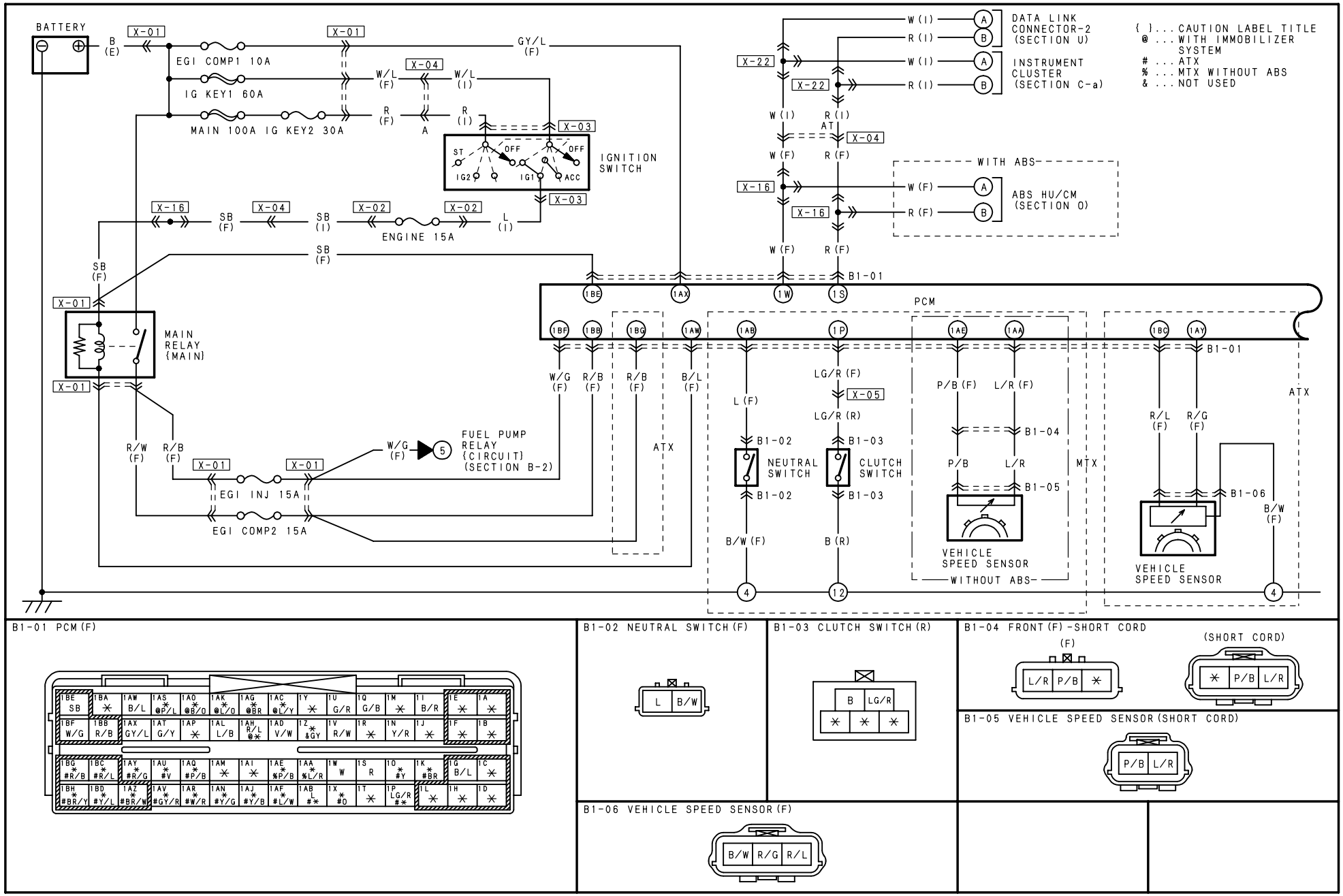
BATTERY
B (E)
X-01
EGI COMP1 10A
IG KEY1 60A
MAIN 100A IG KEY2 30A
GY/L (F)
W/L (F)
W/L (I)
X-04
R (F)
R (I)
A
X-03
ST
OFF
IG2
IG1
ACC
IGNITION SWITCH
X-16
SB (F)
SB (I)
X-02
ENGINE 15A
L (I)
MAIN RELAY (MAIN)
R/W (F)
R/B (F)
W/G (F)
FUEL PUMP RELAY (CIRCUIT) (SECTION B-2)
EGI INJ 15A
EGI COMP2 15A
W (I)
R (I)
X-22
DATA LINK CONNECTOR-2 (SECTION U)
INSTRUMENT CLUSTER (SECTION C-a)
AT
W (F)
R (F)
WITH ABS
ABS HU/CM (SECTION O)
B1-01
PCM
1BE
1AX
1W
1S
1BF
1BB
1BG
1AW
1AB
1P
1AE
1AA
1BC
1AY
W/G (F)
R/B (F)
B/L (F)
L (F)
LG/R (F)
LG/R (R)
X-05
P/B (F)
L/R (F)
R/L (F)
R/G (F)
B1-02
B1-03
B1-04
B1-05
B1-06
NEUTRAL SWITCH
CLUTCH SWITCH
P/B
L/R
B/W (F)
B (R)
B/W (F)
VEHICLE SPEED SENSOR
WITHOUT ABS
ATX
MTX
4
12
{ }...CAUTION LABEL TITLE
@ ...WITH IMMOBILIZER SYSTEM
# ...ATX
% ...MTX WITHOUT ABS
& ...NOT USED
B1-01 PCM(F)
B1-02 NEUTRAL SWITCH(F)
L
B/W
B1-03 CLUTCH SWITCH(R)
B
LG/R
B1-04 FRONT(F)-SHORT CORD
(F)
(SHORT CORD)
L/R
P/B
B1-05 VEHICLE SPEED SENSOR(SHORT CORD)
B1-06 VEHICLE SPEED SENSOR(F)
B/W
R/G
R/L

Applied VIN (assumed) :
JM0 DY10Y100 102043-
JM6 DY10J100 102153-
JM6 DY10Y100 102153-

Mazda2 Wiring Diagram (5567-1*-02J)

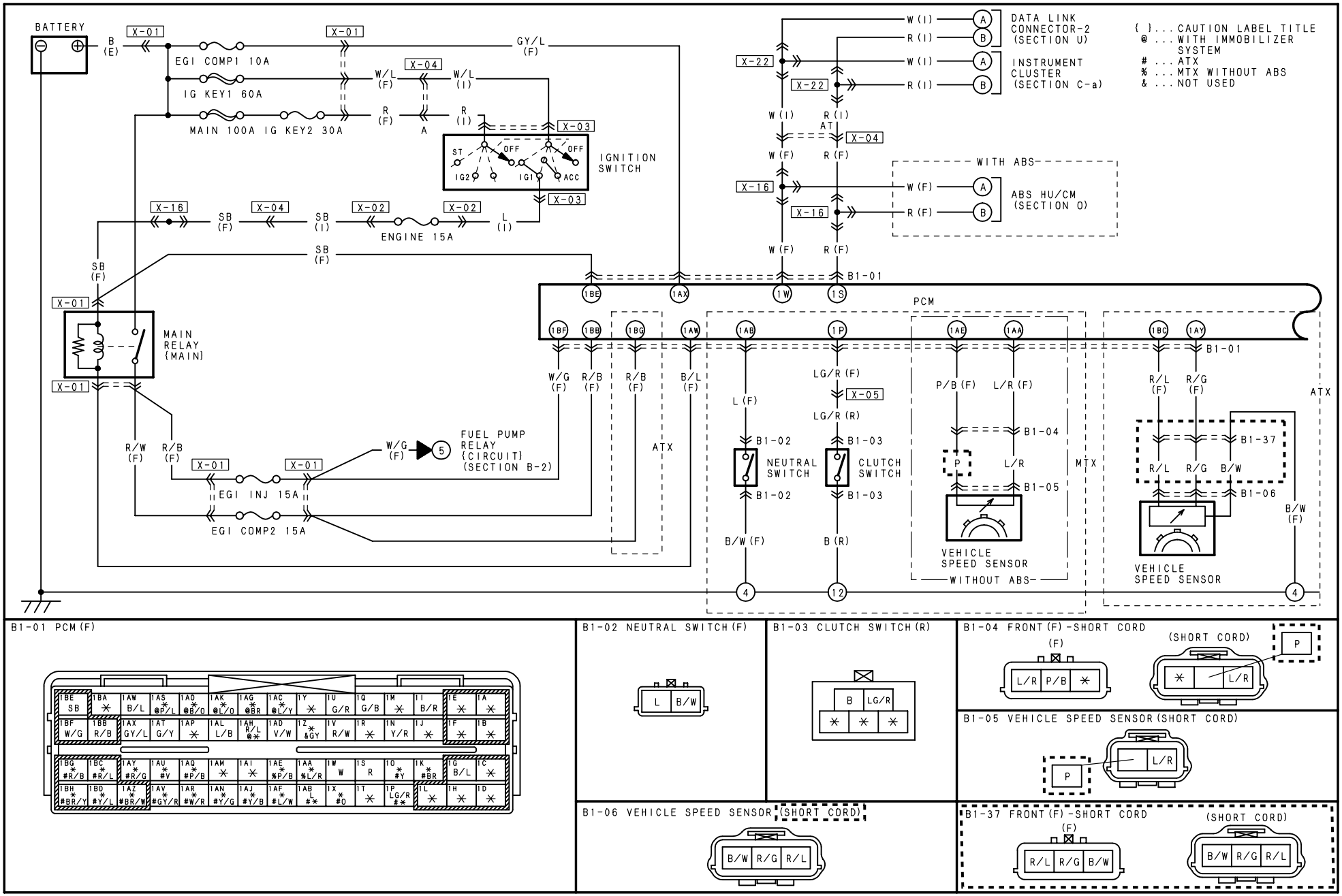

HARNESS SYMBOL: (F) (E) (R)

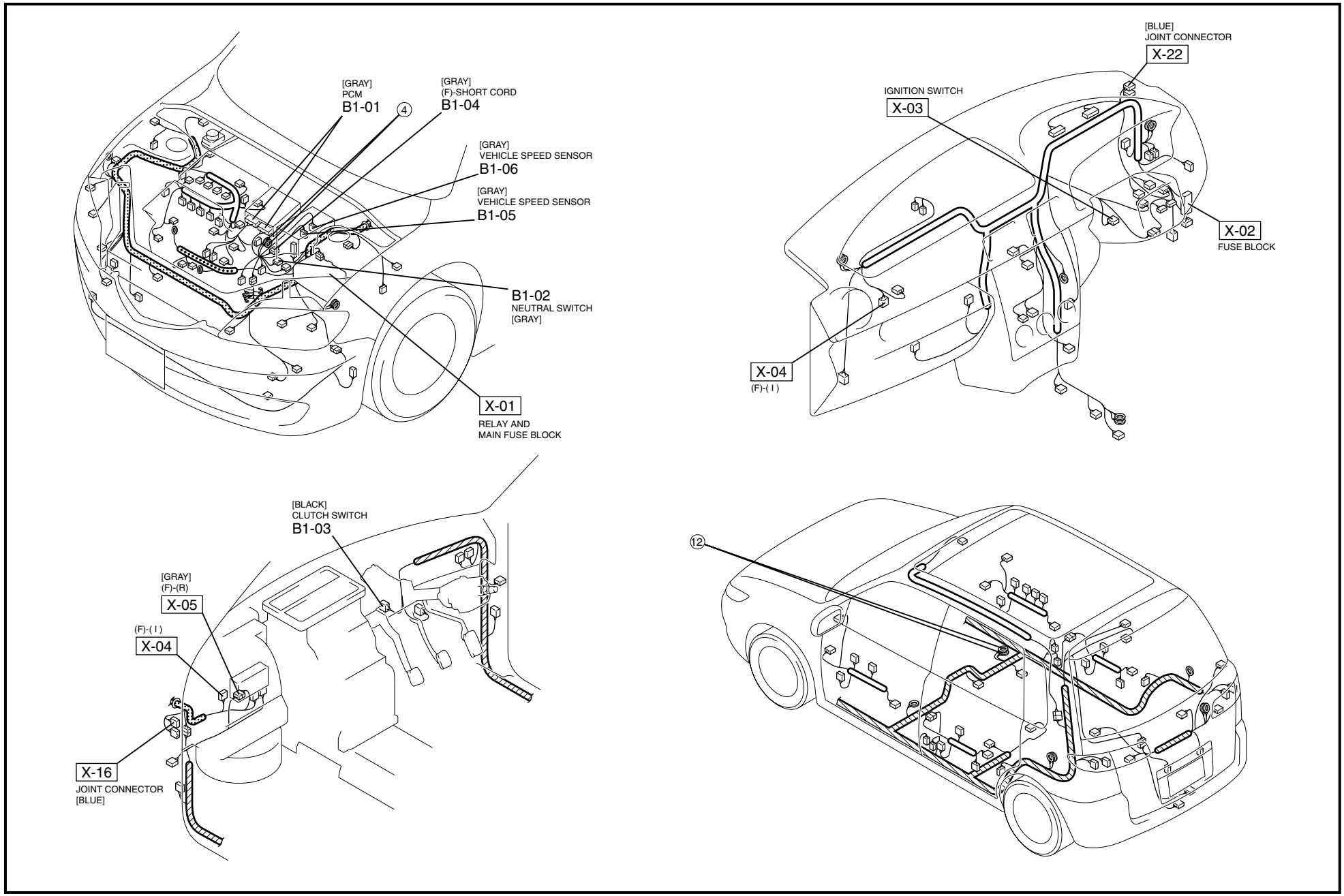

HARNESS SYMBOL: (F) (E) (R)

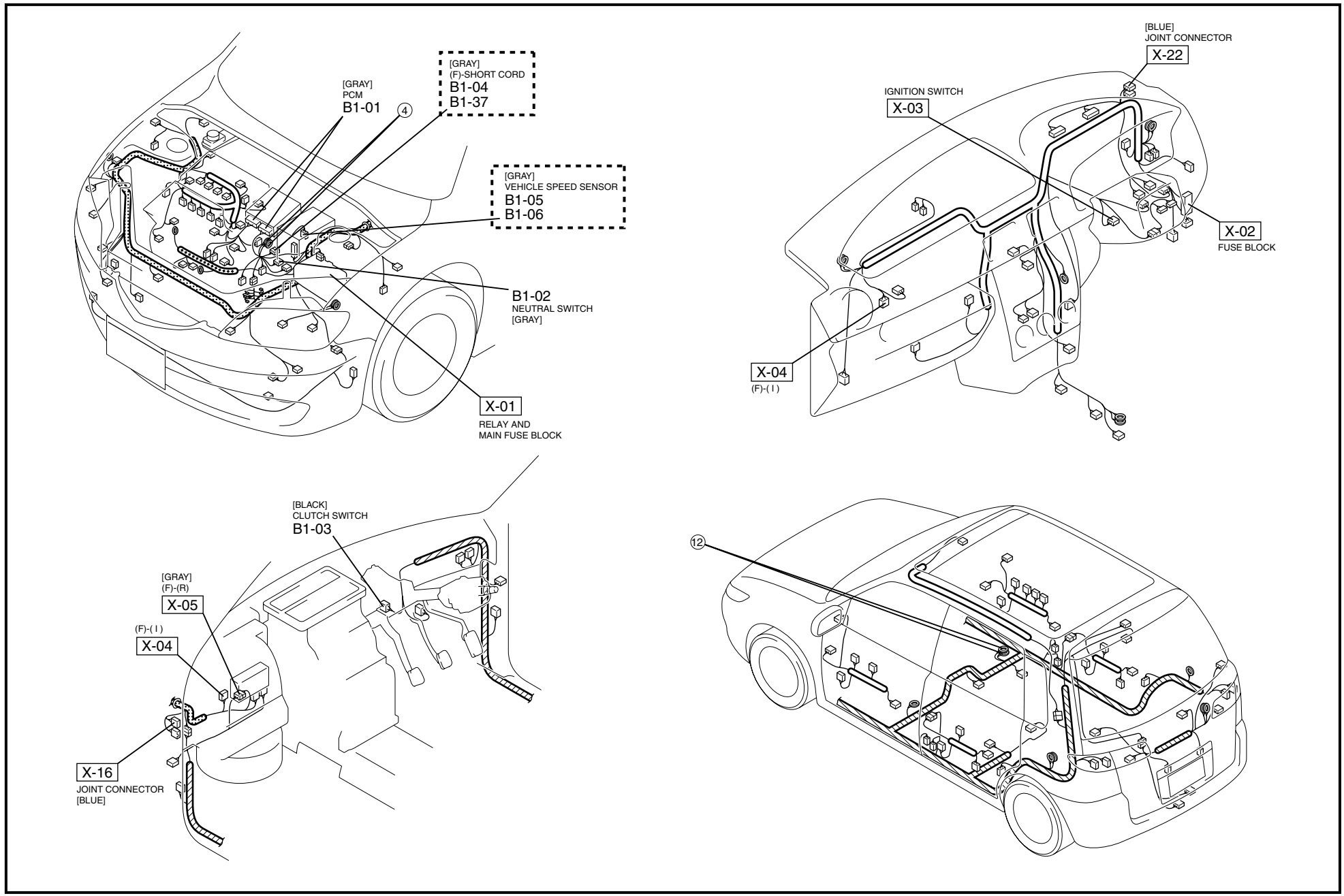

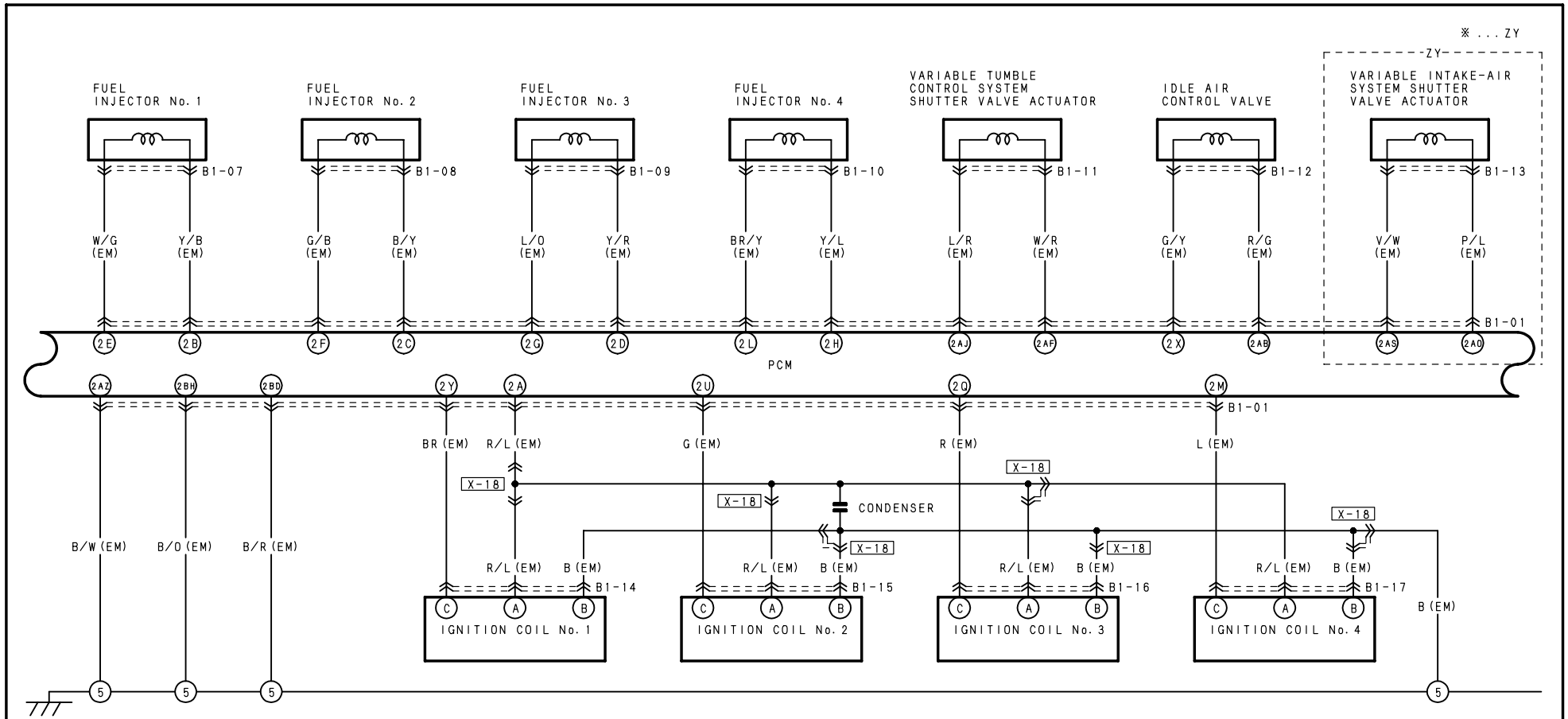

B1-01 PCM (EM)

2BE B	2BA W	2AW ✳	2AS ✳ ※V/W	2AQ ✳ ※P/L	2AK R/W	2AG GY/L	2AC BR/W	2Y BR	2U G	2Q R	2M L	2I ✳	2E W/G	2A R/L
2BF LG	2BB W/B	2AX L/W	2AT ✳	2AP ✳	2AL ✳	2AH ✳	2AD ✳	2Z ✳	2V ✳	2R ✳	2N ✳	2J W/L	2F G/B	2B Y/B
2BG G/L	2BC V	2AY Y/G	2AU O	2AQ L/B	2AM LG/B	2AI R/L	2AE L/Y	2AA BR/Y	2W P/B	2S ✳	2O ✳	2K ✳	2G L/O	2C B/Y
2BH B/O	2BD B/R	2AZ B/W	2AV GY	2AR LG/R	2AN BR/B	2AJ L/R	2AF W/R	2AB R/G	2X G/Y	2T R/B	2P P	2L BR/Y	2H Y/L	2D Y/R

B1-07 FUEL INJECTOR No. 1 (EM)

B1-08 FUEL INJECTOR No. 2 (EM)

B1-09 FUEL INJECTOR No. 3 (EM)

B1-10 FUEL INJECTOR No. 4 (EM)

B1-14 IGNITION COIL No. 1 (EM)

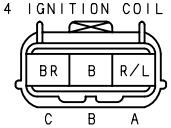

B1-15 IGNITION COIL No. 2 (EM)

B1-16 IGNITION COIL No. 3 (EM)

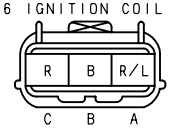

B1-17 IGNITION COIL No. 4 (EM)

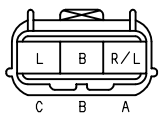

B1-11 VARIABLE TUMBLE CONTROL SYSTEM SHUTTER VALVE ACTUATOR (EM)

B1-12 IDLE AIR CONTROL VALVE (EM)

B1-13 VARIABLE INTAKE-AIR SYSTEM SHUTTER VALVE ACTUATOR (EM)

HARNESS SYMBOL: (F) (E) (R)

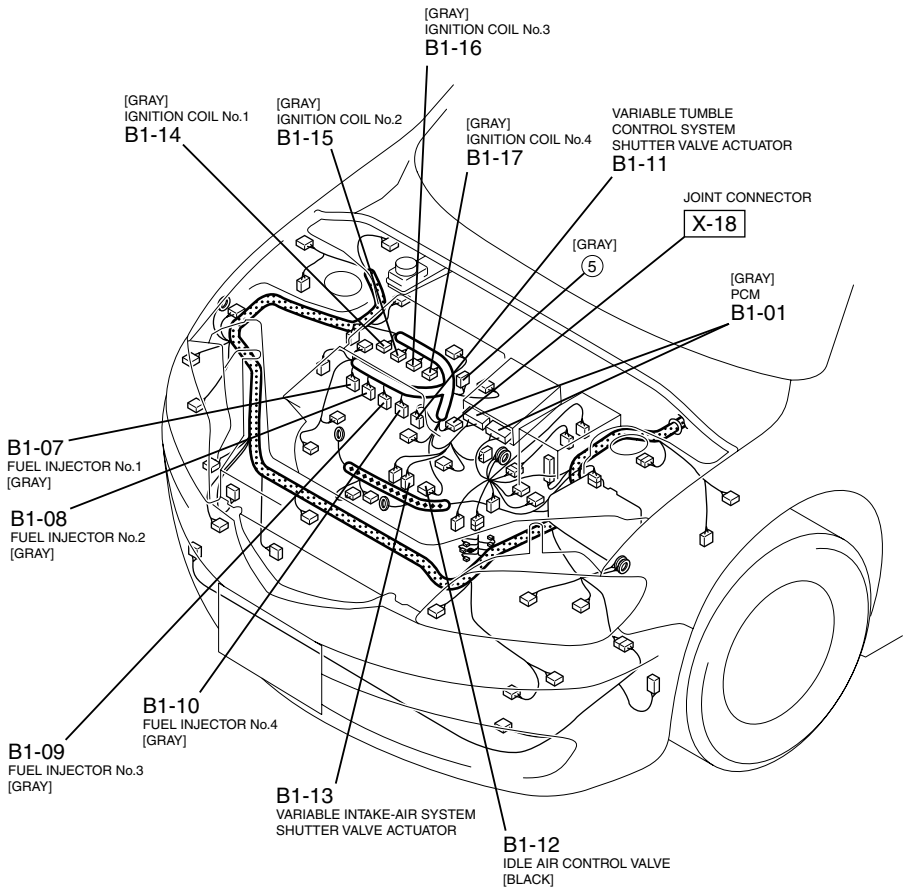

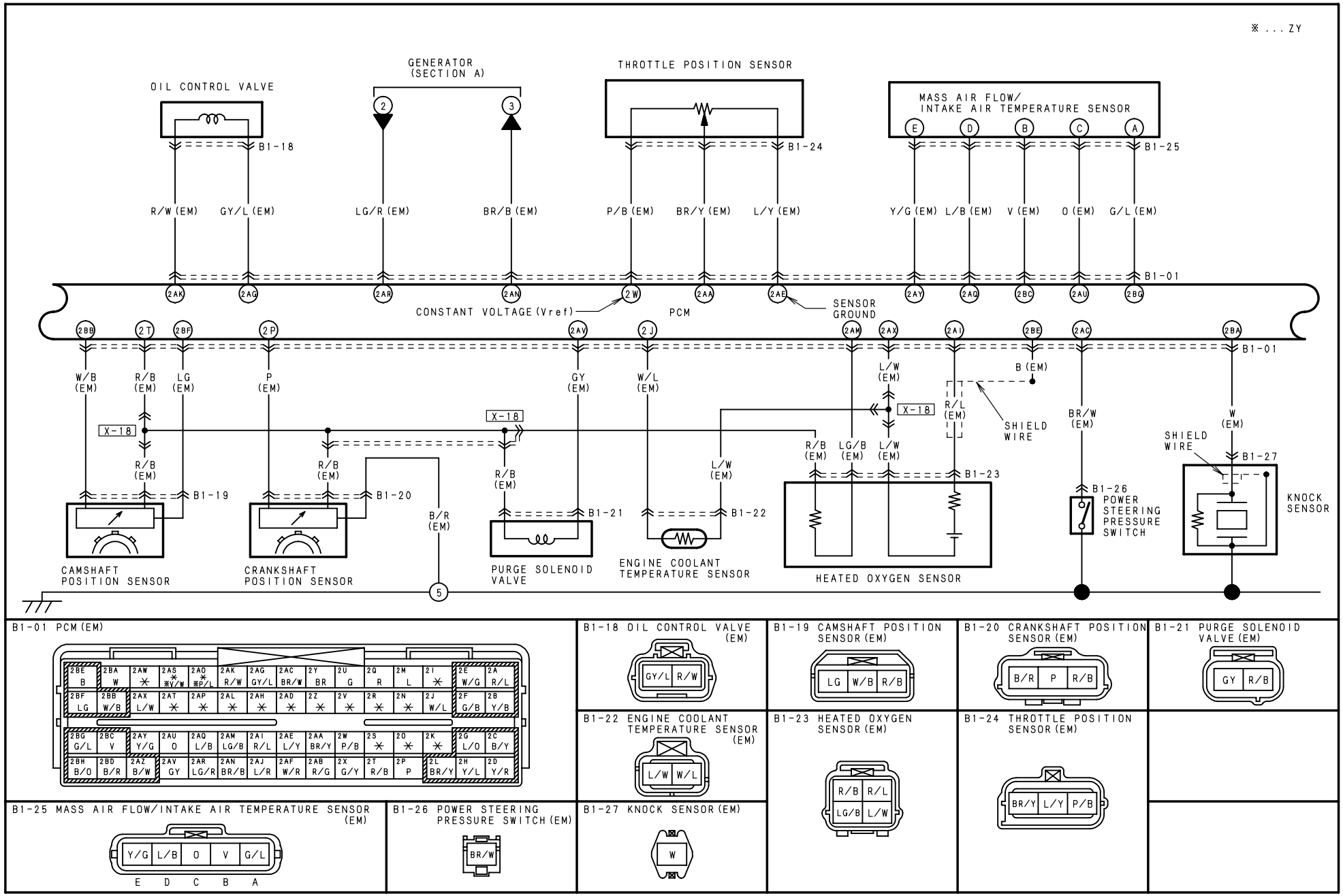
※ . . . ZY
OIL CONTROL VALVE
GENERATOR (SECTION A)
THROTTLE POSITION SENSOR
MASS AIR FLOW/ INTAKE AIR TEMPERATURE SENSOR
B1-18
B1-24
B1-25
R/W (EM)
GY/L (EM)
LG/R (EM)
BR/B (EM)
P/B (EM)
BR/Y (EM)
L/Y (EM)
Y/G (EM)
L/B (EM)
V (EM)
O (EM)
G/L (EM)
B1-01
CONSTANT VOLTAGE (Vref)
PCM
SENSOR GROUND
W/B (EM)
R/B (EM)
LG (EM)
P (EM)
GY (EM)
W/L (EM)
L/W (EM)
B (EM)
R/L (EM)
BR/W (EM)
W (EM)
X-18
SHIELD WIRE
B1-19
B1-20
B1-21
B1-22
B1-23
B1-26
B1-27
B/R (EM)
POWER STEERING PRESSURE SWITCH
KNOCK SENSOR
CAMSHAFT POSITION SENSOR
CRANKSHAFT POSITION SENSOR
PURGE SOLENOID VALVE
ENGINE COOLANT TEMPERATURE SENSOR
HEATED OXYGEN SENSOR
B1-01 PCM (EM)
B1-18 OIL CONTROL VALVE (EM)
B1-19 CAMSHAFT POSITION SENSOR (EM)
B1-20 CRANKSHAFT POSITION SENSOR (EM)
B1-21 PURGE SOLENOID VALVE (EM)
B1-22 ENGINE COOLANT TEMPERATURE SENSOR (EM)
B1-23 HEATED OXYGEN SENSOR (EM)
B1-24 THROTTLE POSITION SENSOR (EM)
B1-25 MASS AIR FLOW/INTAKE AIR TEMPERATURE SENSOR (EM)
B1-26 POWER STEERING PRESSURE SWITCH (EM)
B1-27 KNOCK SENSOR (EM)

HARNESS SYMBOL: (F) (E) (R)

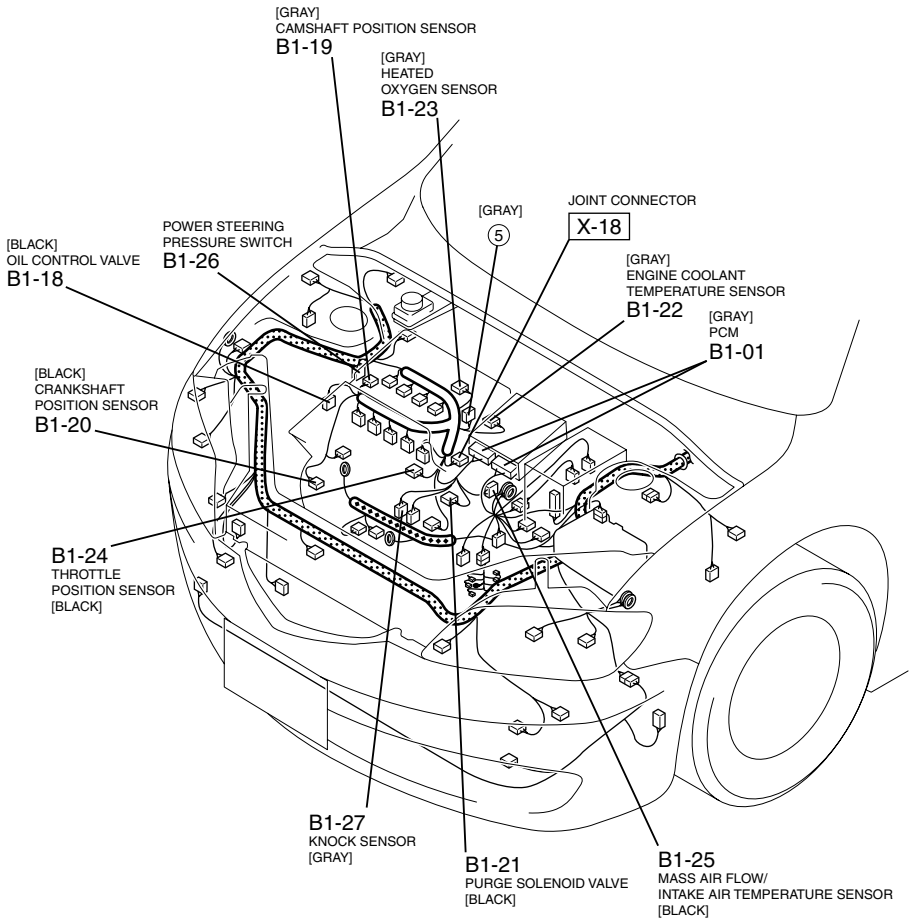

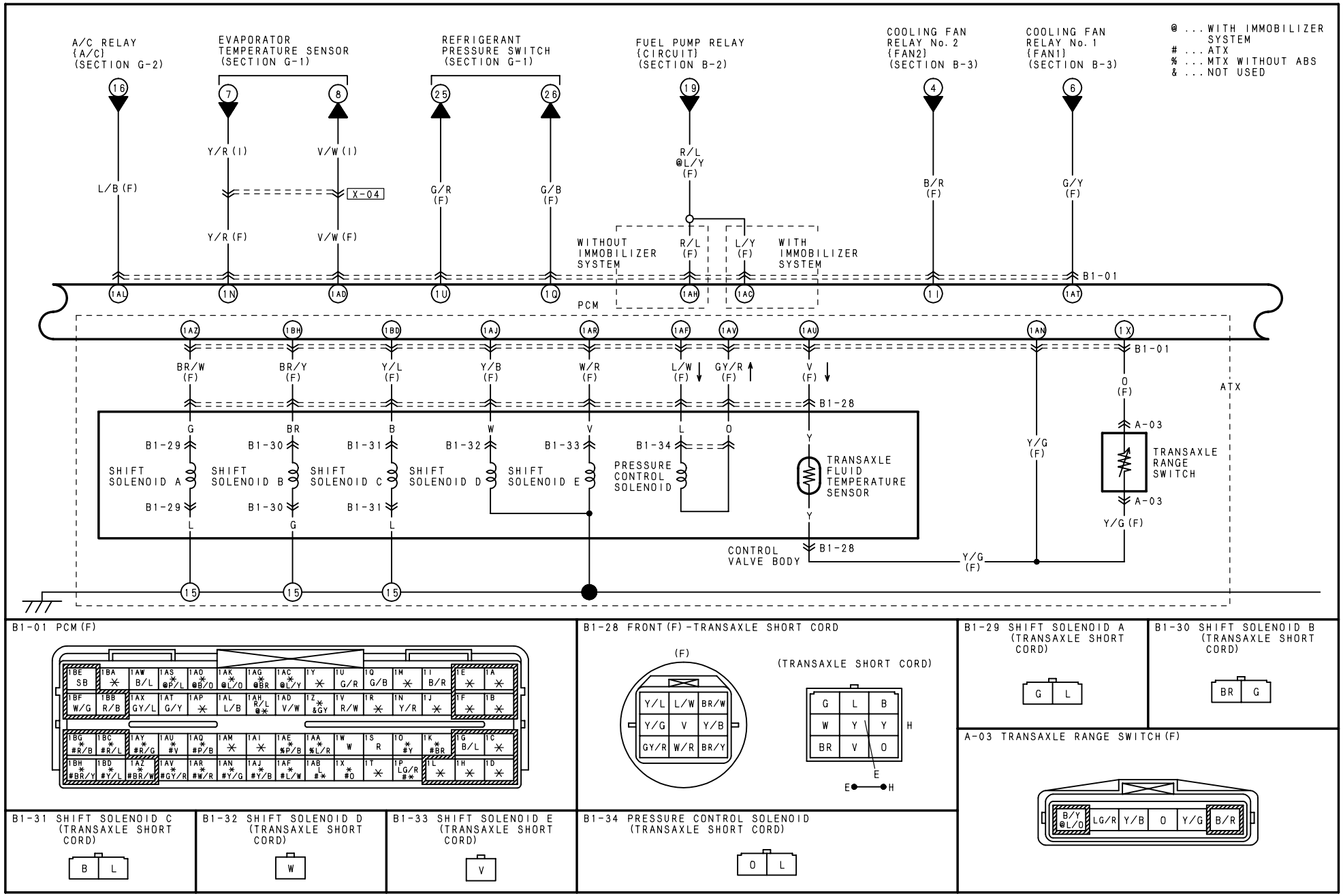
@ ...WITH IMMOBILIZER SYSTEM
# ...ATX
% ...MTX WITHOUT ABS
& ...NOT USED
A/C RELAY (A/C) (SECTION G-2)
EVAPORATOR TEMPERATURE SENSOR (SECTION G-1)
REFRIGERANT PRESSURE SWITCH (SECTION G-1)
FUEL PUMP RELAY (CIRCUIT) (SECTION B-2)
COOLING FAN RELAY No. 2 (FAN2) (SECTION B-3)
COOLING FAN RELAY No. 1 (FAN1) (SECTION B-3)
L/B (F)
Y/R (I)
V/W (I)
X-04
Y/R (F)
V/W (F)
G/R (F)
G/B (F)
R/L @L/Y (F)
B/R (F)
G/Y (F)
WITHOUT IMMOBILIZER SYSTEM
R/L (F)
L/Y (F)
WITH IMMOBILIZER SYSTEM
B1-01
PCM
BR/W (F)
BR/Y (F)
Y/L (F)
Y/B (F)
W/R (F)
L/W (F)
GY/R (F)
V (F)
B1-28
O (F)
ATX
A-03
B1-29
B1-30
B1-31
B1-32
B1-33
B1-34
SHIFT SOLENOID A
SHIFT SOLENOID B
SHIFT SOLENOID C
SHIFT SOLENOID D
SHIFT SOLENOID E
PRESSURE CONTROL SOLENOID
TRANSAXLE FLUID TEMPERATURE SENSOR
TRANSAXLE RANGE SWITCH
Y/G (F)
CONTROL VALVE BODY
B1-01 PCM (F)
B1-28 FRONT (F) -TRANSAXLE SHORT CORD
(F)
(TRANSAXLE SHORT CORD)
B1-29 SHIFT SOLENOID A (TRANSAXLE SHORT CORD)
B1-30 SHIFT SOLENOID B (TRANSAXLE SHORT CORD)
A-03 TRANSAXLE RANGE SWITCH (F)
B1-31 SHIFT SOLENOID C (TRANSAXLE SHORT CORD)
B1-32 SHIFT SOLENOID D (TRANSAXLE SHORT CORD)
B1-33 SHIFT SOLENOID E (TRANSAXLE SHORT CORD)
B1-34 PRESSURE CONTROL SOLENOID (TRANSAXLE SHORT CORD)

HARNESS SYMBOL: (F) (E) (R)

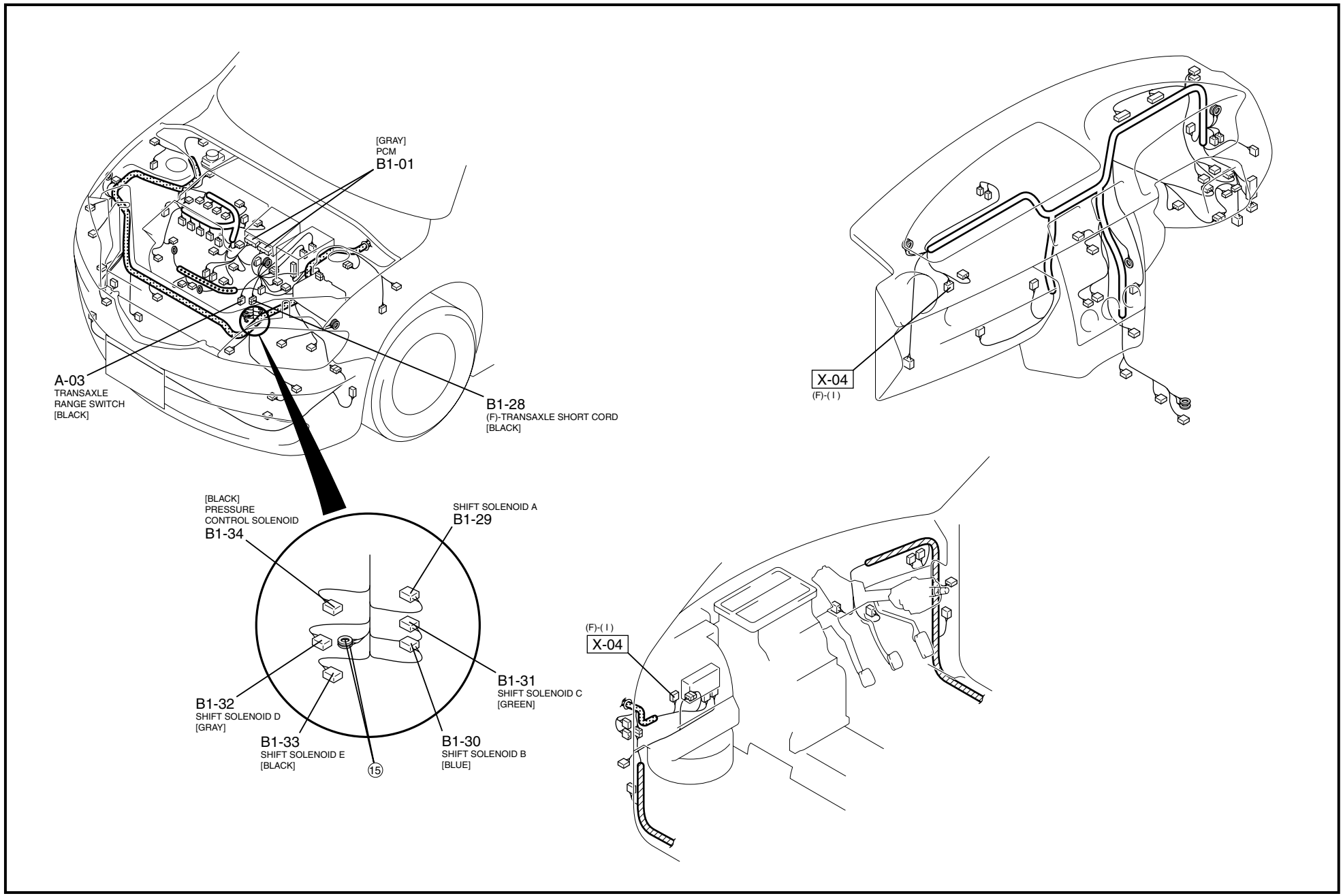

@ ... WITH IMMOBILIZER SYSTEM
# ... ATX
% ... MTX WITHOUT ABS
& ... NOT USED

INSTRUMENT CLUSTER (SECTION C-d)

COIL (SECTION T)

TRANSAXLE RANGE SWITCH ←ATX
STARTER RELAY (STARTER) ←MTX
(SECTION A)

BRAKE SWITCH (SECTION F-3)

WITH IMMOBILIZER SYSTEM

28 39 40 44 17

BR (F) B/O (F) P/L (F) L/O (F) R/W (F)

B1-01

1AG 1AO 1AS 1AK 1V

PCM

1G 1O 1K 1AQ

B1-01

P/B (F)

Y (F) BR (F) SHIELD WIRE

X-04

P/B (I)

B/L (F) B/L (F)

B1-36

HOLD SWITCH

ATX

B1-36

B1-35

INPUT/TURBINE SPEED SENSOR

B (I) X-20 B (I)

4 9

B1-01 PCM (F)

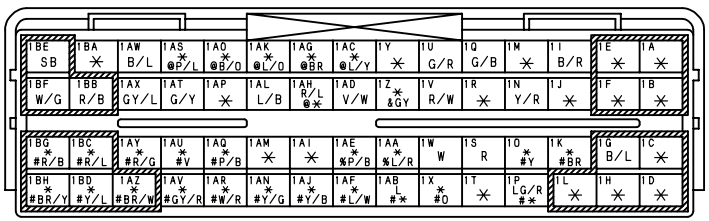

B1-35 INPUT/TURBINE SPEED SENSOR (F)

B1-36 HOLD SWITCH (I)

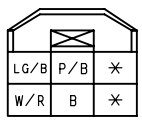

HARNESS SYMBOL: (F) (E) (R)

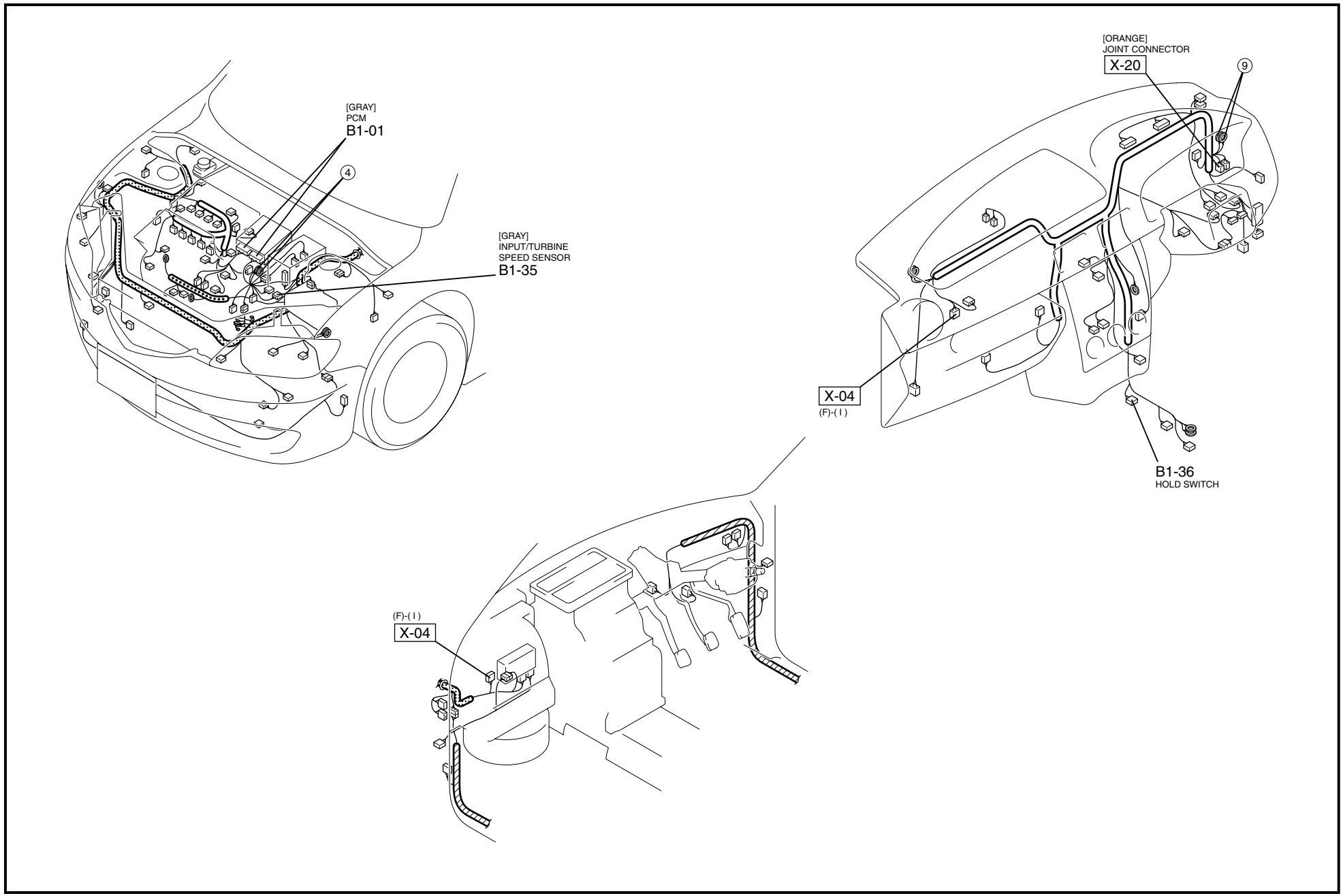

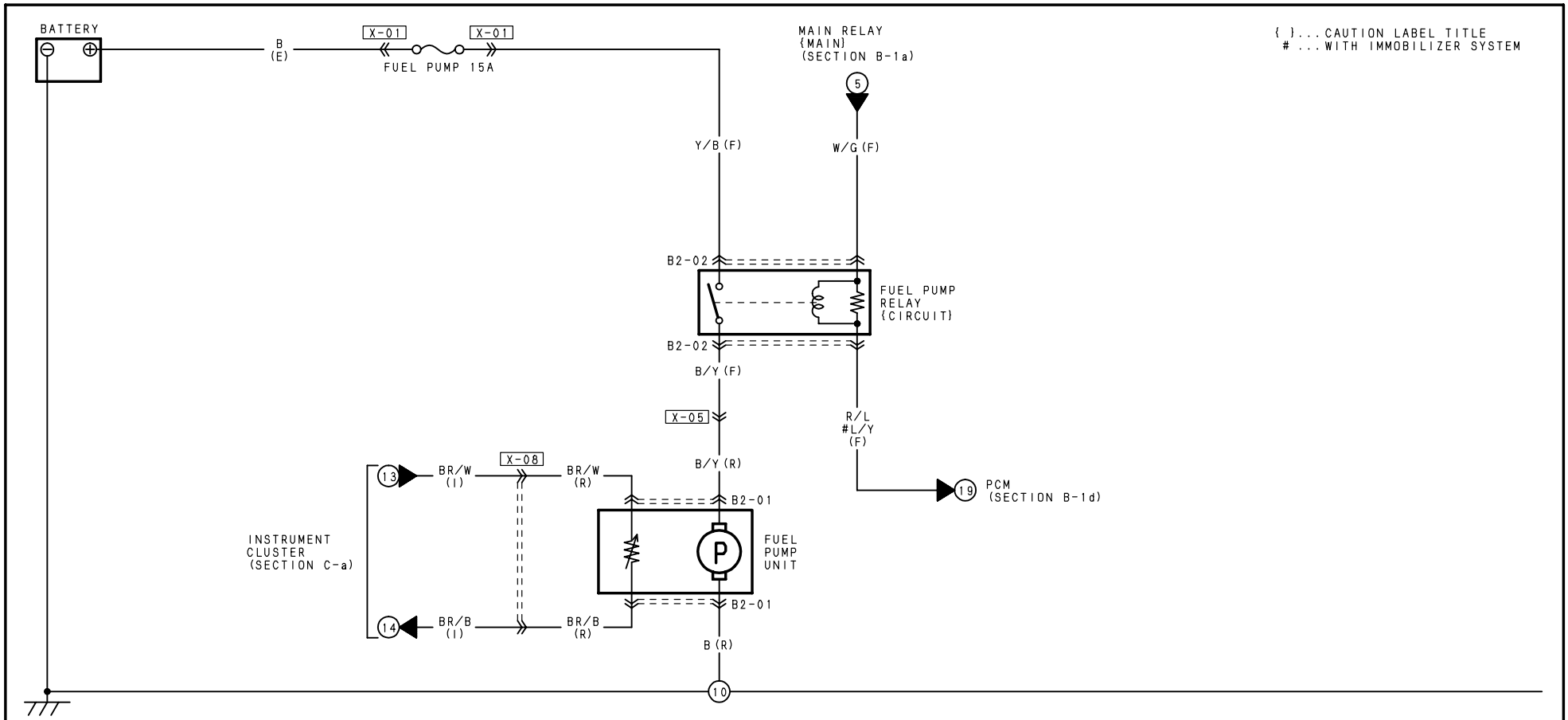

B2-01 FUEL PUMP UNIT (R)

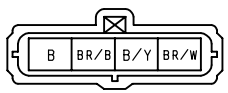

B2-02 FUEL PUMP RELAY {CIRCUIT} (F)

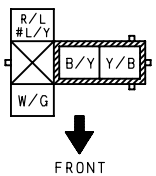

NOTE: THIS IS THE CONNECTOR AS SEEN FROM THE TERMINAL SIDE.

HARNESS SYMBOL: (F) (E) (R)

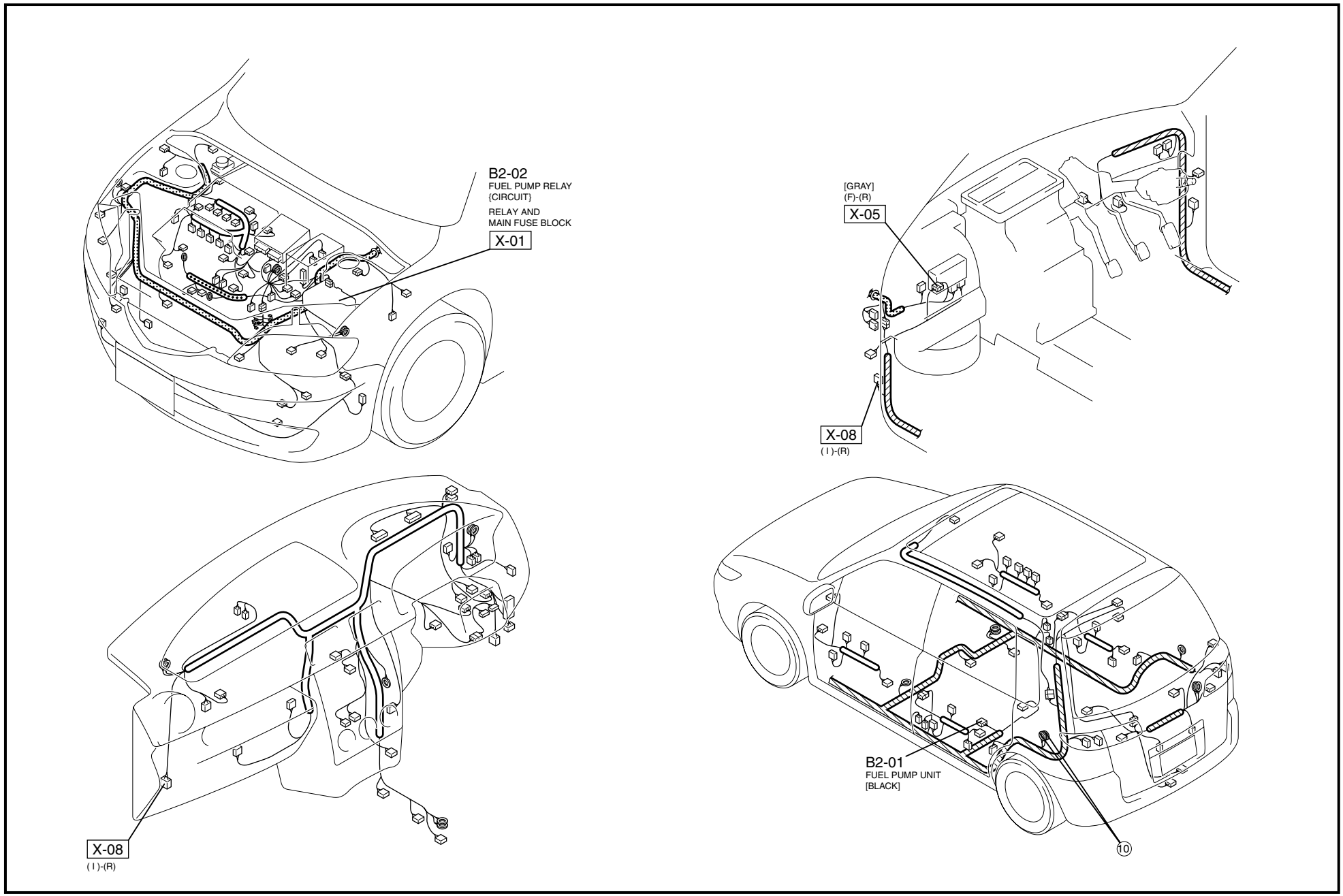

COOLING FAN SYSTEM

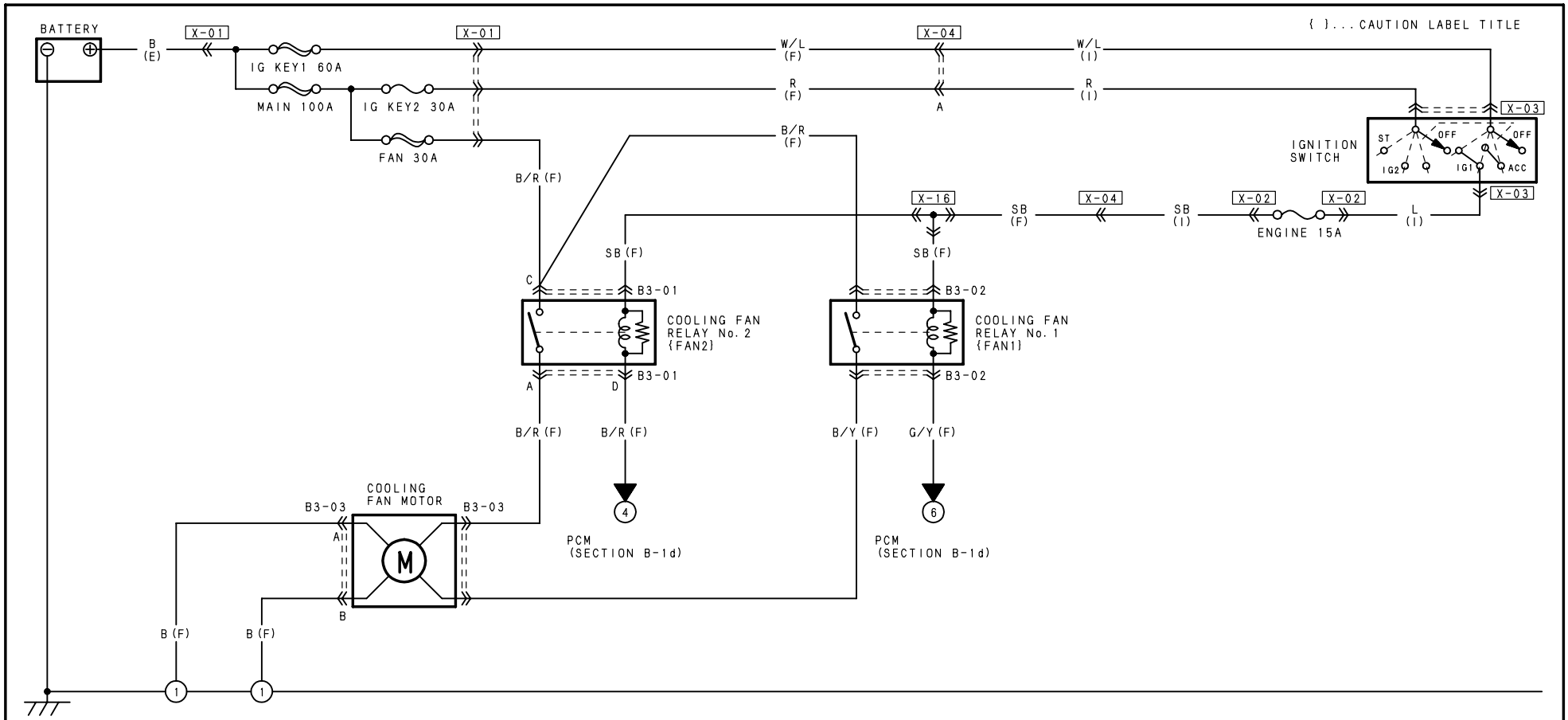

B3-01 COOLING FAN RELAY No. 2 {FAN2} (F)

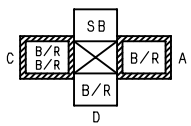

FRONT

NOTE:THIS IS THE CONNECTOR AS SEEN FROM THE TERMINAL SIDE.

B3-02 COOLING FAN RELAY No. 1{FAN1} (F)

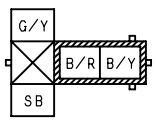

FRONT

NOTE:THIS IS THE CONNECTOR AS SEEN FROM THE TERMINAL SIDE.

B3-03 COOLING FAN MOTOR (F)

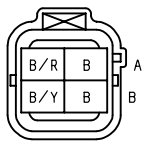

HARNESS SYMBOL: (F) (E) (R)

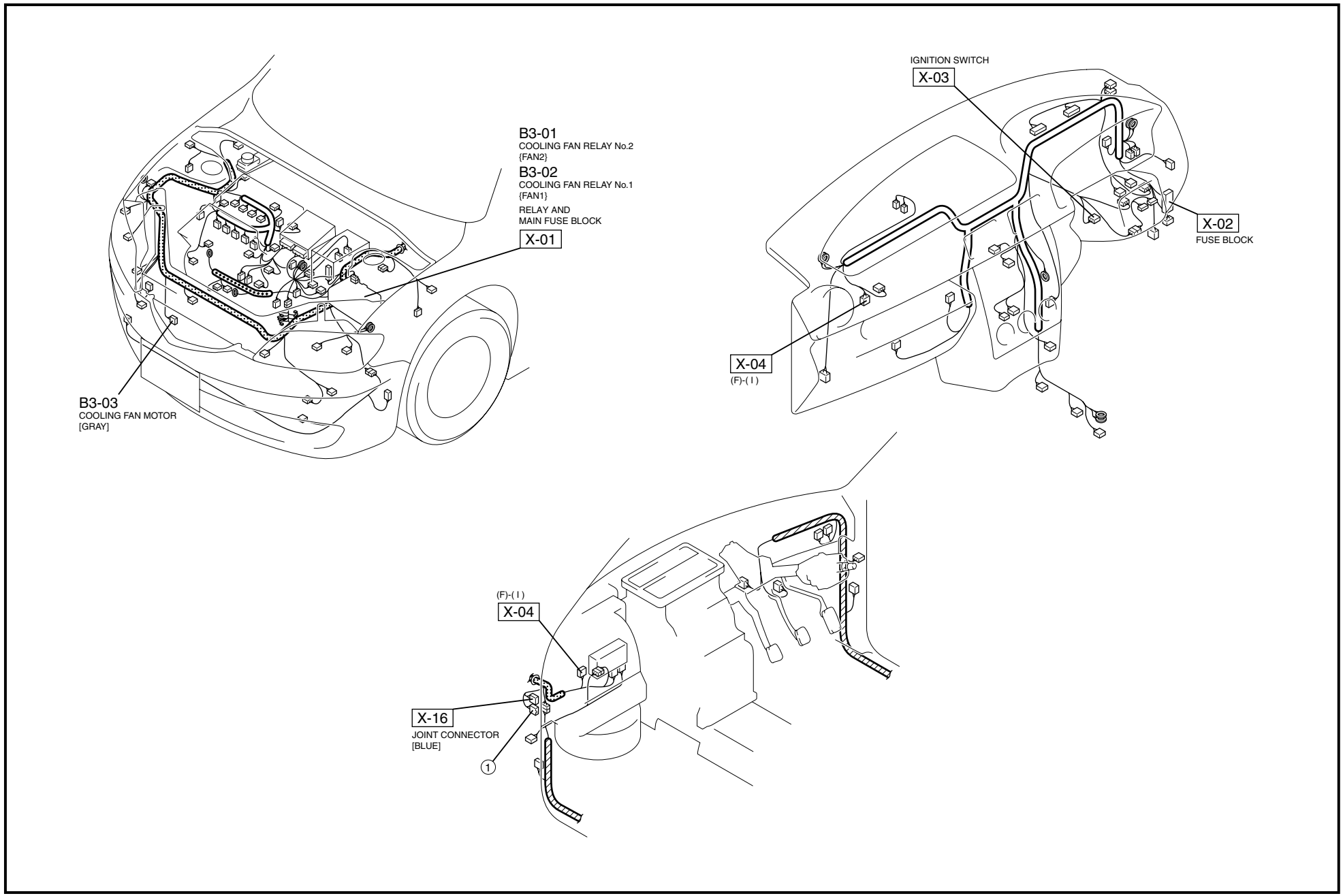

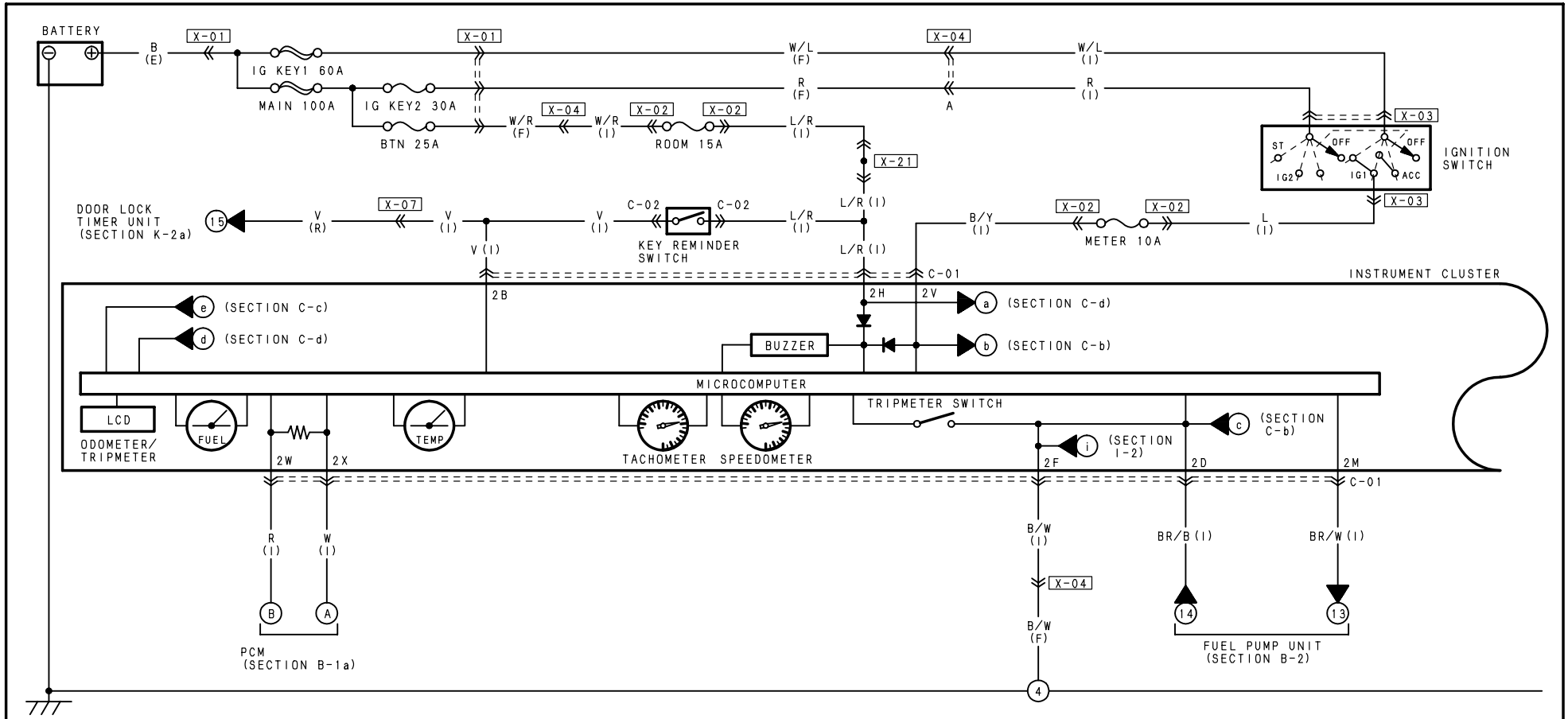

C-01 INSTRUMENT CLUSTER (I)

	2Q	2O	2M	2K	2I	2G					
2W	2U	2S							2E	2C	2A
R	✳	✳	✳	✳	BR/W	LG/B	W/R	L/Y	B	✳	✳
W	B/Y	✳	G/B	G	G/W	✳	✳	L/R	B/W	BR/B	V
2X	2V	2T	2R	2P	2N	2L	2J	2H	2F	2D	2B

C-02 KEY REMINDER SWITCH (I)

V	L/R

HARNESS SYMBOL: (F) (E) (R)

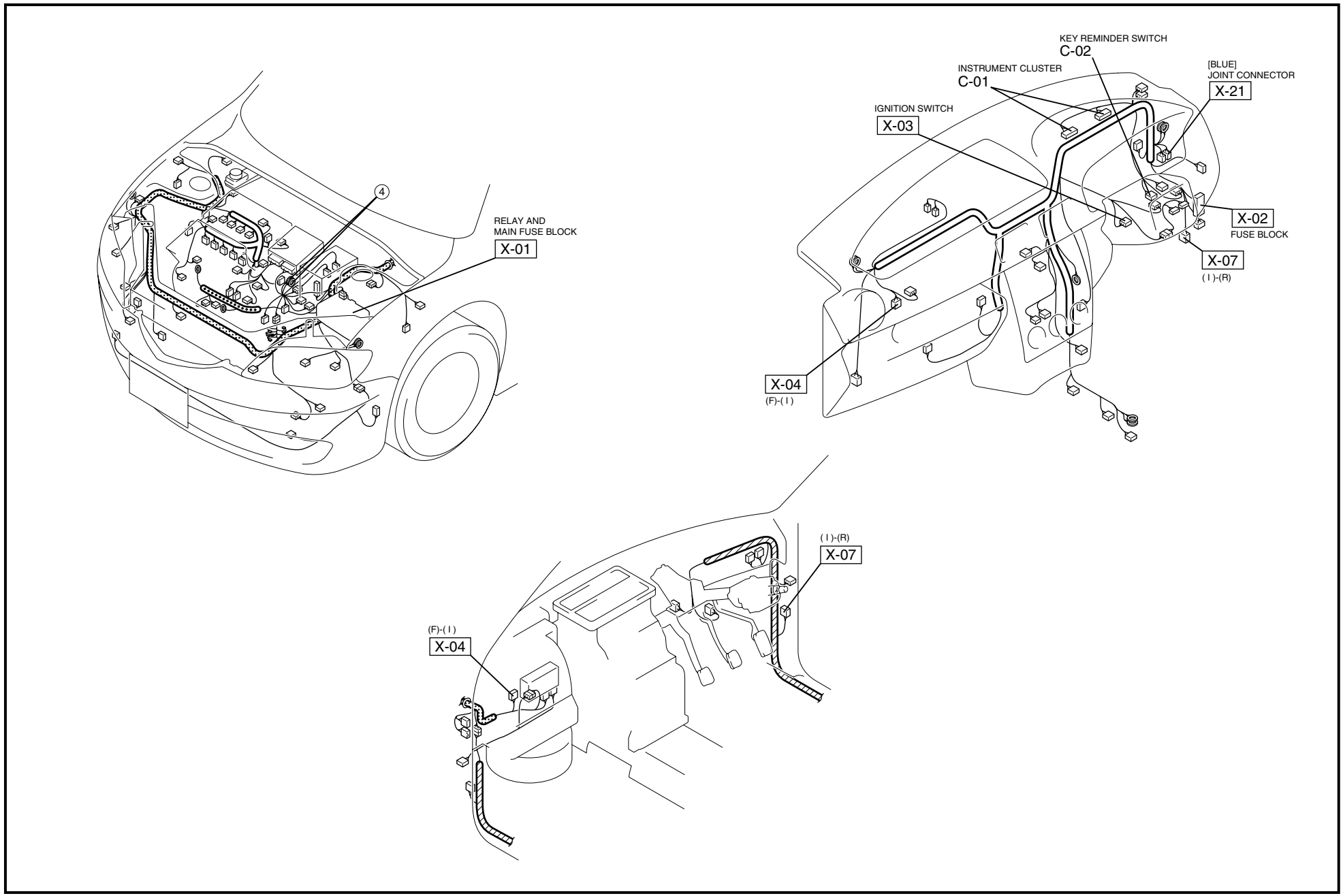

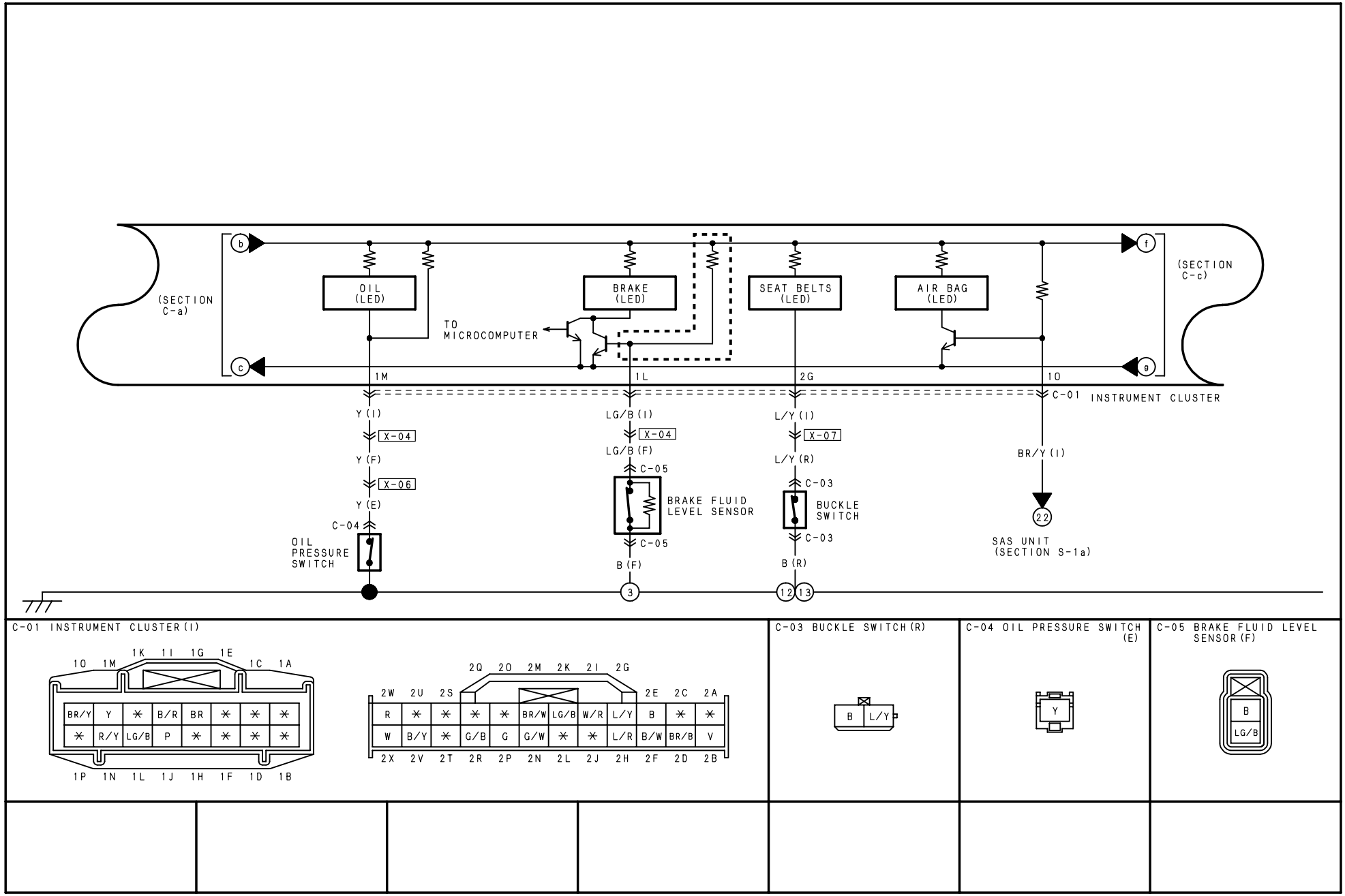
(SECTION C-a)
(SECTION C-c)
OIL (LED)
BRAKE (LED)
SEAT BELTS (LED)
AIR BAG (LED)
TO MICROCOMPUTER
1M
1L
2G
1O
C-01 INSTRUMENT CLUSTER
Y (I)
X-04
Y (F)
X-06
Y (E)
C-04
OIL PRESSURE SWITCH
LG/B (I)
X-04
LG/B (F)
C-05
BRAKE FLUID LEVEL SENSOR
C-05
B (F)
L/Y (I)
X-07
L/Y (R)
C-03
BUCKLE SWITCH
C-03
B (R)
BR/Y (I)
22
SAS UNIT (SECTION S-1a)
C-01 INSTRUMENT CLUSTER (I)
1O 1M 1K 1I 1G 1E 1C 1A
BR/Y Y ✳ B/R BR ✳ ✳ ✳
✳ R/Y LG/B P ✳ ✳ ✳ ✳
1P 1N 1L 1J 1H 1F 1D 1B
2Q 2O 2M 2K 2I 2G
2W 2U 2S 2E 2C 2A
R ✳ ✳ ✳ ✳ BR/W LG/B W/R L/Y B ✳ ✳
W B/Y ✳ G/B G G/W ✳ ✳ L/R B/W BR/B V
2X 2V 2T 2R 2P 2N 2L 2J 2H 2F 2D 2B
C-03 BUCKLE SWITCH (R)
B L/Y
C-04 OIL PRESSURE SWITCH (E)
Y
C-05 BRAKE FLUID LEVEL SENSOR (F)
B
LG/B

HARNESS SYMBOL: (F) (E) (R)

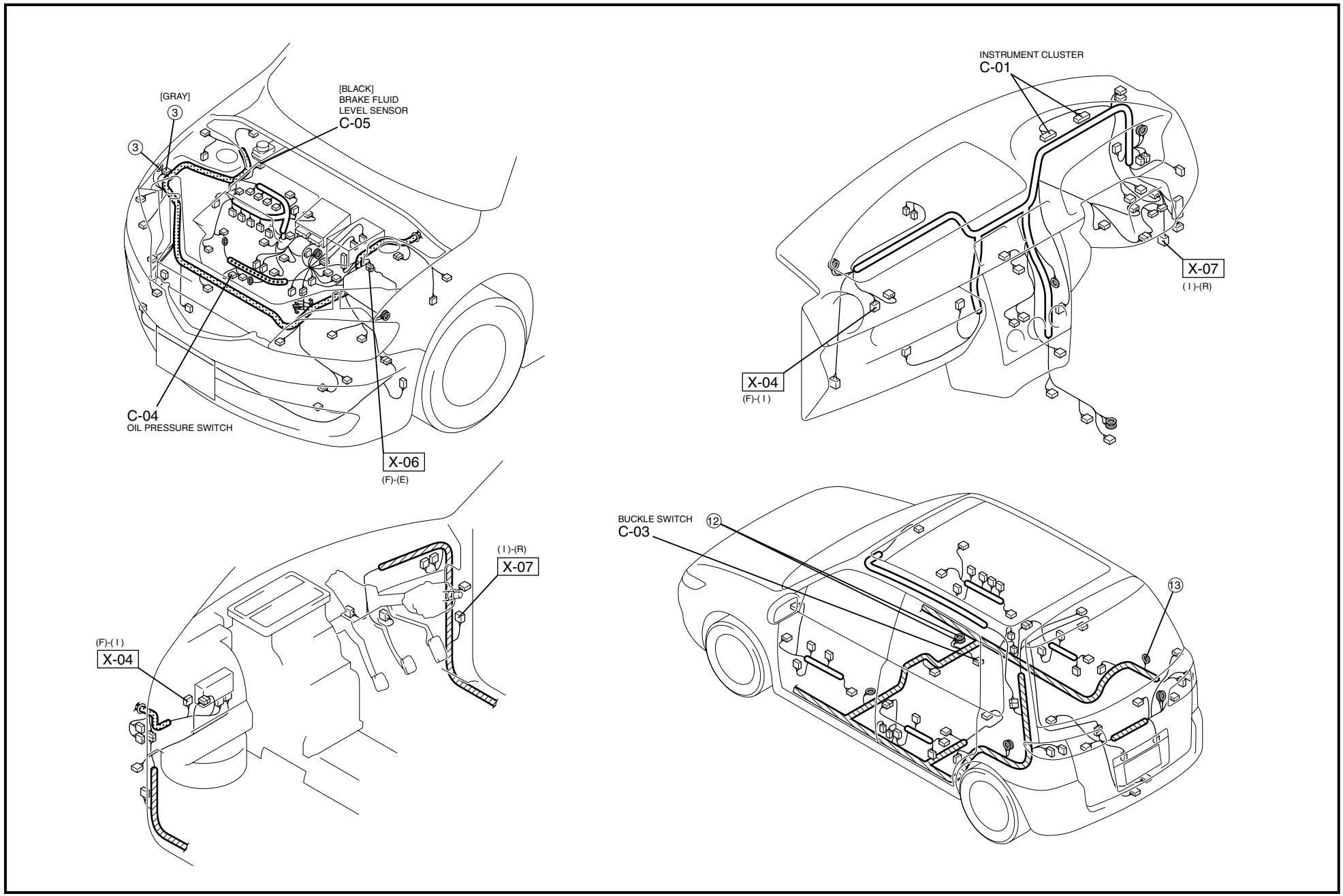

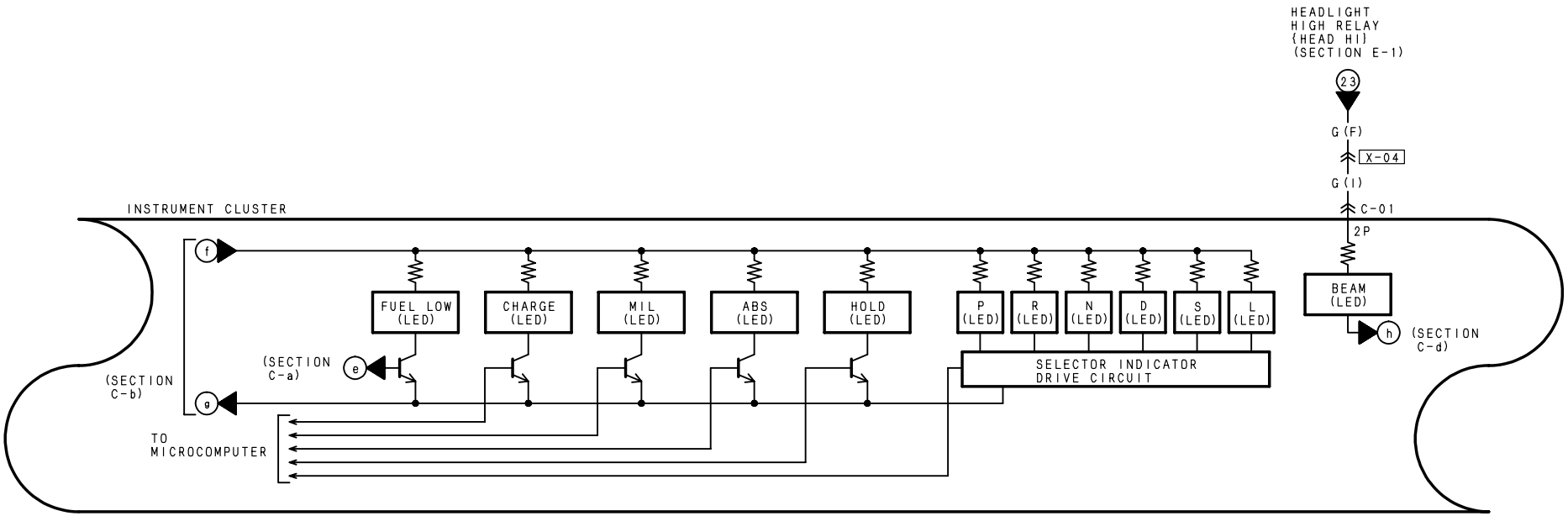

C-01 INSTRUMENT CLUSTER (I)

	2W	2U	2S	2Q	2O	2M	2K	2I	2G	2E	2C	2A
	R	✳	✳	✳	✳	BR/W	LG/B	W/R	L/Y	B	✳	✳
	W	B/Y	✳	G/B	G	G/W	✳	✳	L/R	B/W	BR/B	V
	2X	2V	2T	2R	2P	2N	2L	2J	2H	2F	2D	2B

HARNESS SYMBOL: (F) (E) (R)

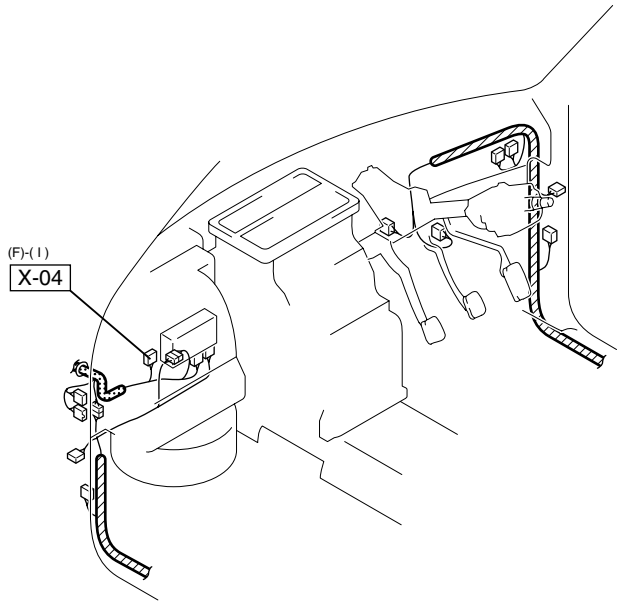

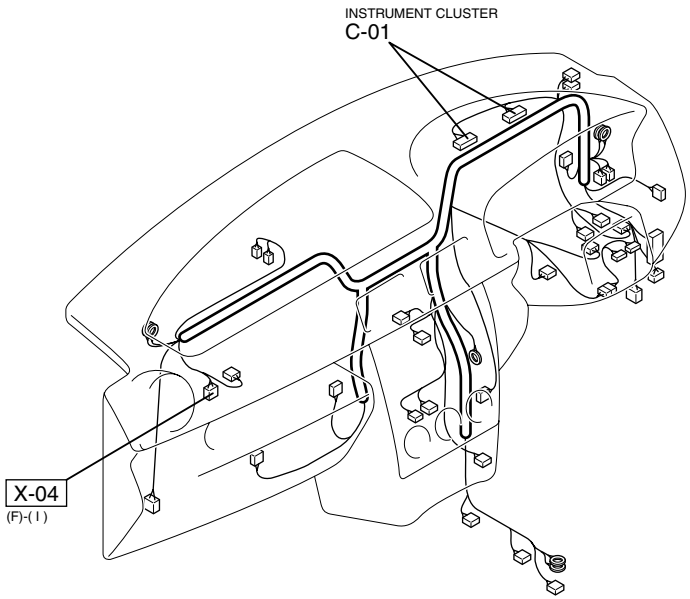

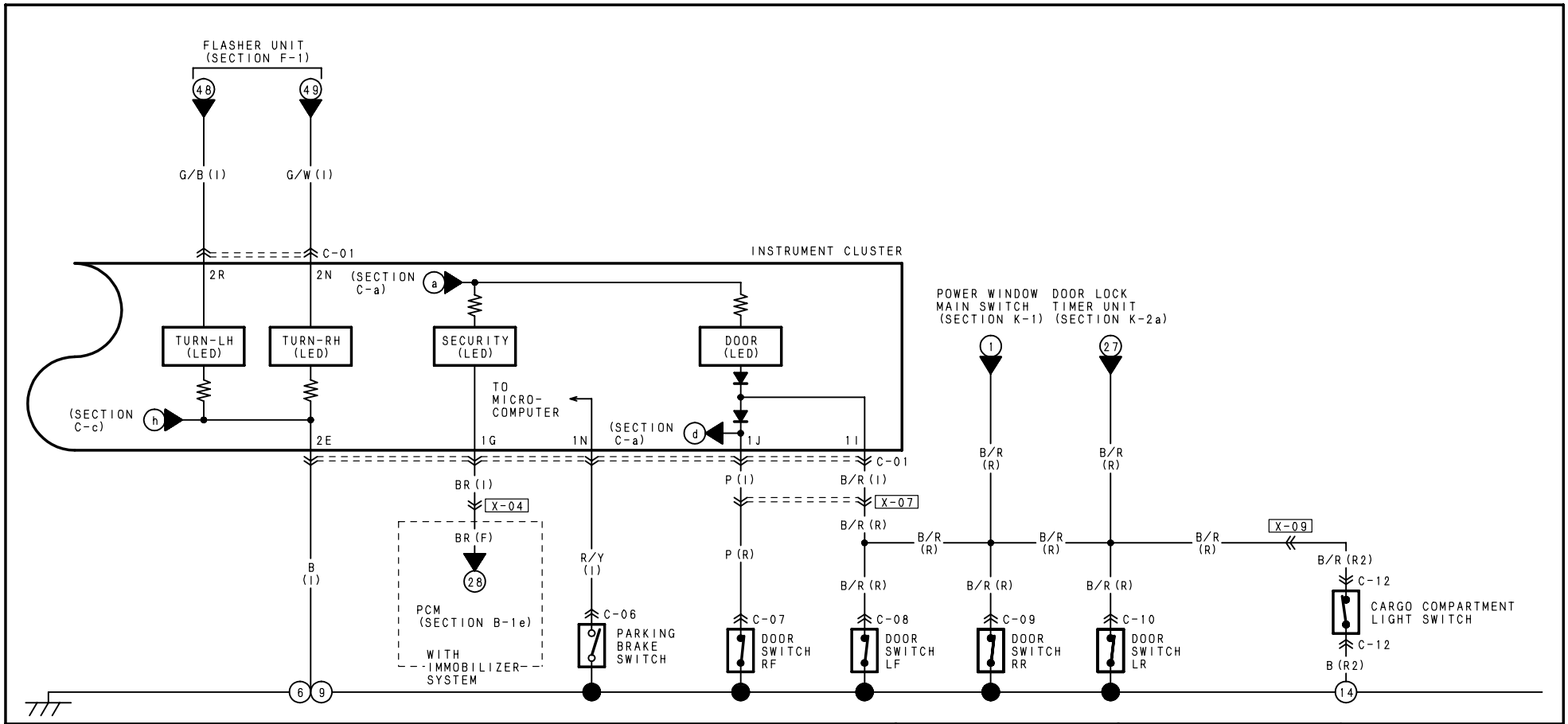

C-01 INSTRUMENT CLUSTER (I)

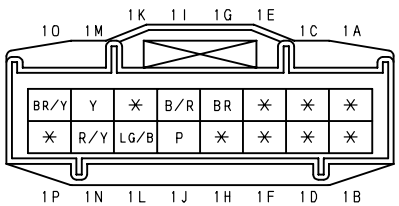

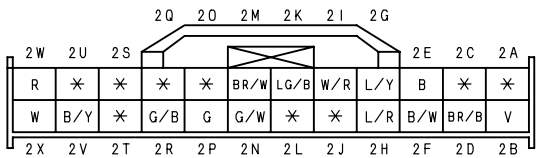

C-06 PARKING BRAKE SWITCH (I)

C-07 DOOR SWITCH RF (R)

C-08 DOOR SWITCH LF (R)

C-09 DOOR SWITCH RR (R)

C-10 DOOR SWITCH LR (R)

C-12 CARGO COMPARTMENT LIGHT SWITCH (R2)

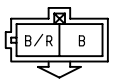

HARNESS SYMBOL: (F) (E) (R)

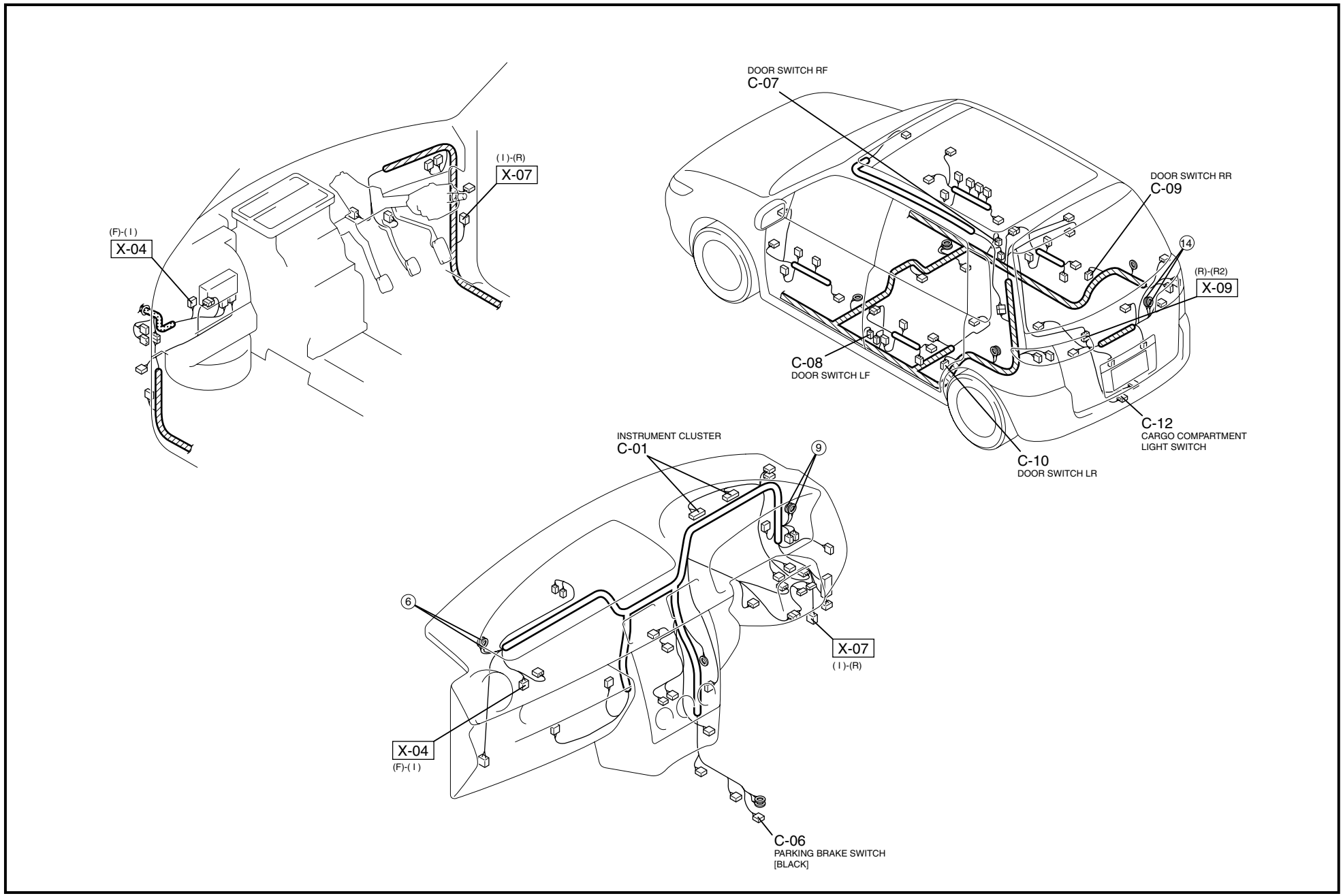

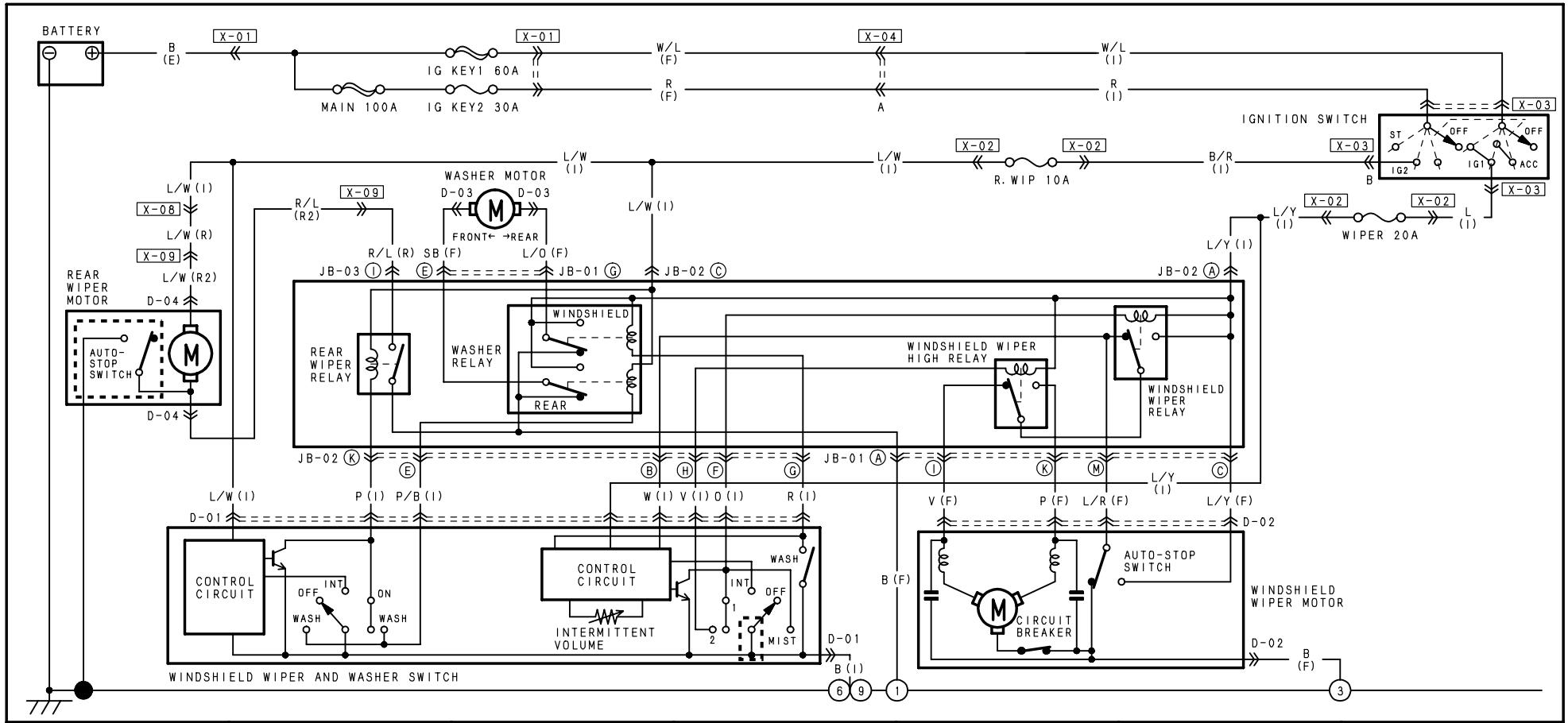

D-01 WINDSHIELD WIPER AND WASHER SWITCH (I)	D-02 WINDSHIELD WIPER MOTOR (F)	D-03 WASHER MOTOR (F)	D-04 REAR WIPER MOTOR (R2)			
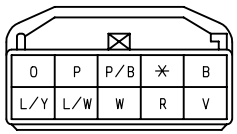	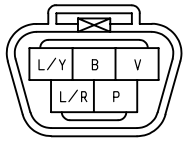	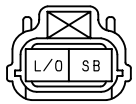	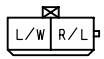			

HARNESS SYMBOL: (F) (E) (R)

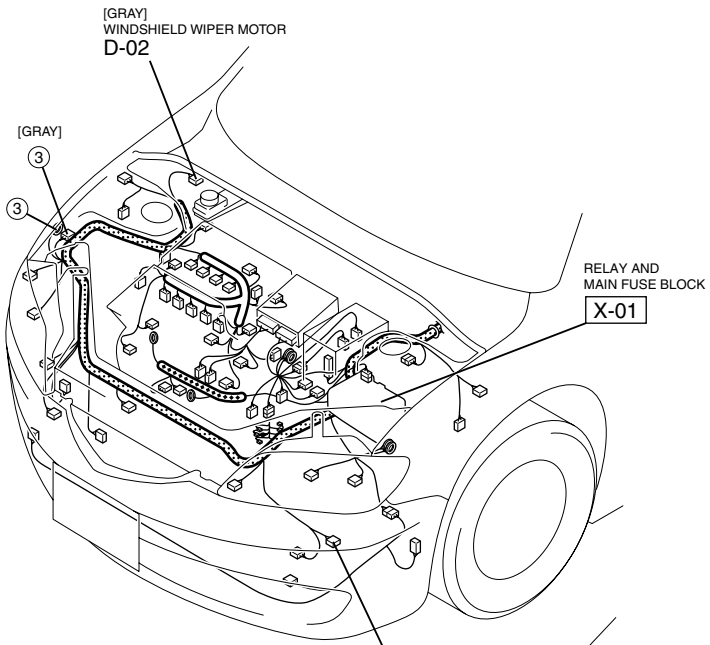

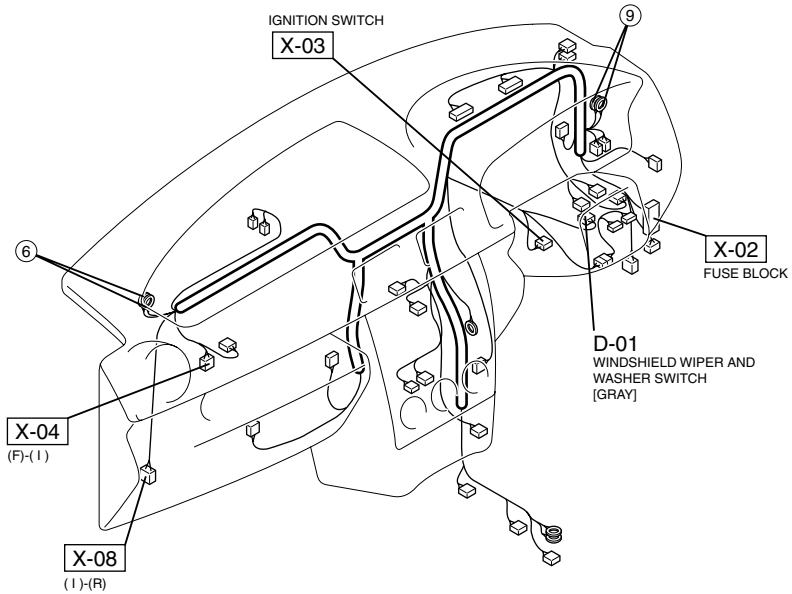

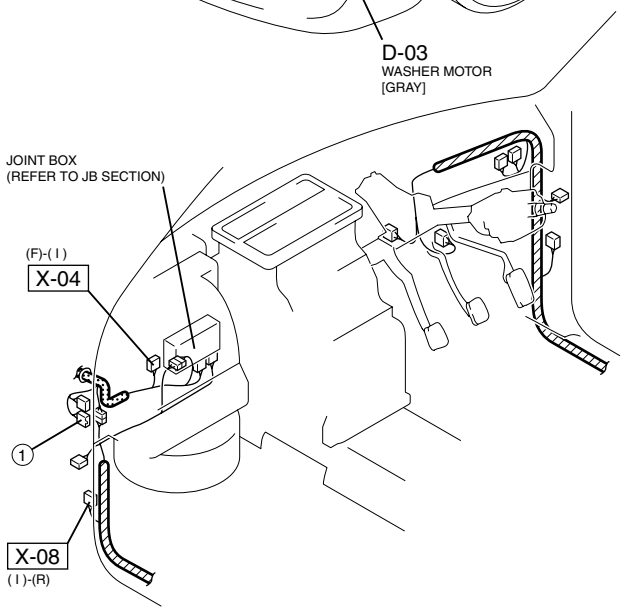

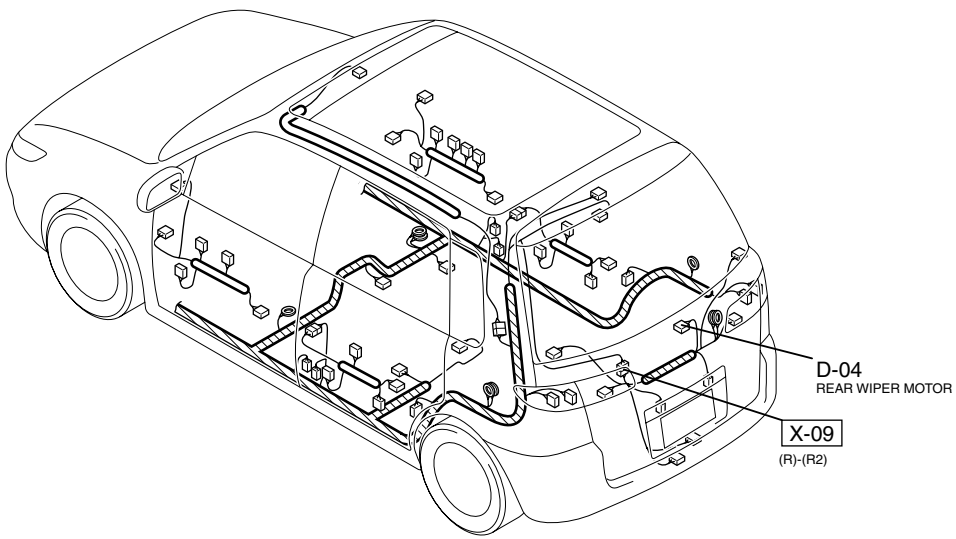

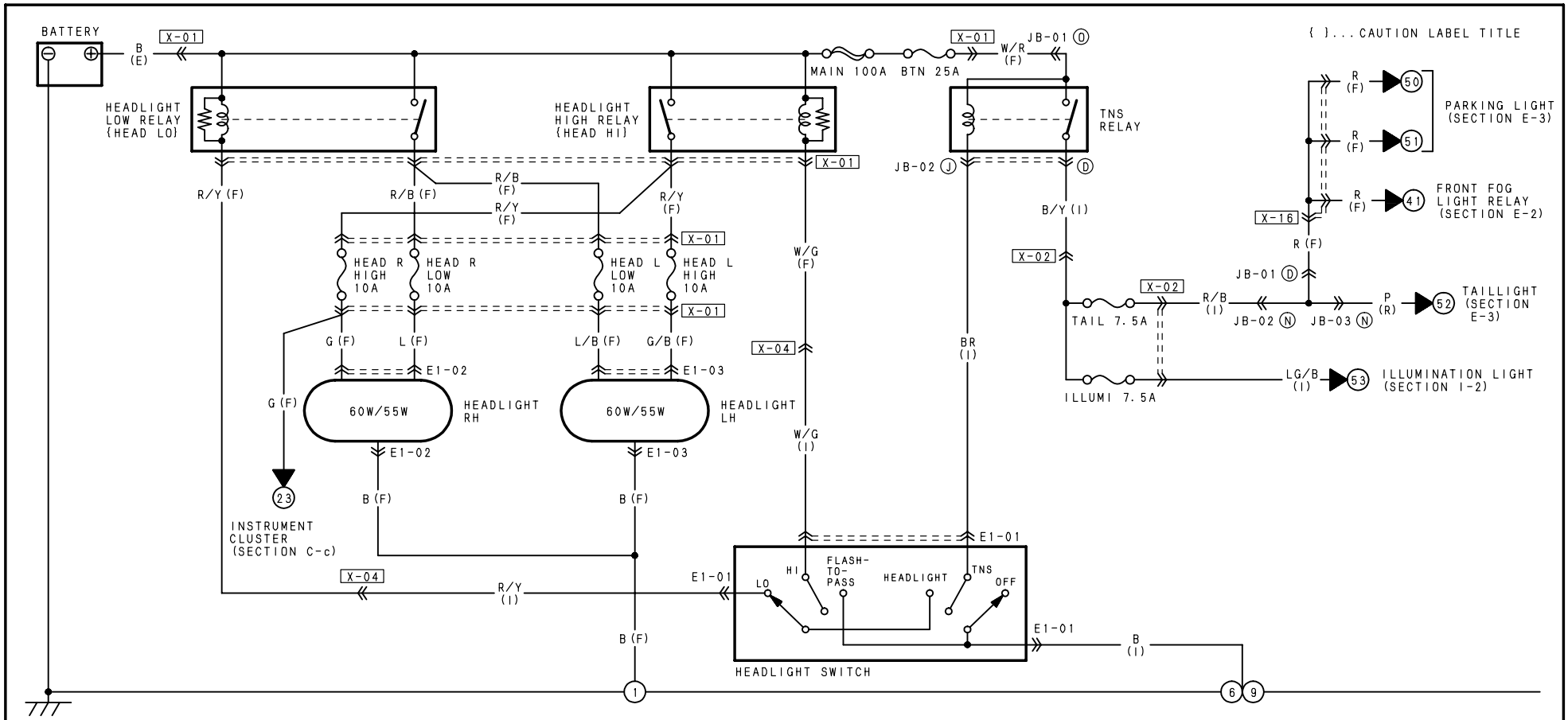

E1-01 HEADLIGHT SWITCH (I)

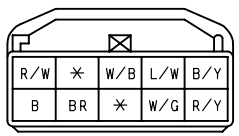

E1-02 HEADLIGHT RH (F)

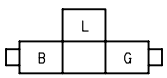

E1-03 HEADLIGHT LH (F)

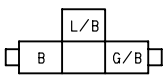

HARNESS SYMBOL: (F) (E) (R)

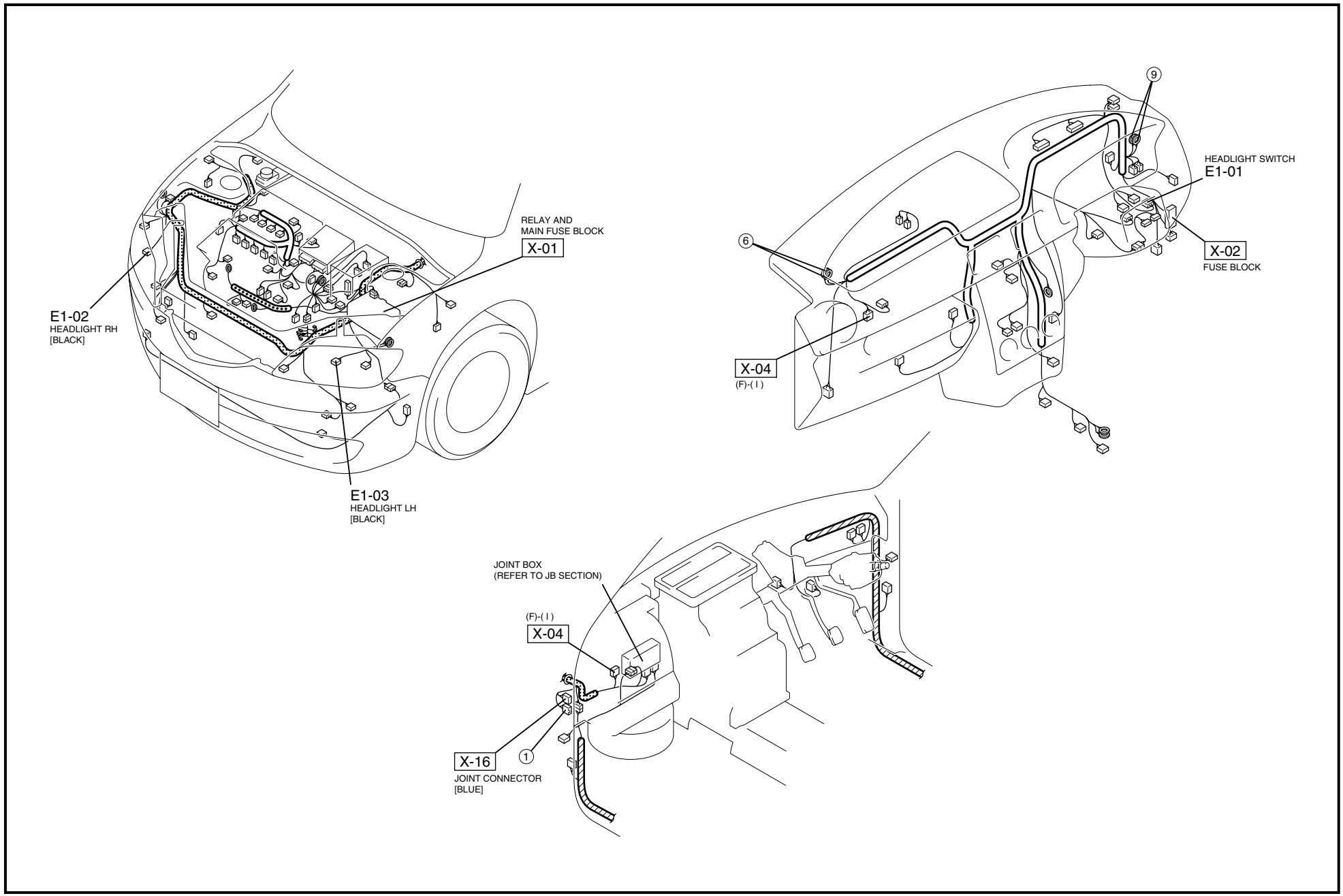

FRONT FOG LIGHT

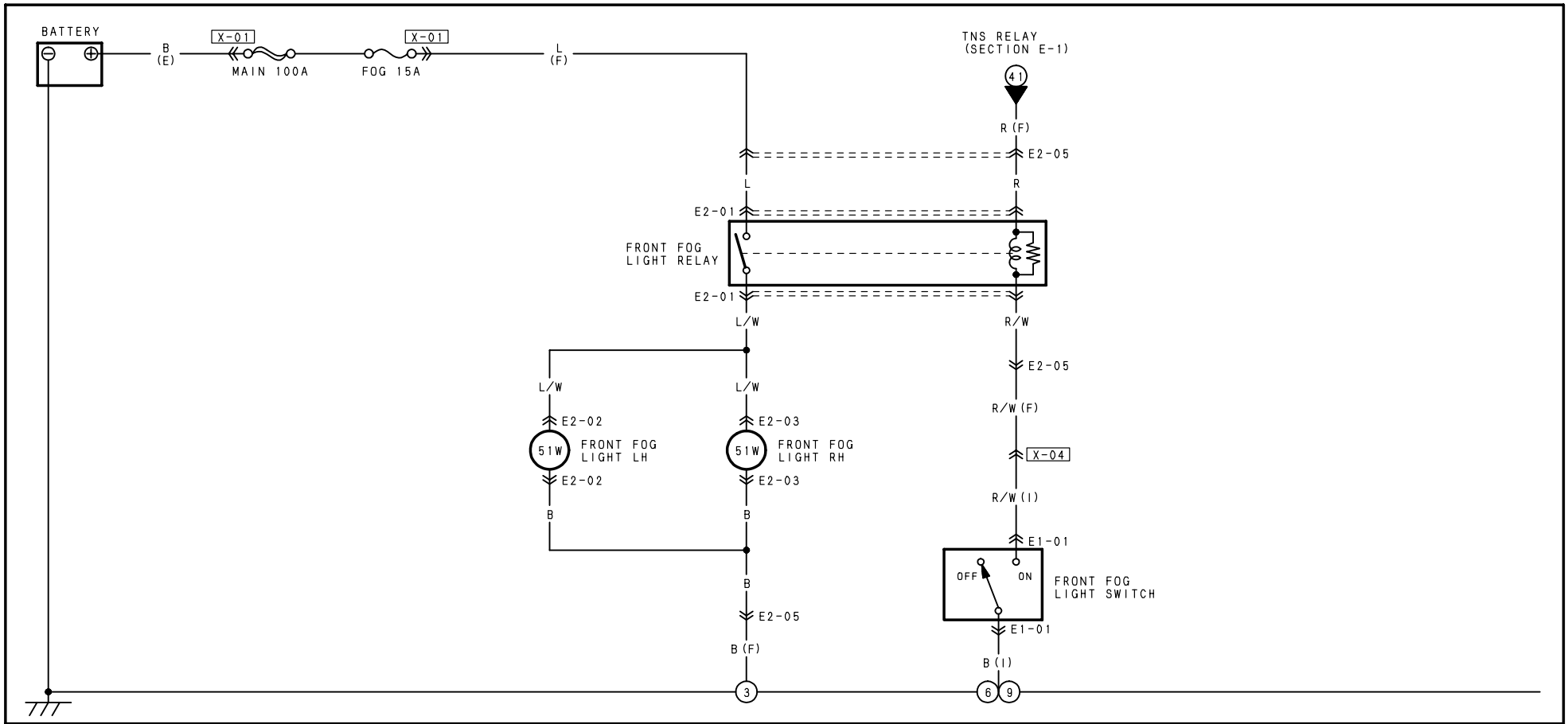

E2-01 FRONT FOG LIGHT RELAY (SHORT CORD)

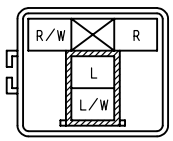

E2-02 FRONT FOG LIGHT LH (SHORT CORD)

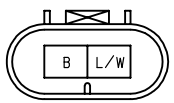

E2-03 FRONT FOG LIGHT RH (SHORT CORD)

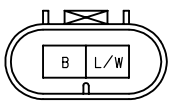

E2-05 FRONT (F) -SHORT CORD

(F)

(SHORT CORD)

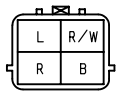

E1-01 FRONT FOG LIGHT SWITCH (I)

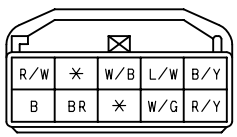

HARNESS SYMBOL: (F) (E) (R)

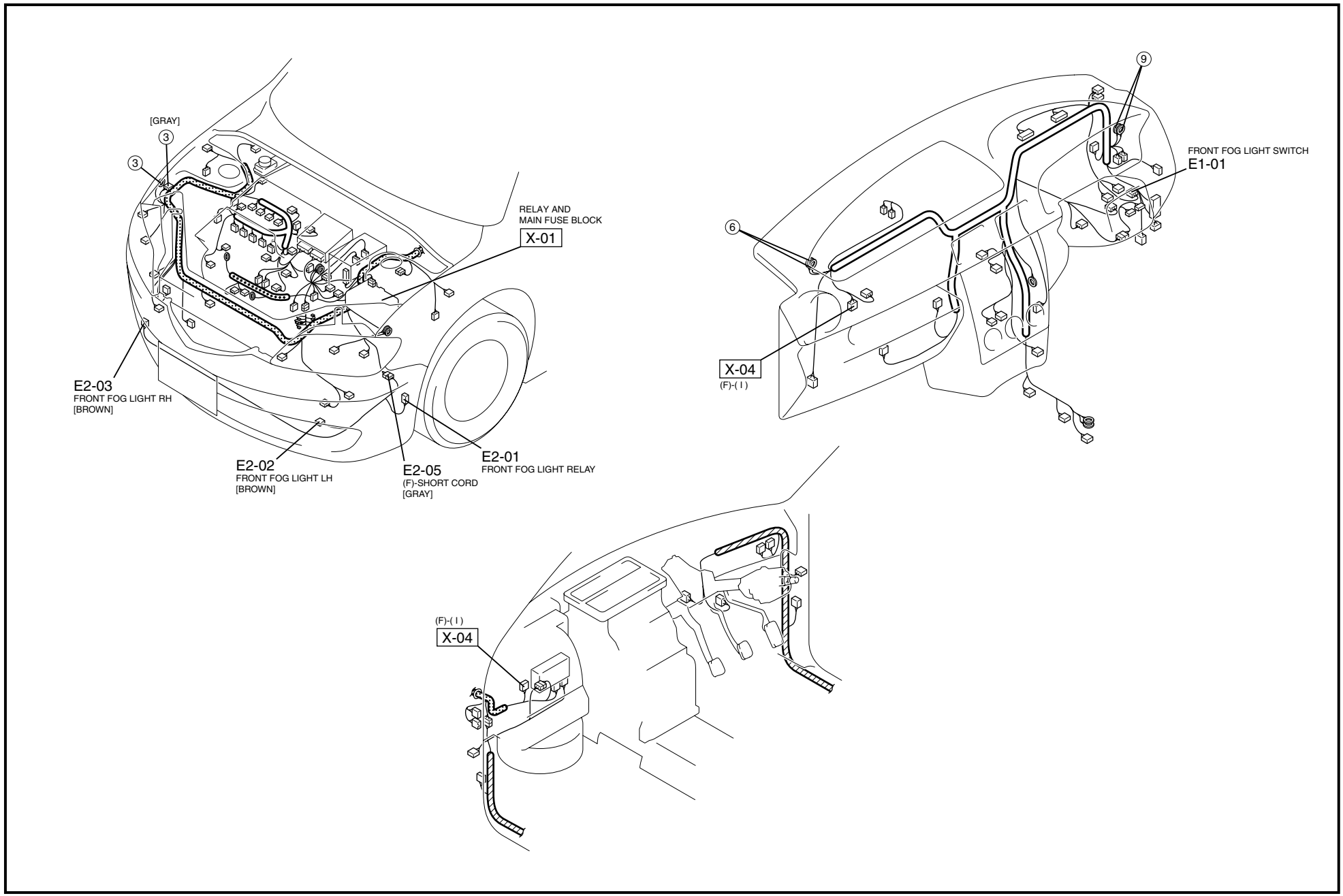

LICENSE PLATE LIGHT / PARKING LIGHT / TAILLIGHT

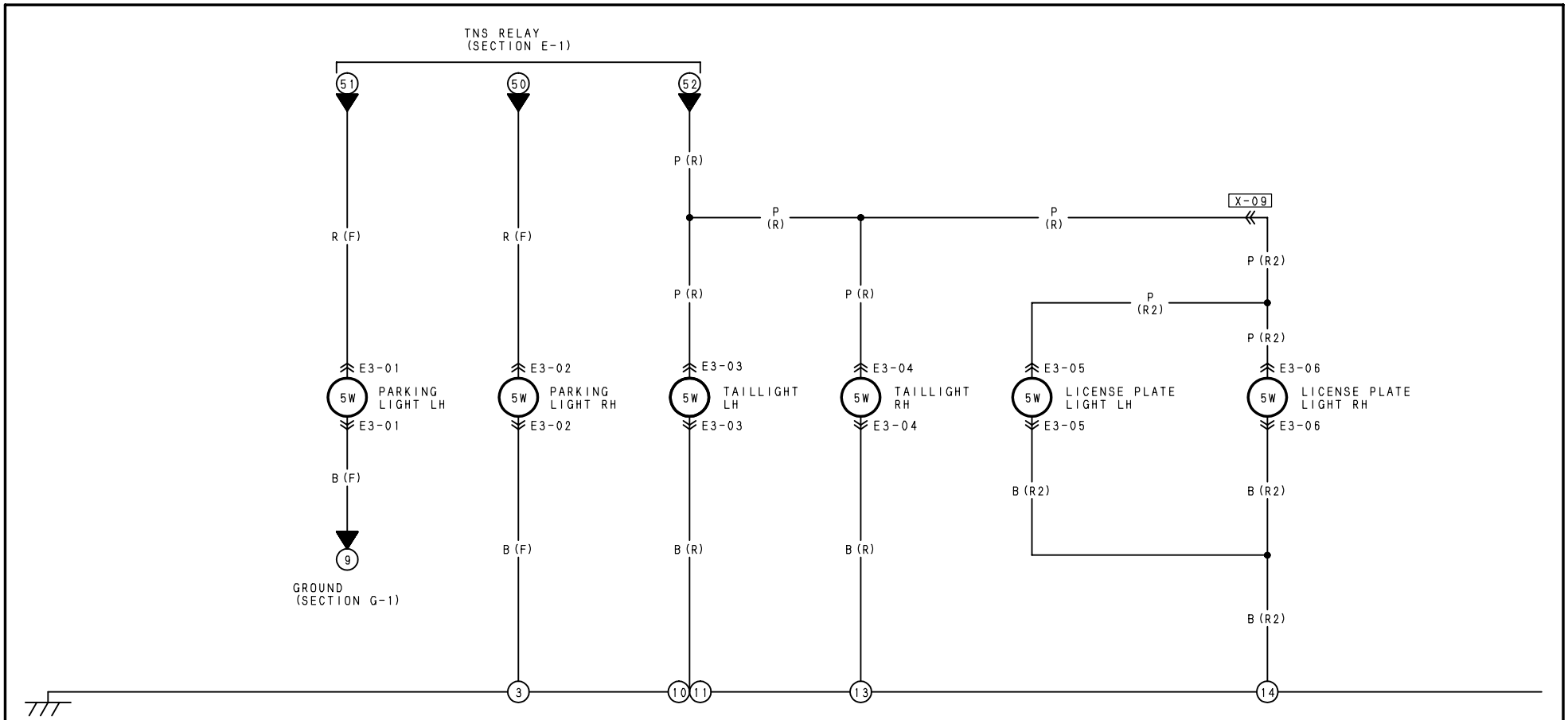

E3-01 PARKING LIGHT LH (F)	E3-02 PARKING LIGHT RH (F)	E3-03 TAILLIGHT LH (R)	E3-04 TAILLIGHT RH (R)	E3-05 LICENSE PLATE LIGHT LH (R2)	E3-06 LICENSE PLATE LIGHT RH (R2)	
B R	B R	✳ B R/W P	✳ B R/W P	B P	B P	

HARNESS SYMBOL: (F) (E) (R)

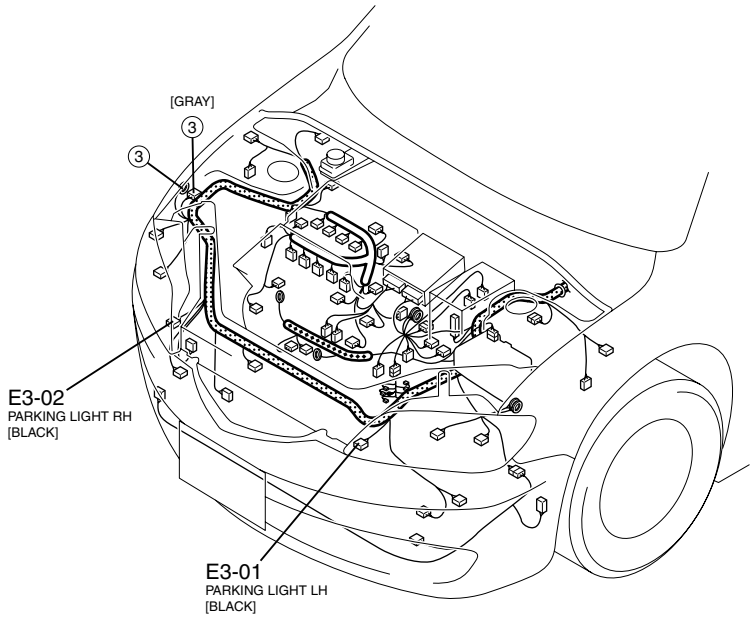

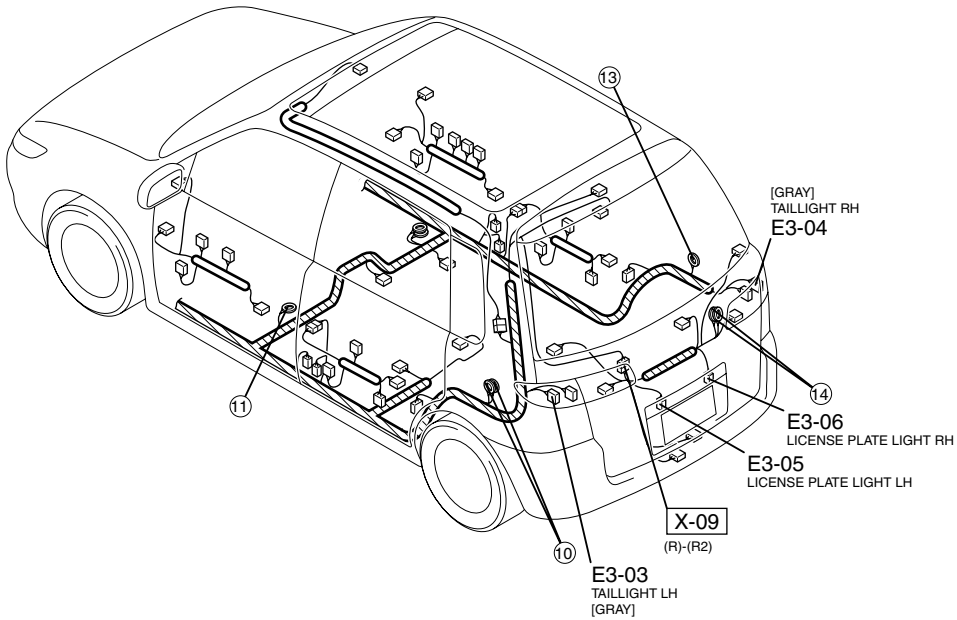

TURN AND HAZARD WARNING LIGHT

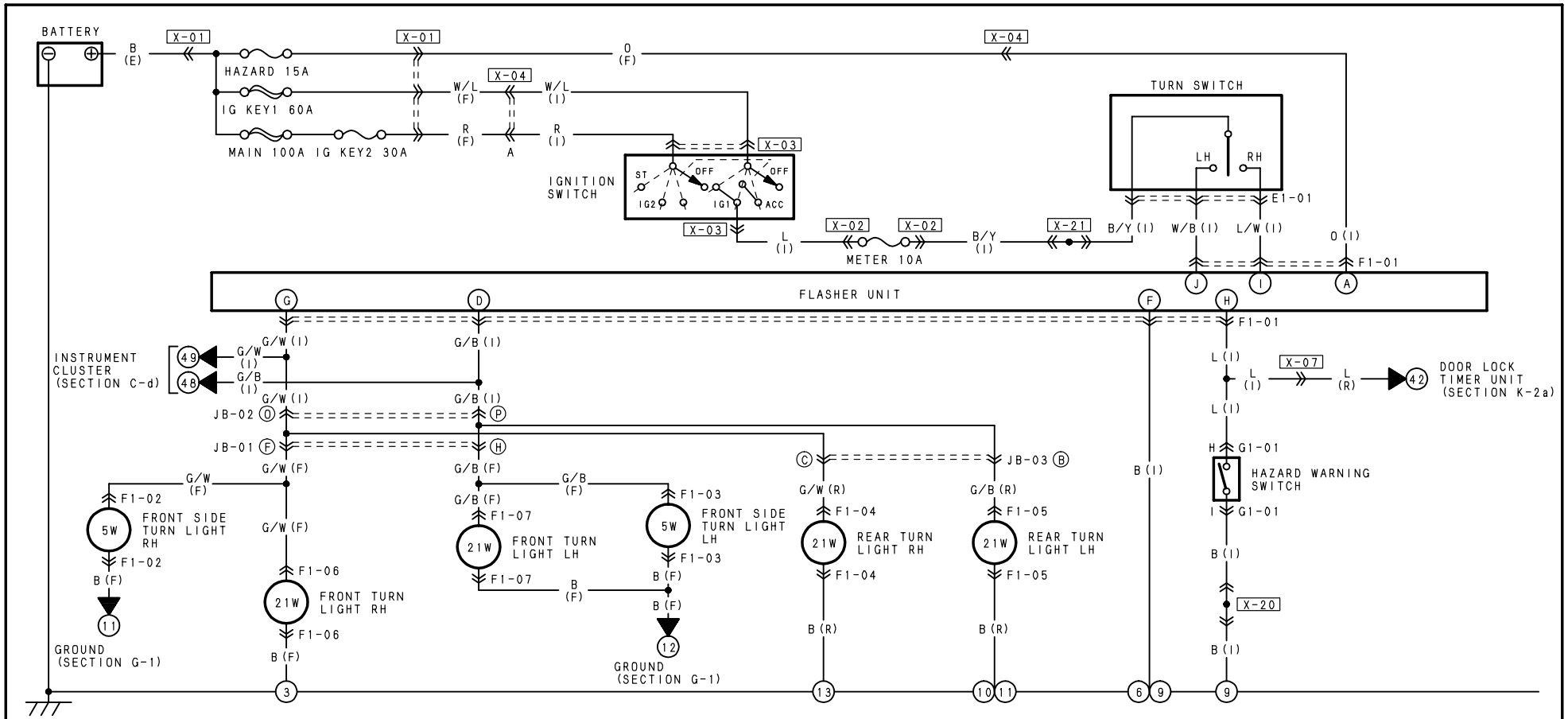

F1-01 FLASHER UNIT (I)	F1-02 FRONT SIDE TURN LIGHT RH (F)	F1-03 FRONT SIDE TURN LIGHT LH (F)	F1-04 REAR TURN LIGHT RH (R)	F1-05 REAR TURN LIGHT LH (R)	F1-06 FRONT TURN LIGHT RH (F)	F1-07 FRONT TURN LIGHT LH (F)
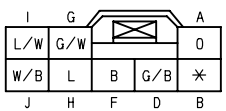			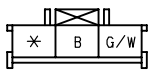	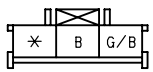		

E1-01 TURN SWITCH (I)	G1-01 HAZARD WARNING SWITCH (I)				
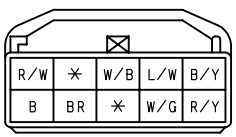	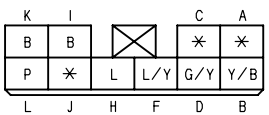				

HARNESS SYMBOL: (F) (E) (R)

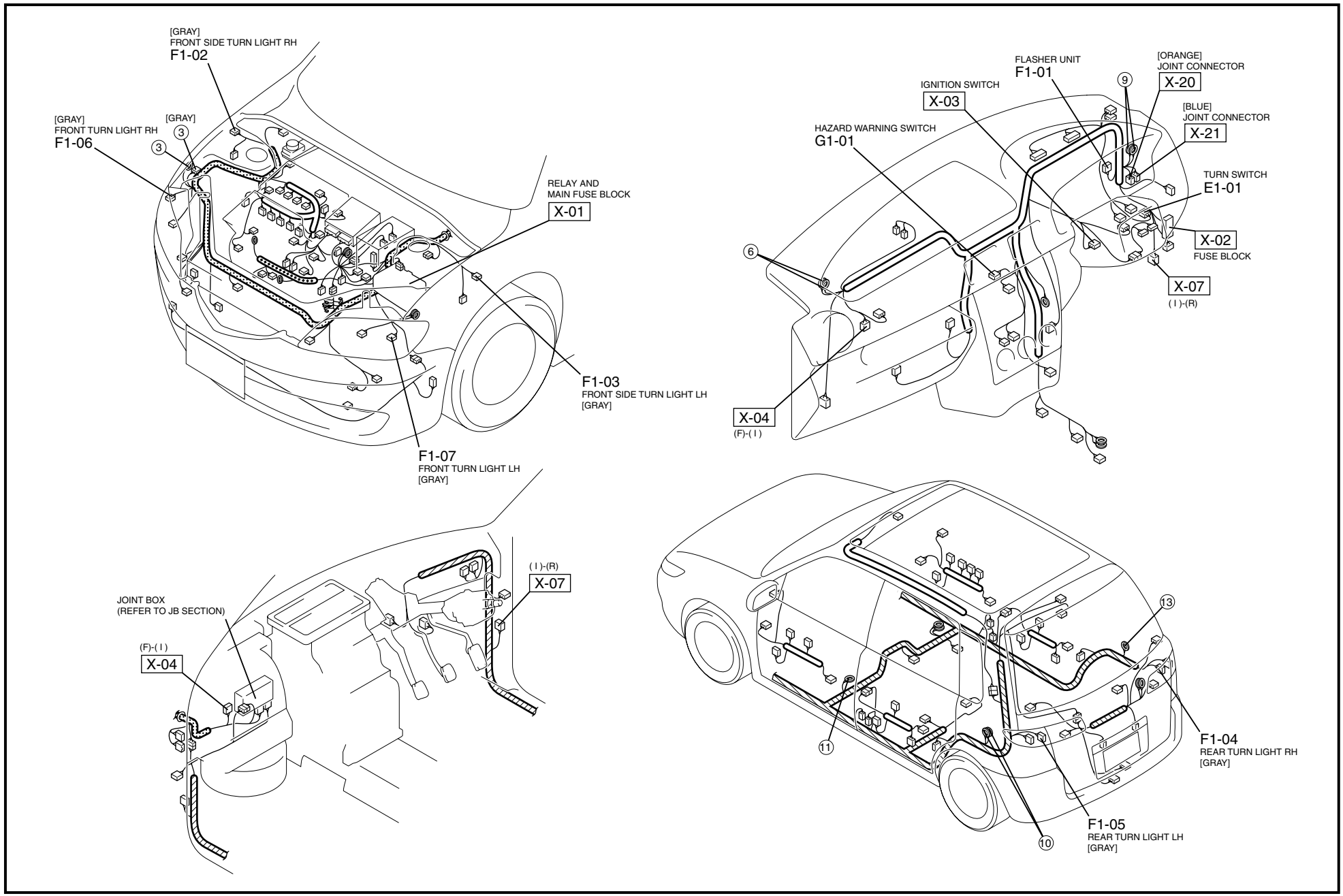

BACK-UP LIGHT

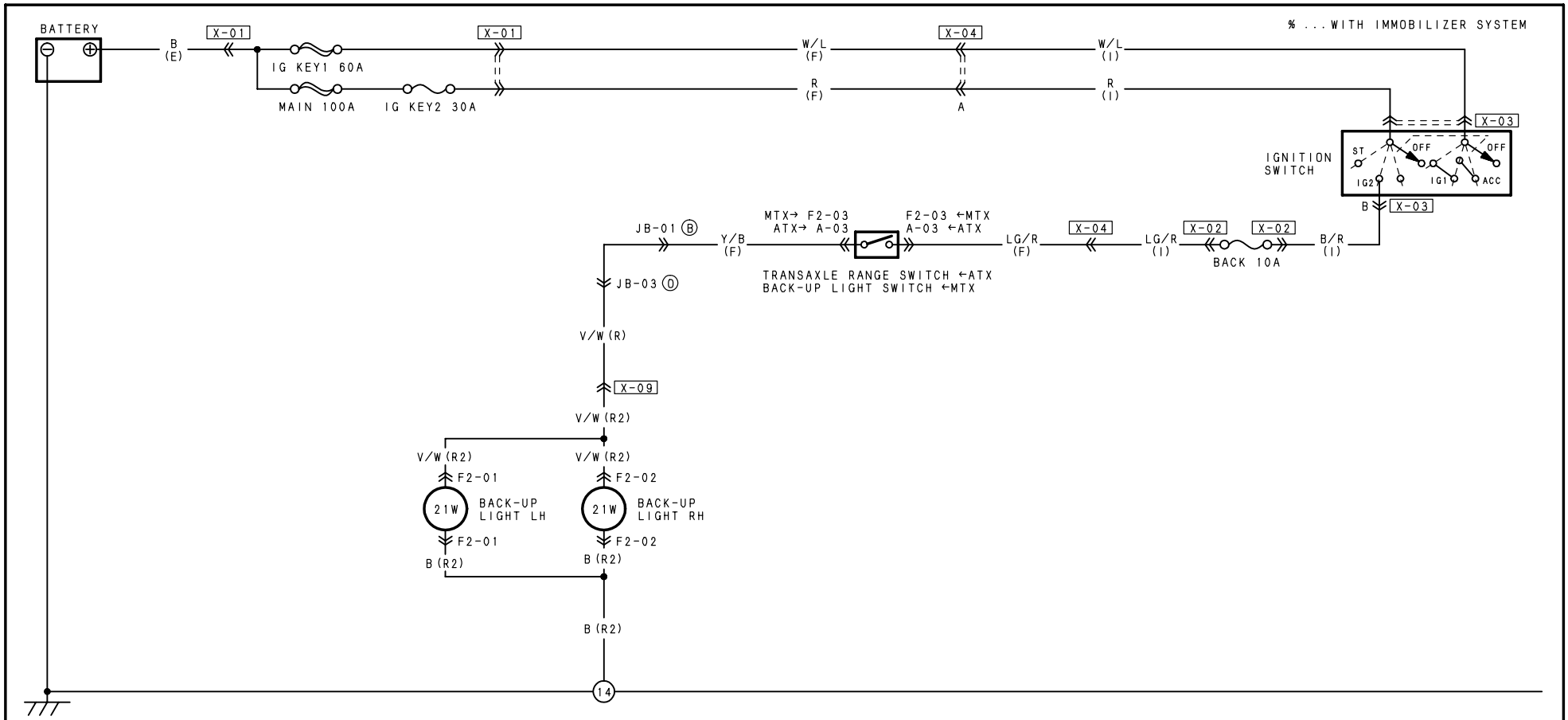

F2-01 BACK-UP LIGHT LH (R2)

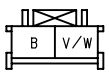

F2-02 BACK-UP LIGHT RH (R2)

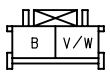

F2-03 BACK-UP LIGHT SWITCH (F)

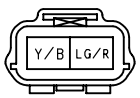

A-03 TRANSAXLE RANGE SWITCH (F)

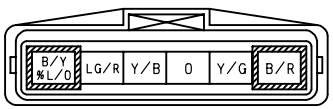

HARNESS SYMBOL: (F) (E) (R)

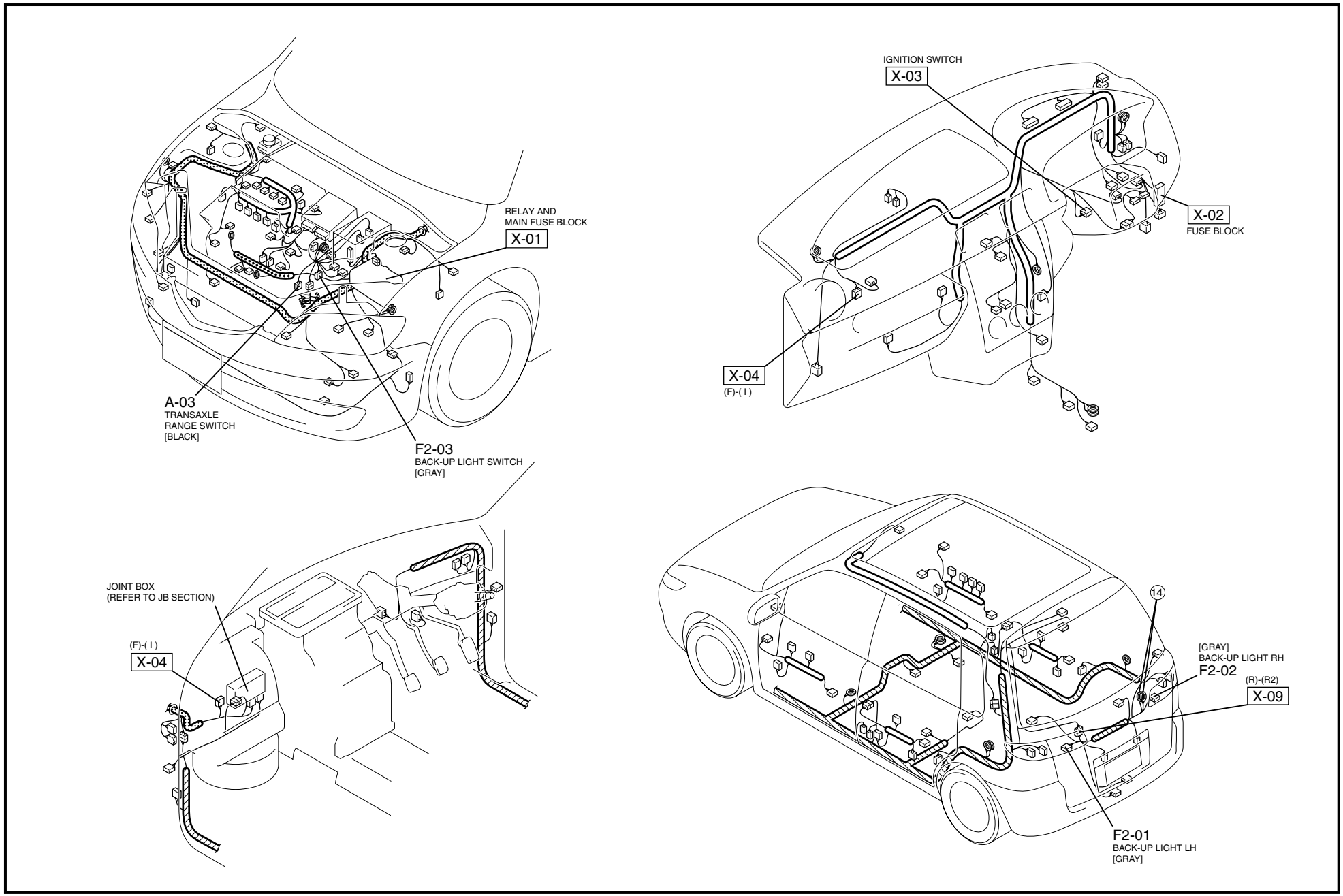

BRAKE LIGHT / HIGH-MOUNT BRAKE LIGHT / HORN

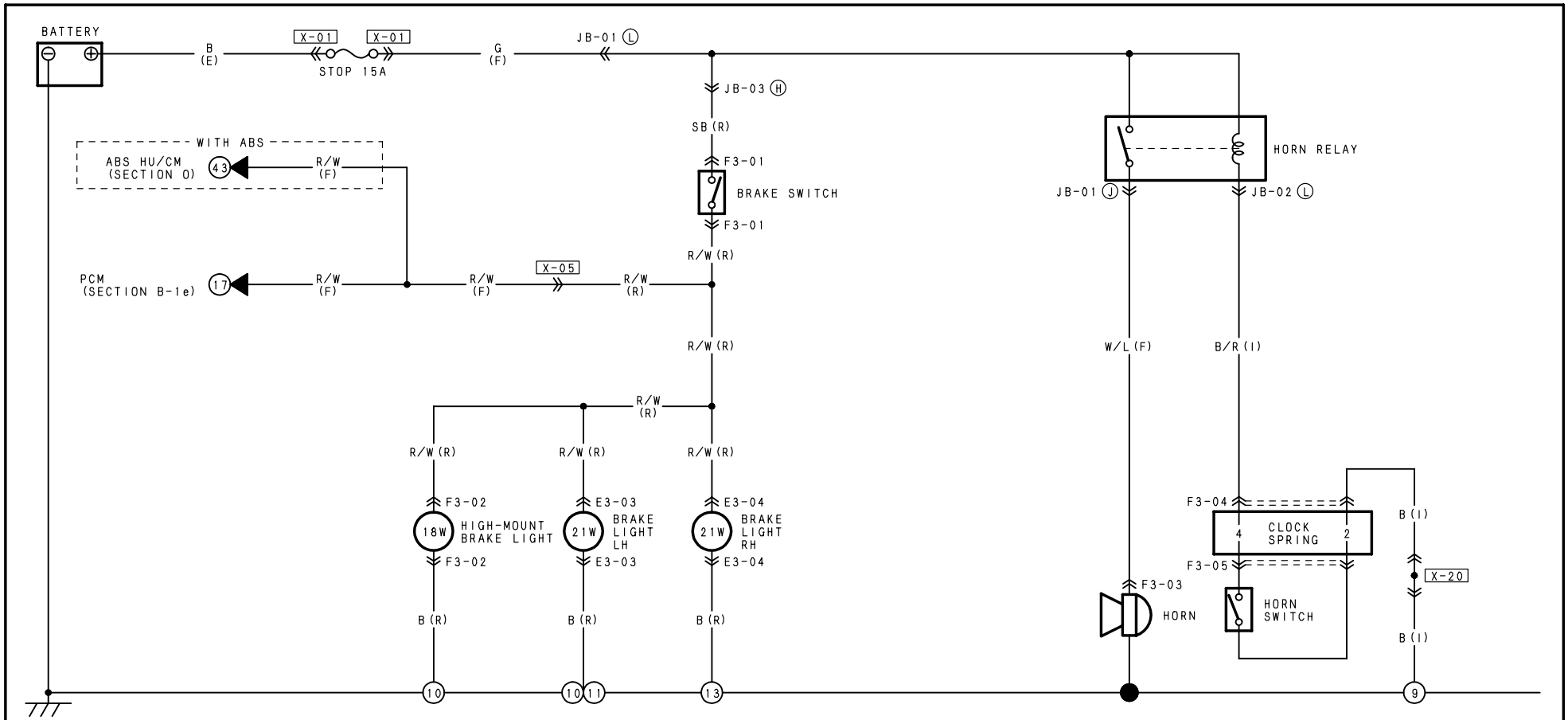

F3-01 BRAKE SWITCH (R)

F3-02 HIGH-MOUNT BRAKE LIGHT (R)

F3-03 HORN (F)

F3-04 INSTRUMENT PANEL (I) - CLOCK SPRING

(I)

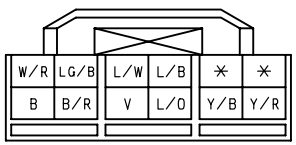

(CLOCK SPRING)

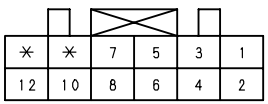

TERMINALS OF THIS CONNECTOR ARE INDICATED BY NUMBERS.

NOTE: THIS IS THE CONNECTOR AS SEEN FROM THE TERMINAL SIDE.

F3-05 HORN SWITCH (CLOCK SPRING)

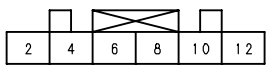

TERMINALS OF THIS CONNECTOR ARE INDICATED BY NUMBERS.
NOTE: THIS IS THE CONNECTOR AS SEEN FROM THE TERMINAL SIDE.

E3-03 BRAKE LIGHT LH (R)

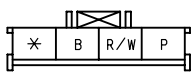

E3-04 BRAKE LIGHT RH (R)

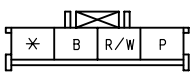

HARNESS SYMBOL: (F) (E) (R)

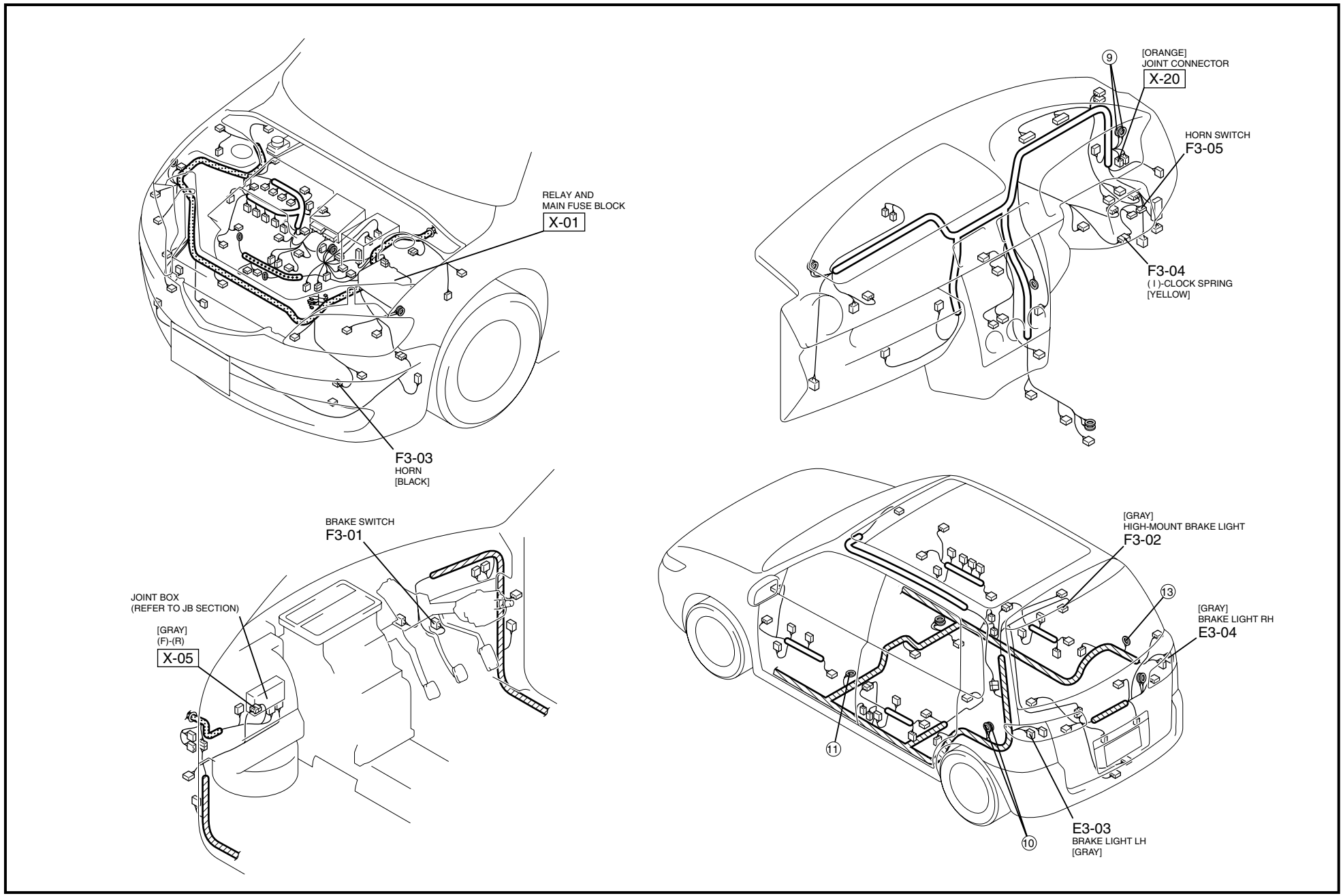

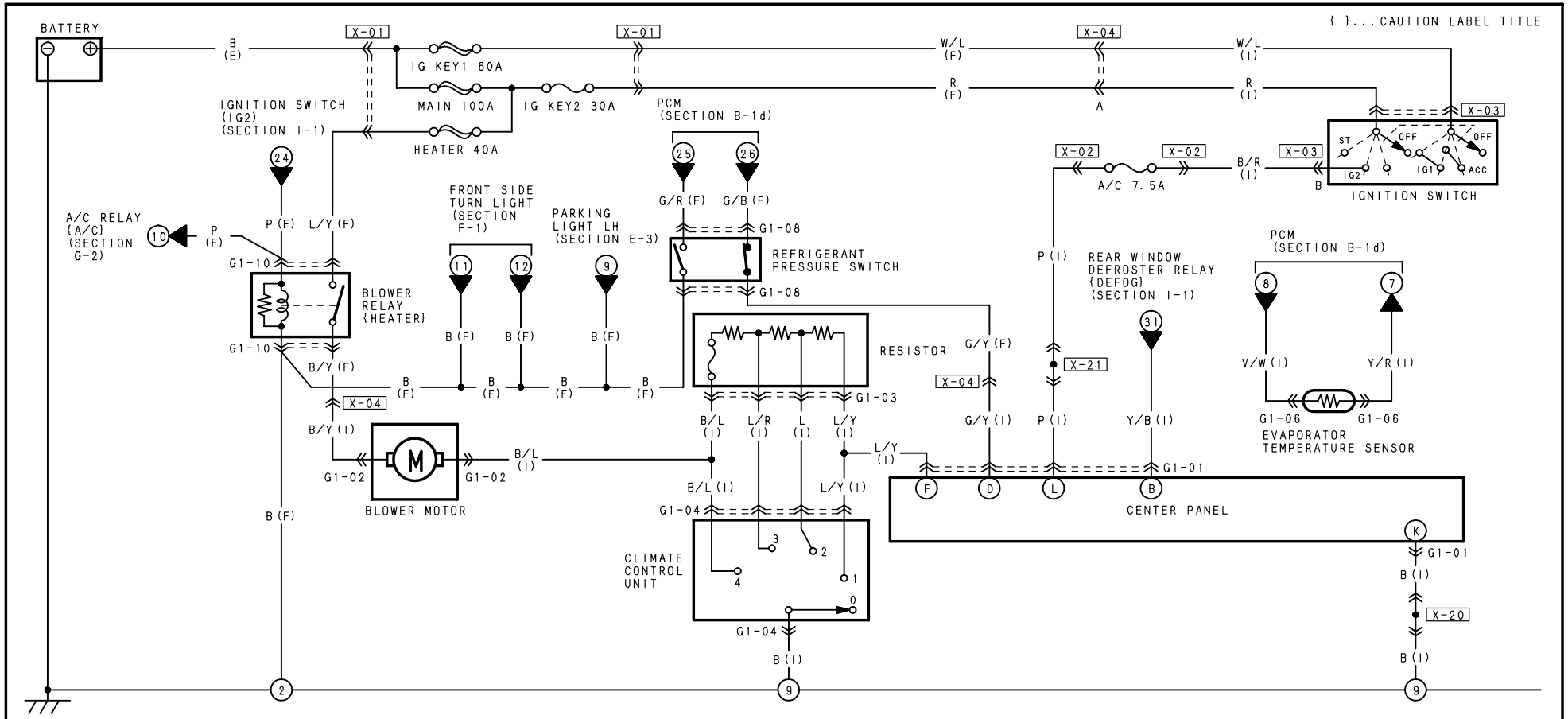
{ }...CAUTION LABEL TITLE
BATTERY
B (E)
X-01
IG KEY1 60A
MAIN 100A
IG KEY2 30A
HEATER 40A
IGNITION SWITCH (IG2) (SECTION I-1)
PCM (SECTION B-1d)
W/L (F)
R (F)
X-04
W/L (I)
R (I)
A
X-03
ST
OFF
IG2
IG1
ACC
IGNITION SWITCH
X-02
A/C 7.5A
B/R (I)
B
A/C RELAY (A/C) (SECTION G-2)
P (F)
P (F) L/Y (F)
G1-10
BLOWER RELAY (HEATER)
FRONT SIDE TURN LIGHT (SECTION F-1)
PARKING LIGHT LH (SECTION E-3)
G/R (F) G/B (F)
G1-08
REFRIGERANT PRESSURE SWITCH
B (F)
B/Y (F)
RESISTOR
G1-03
G/Y (F)
X-21
P (I)
REAR WINDOW DEFROSTER RELAY (DEFOG) (SECTION I-1)
PCM (SECTION B-1d)
V/W (I)
Y/R (I)
G1-06
EVAPORATOR TEMPERATURE SENSOR
B/Y (I)
G1-02
BLOWER MOTOR
B/L (I)
L/R (I)
L (I)
L/Y (I)
G/Y (I)
Y/B (I)
G1-01
CENTER PANEL
G1-04
CLIMATE CONTROL UNIT
X-20

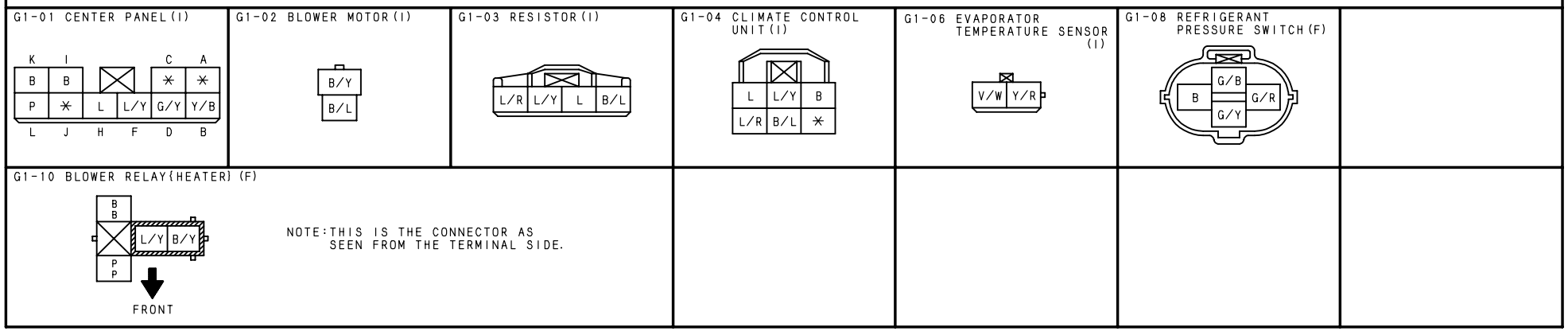
G1-01 CENTER PANEL (I)
G1-02 BLOWER MOTOR (I)
G1-03 RESISTOR (I)
G1-04 CLIMATE CONTROL UNIT (I)
G1-06 EVAPORATOR TEMPERATURE SENSOR (I)
G1-08 REFRIGERANT PRESSURE SWITCH (F)
G1-10 BLOWER RELAY (HEATER) (F)
NOTE: THIS IS THE CONNECTOR AS SEEN FROM THE TERMINAL SIDE.
FRONT

HARNESS SYMBOL: (F) (E) (R)

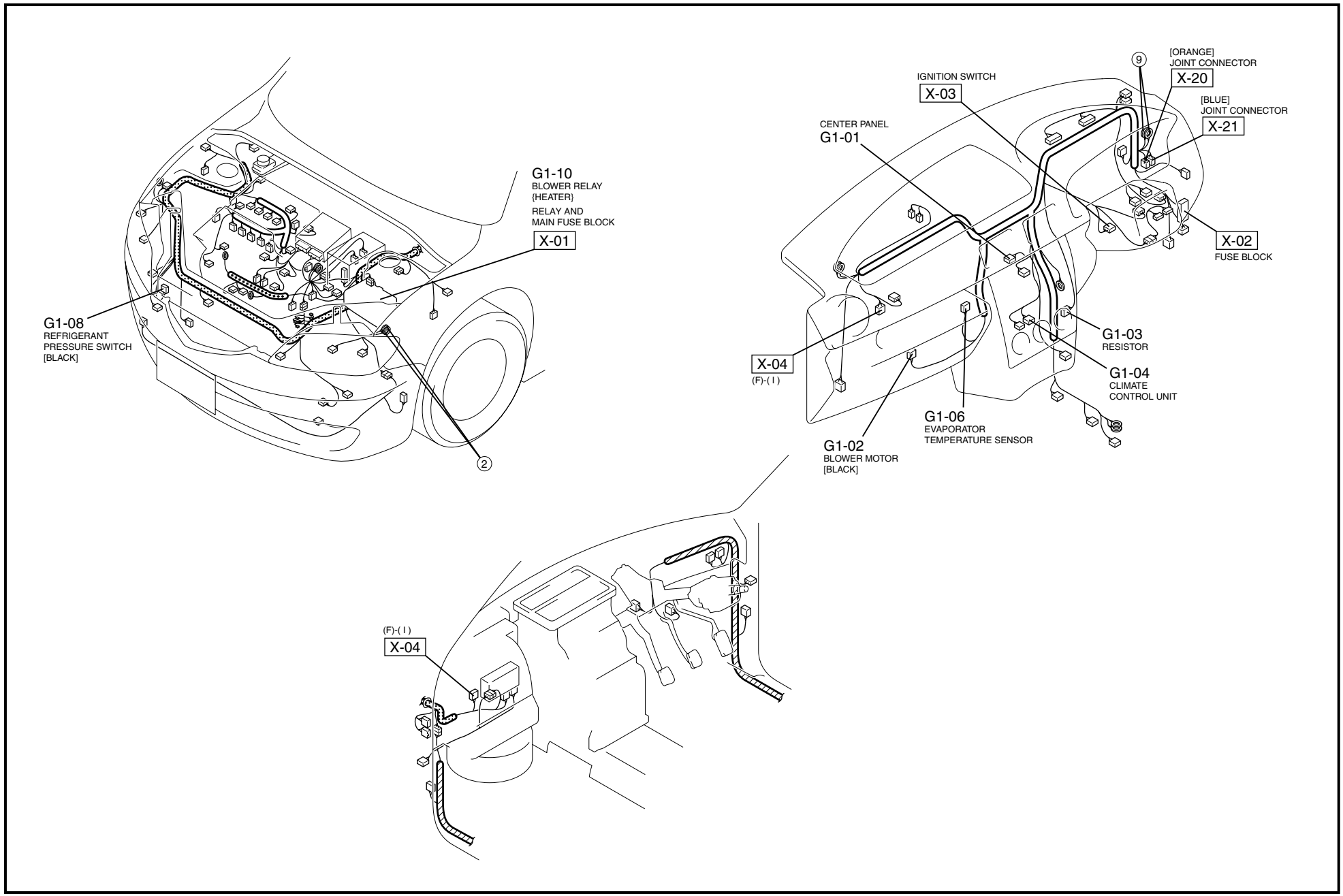

MAGNETIC CLUTCH CONTROL SYSTEM

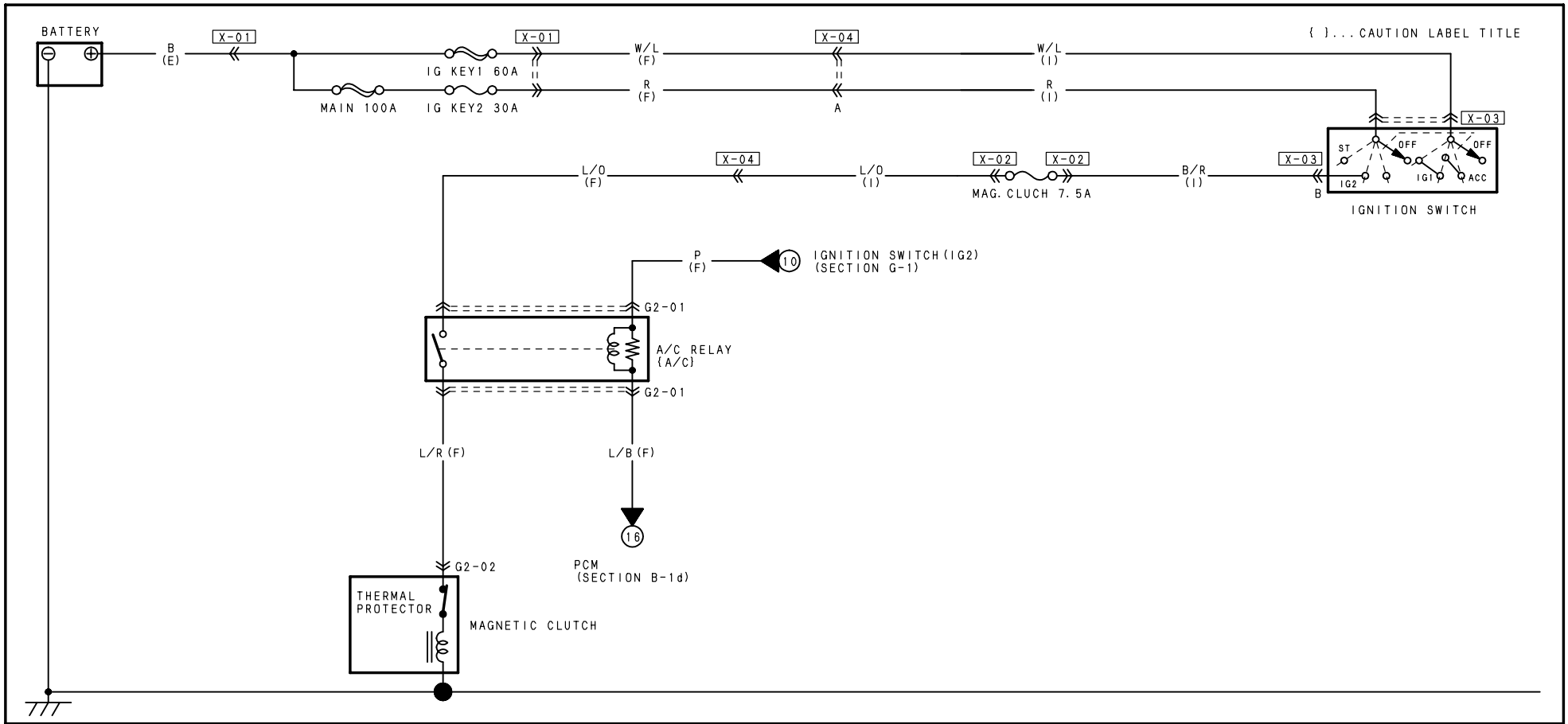

G2-01 A/C RELAY{A/C} (F)

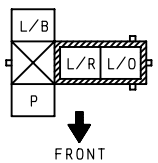

NOTE:THIS IS THE CONNECTOR AS SEEN FROM THE TERMINAL SIDE.

G2-02 MAGNETIC CLUTCH(F)

HARNESS SYMBOL: (F) (E) (R)

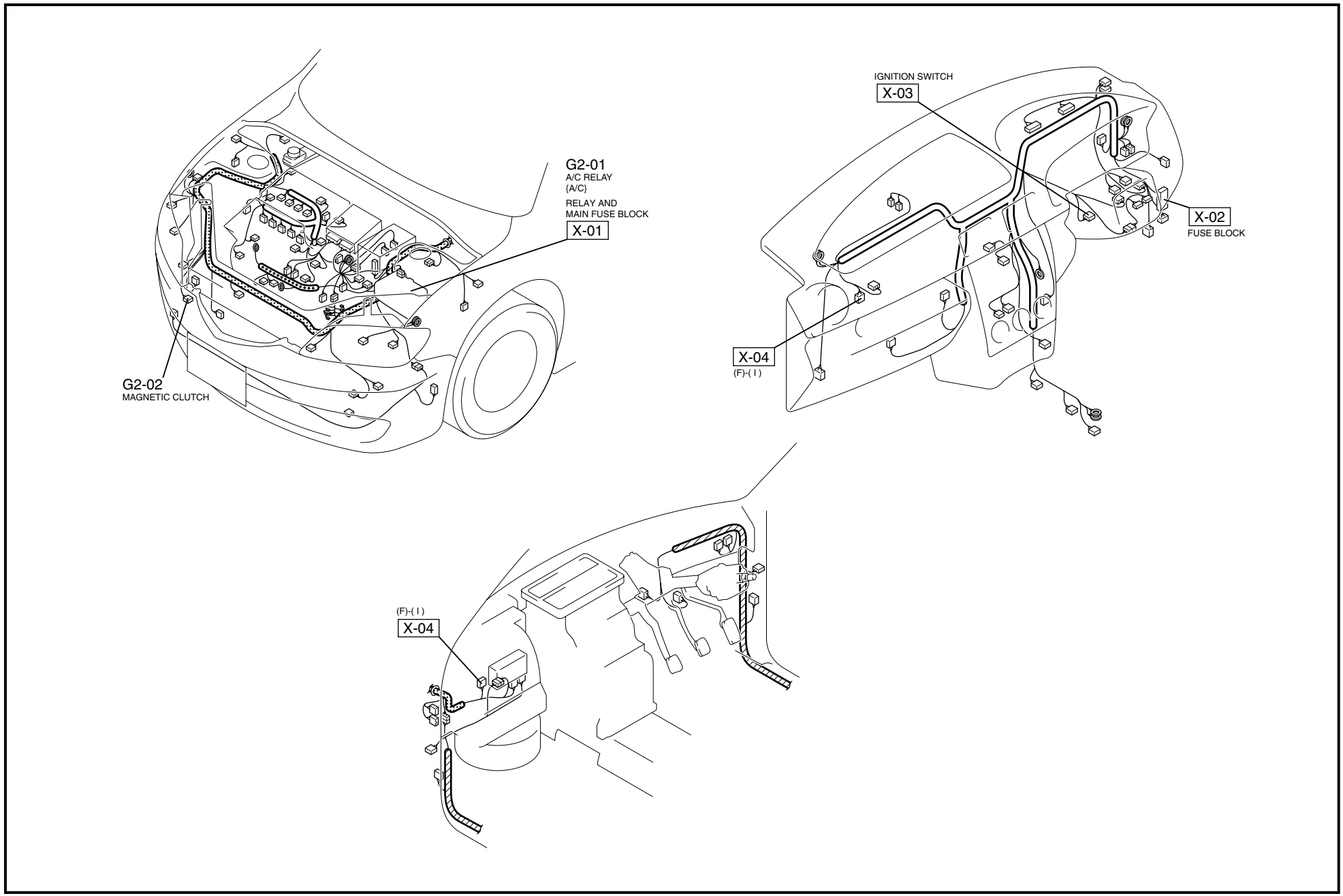

CIGARETTE LIGHTER / REAR WINDOW DEFROSTER

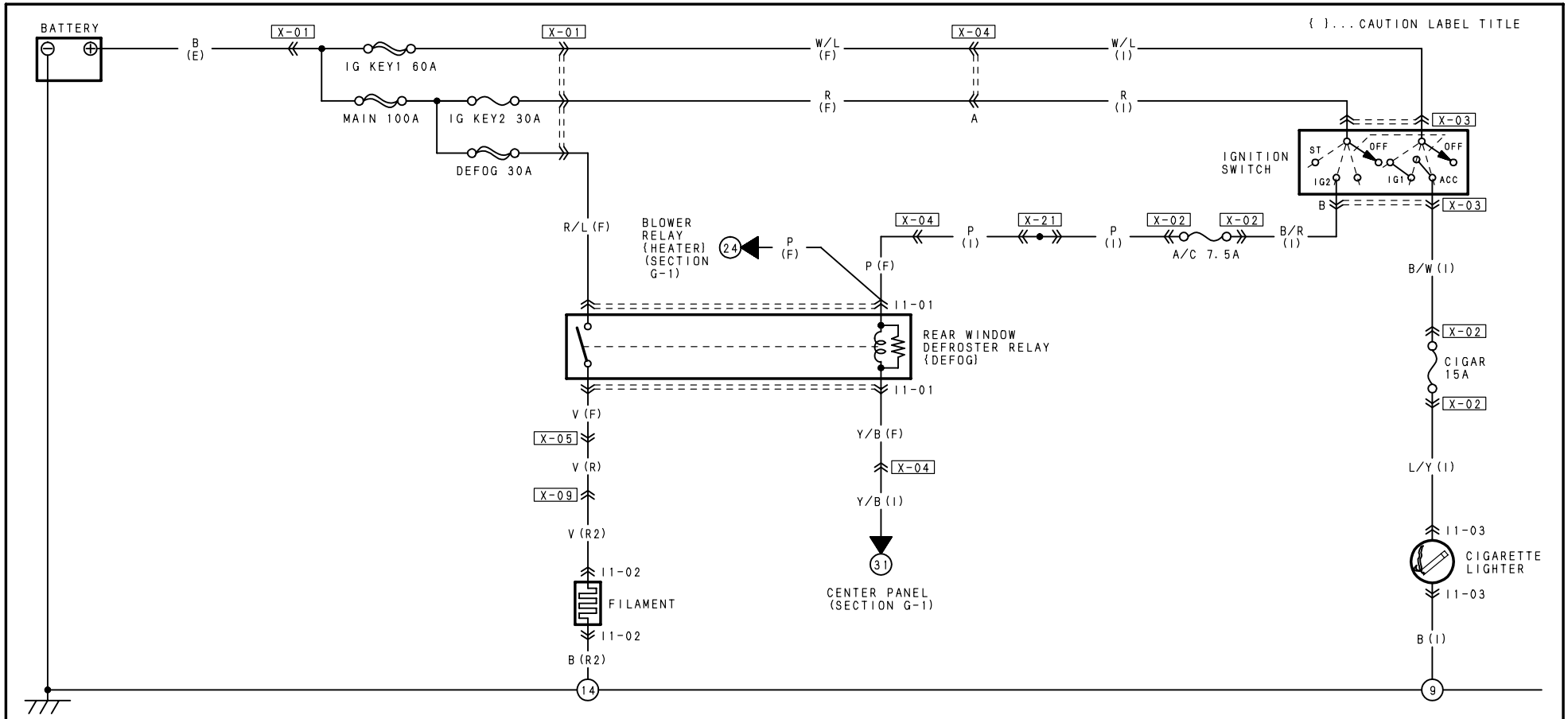

I1-01 REAR WINDOW DEFROSTER RELAY(DEFOG) (F)

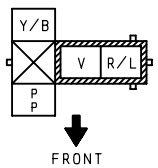

NOTE:THIS IS THE CONNECTOR AS SEEN FROM THE TERMINAL SIDE.

I1-02 FILAMENT(R2)

I1-03 CIGARETTE LIGHTER (I)

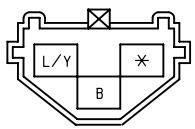

HARNESS SYMBOL: (F) (E) (R)

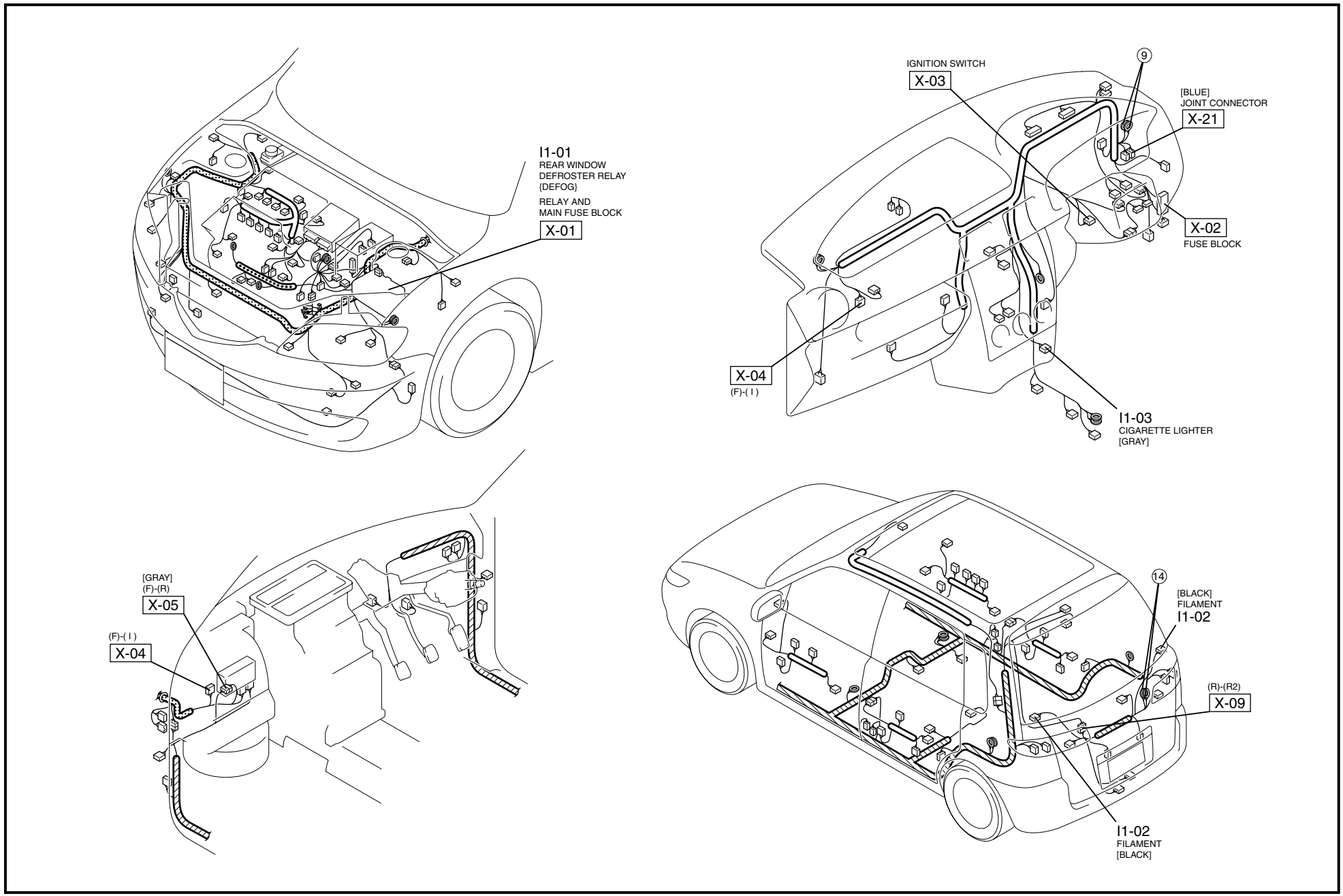

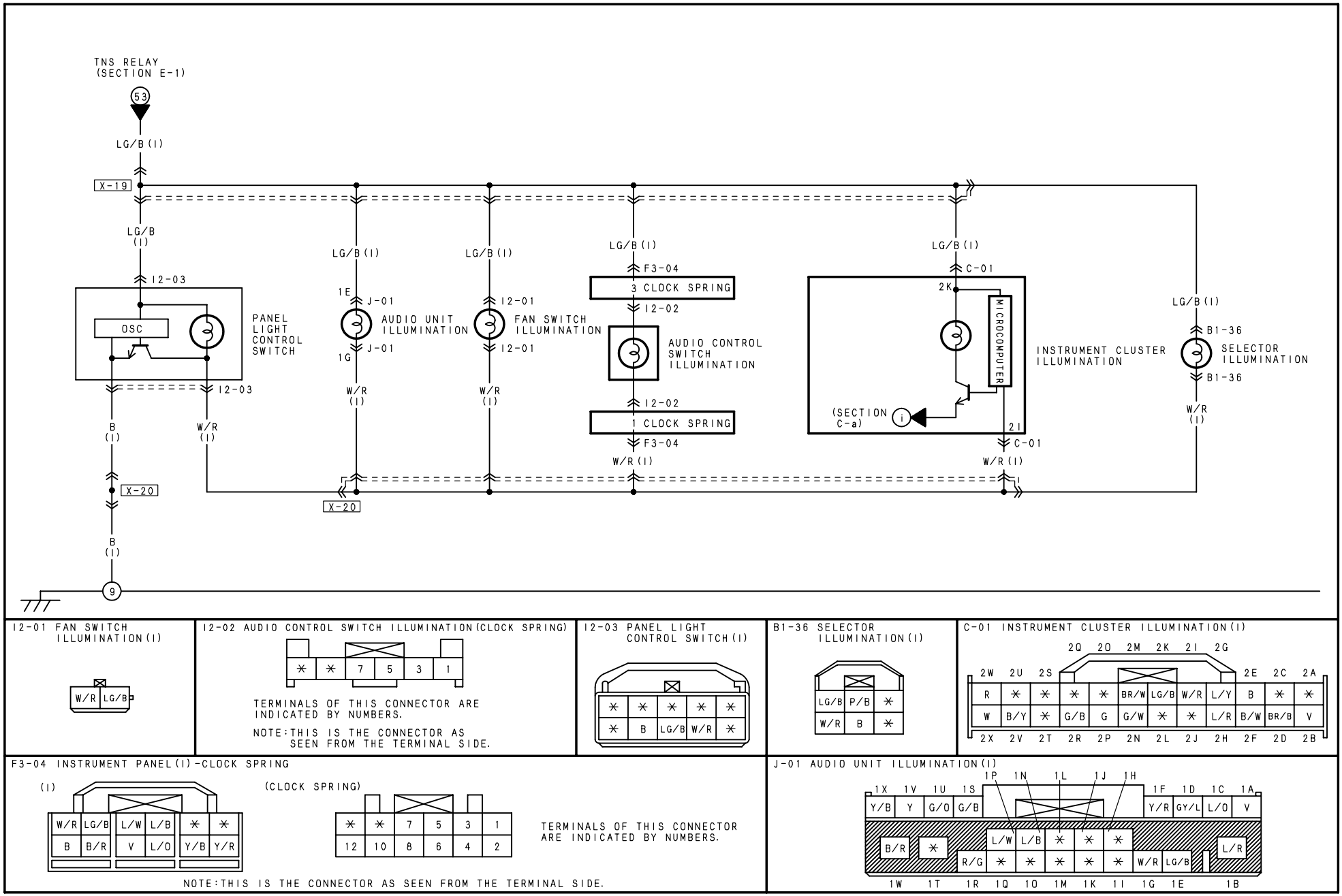

I2-01 FAN SWITCH ILLUMINATION (I)

I2-02 AUDIO CONTROL SWITCH ILLUMINATION (CLOCK SPRING)

TERMINALS OF THIS CONNECTOR ARE INDICATED BY NUMBERS.

NOTE: THIS IS THE CONNECTOR AS SEEN FROM THE TERMINAL SIDE.

I2-03 PANEL LIGHT CONTROL SWITCH (I)

B1-36 SELECTOR ILLUMINATION (I)

C-01 INSTRUMENT CLUSTER ILLUMINATION (I)

F3-04 INSTRUMENT PANEL (I) - CLOCK SPRING

(I)

(CLOCK SPRING)

TERMINALS OF THIS CONNECTOR ARE INDICATED BY NUMBERS.

NOTE: THIS IS THE CONNECTOR AS SEEN FROM THE TERMINAL SIDE.

J-01 AUDIO UNIT ILLUMINATION (I)

HARNESS SYMBOL: (F) (E) (R)

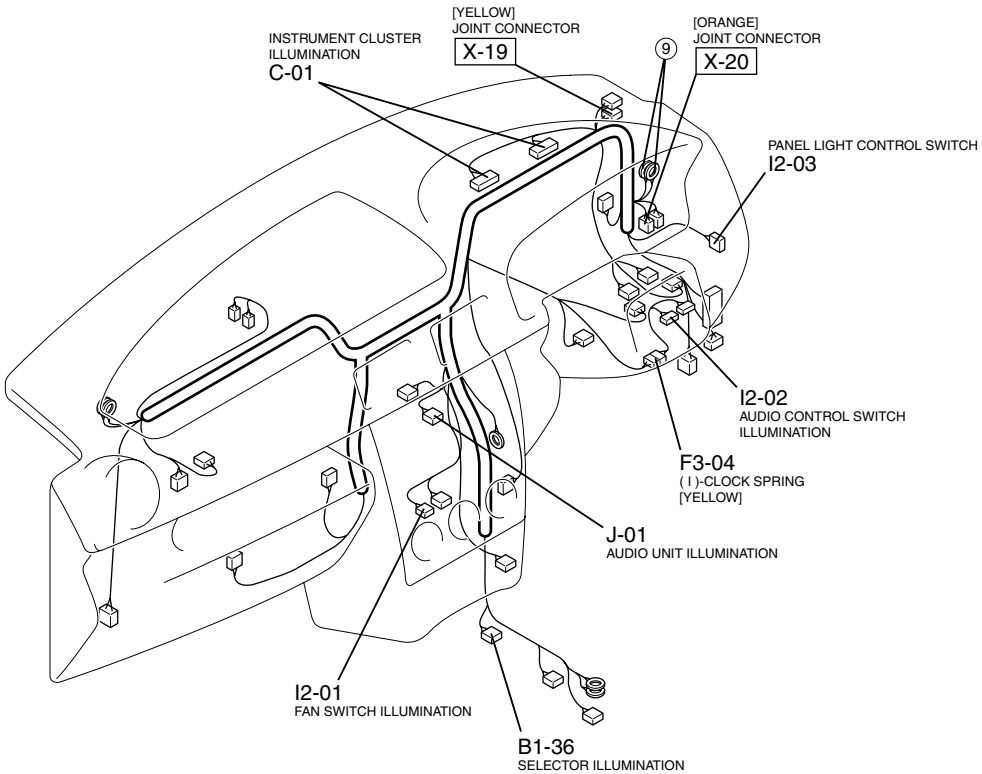

CARGO COMPARTMENT LIGHT / INTERIOR LIGHT

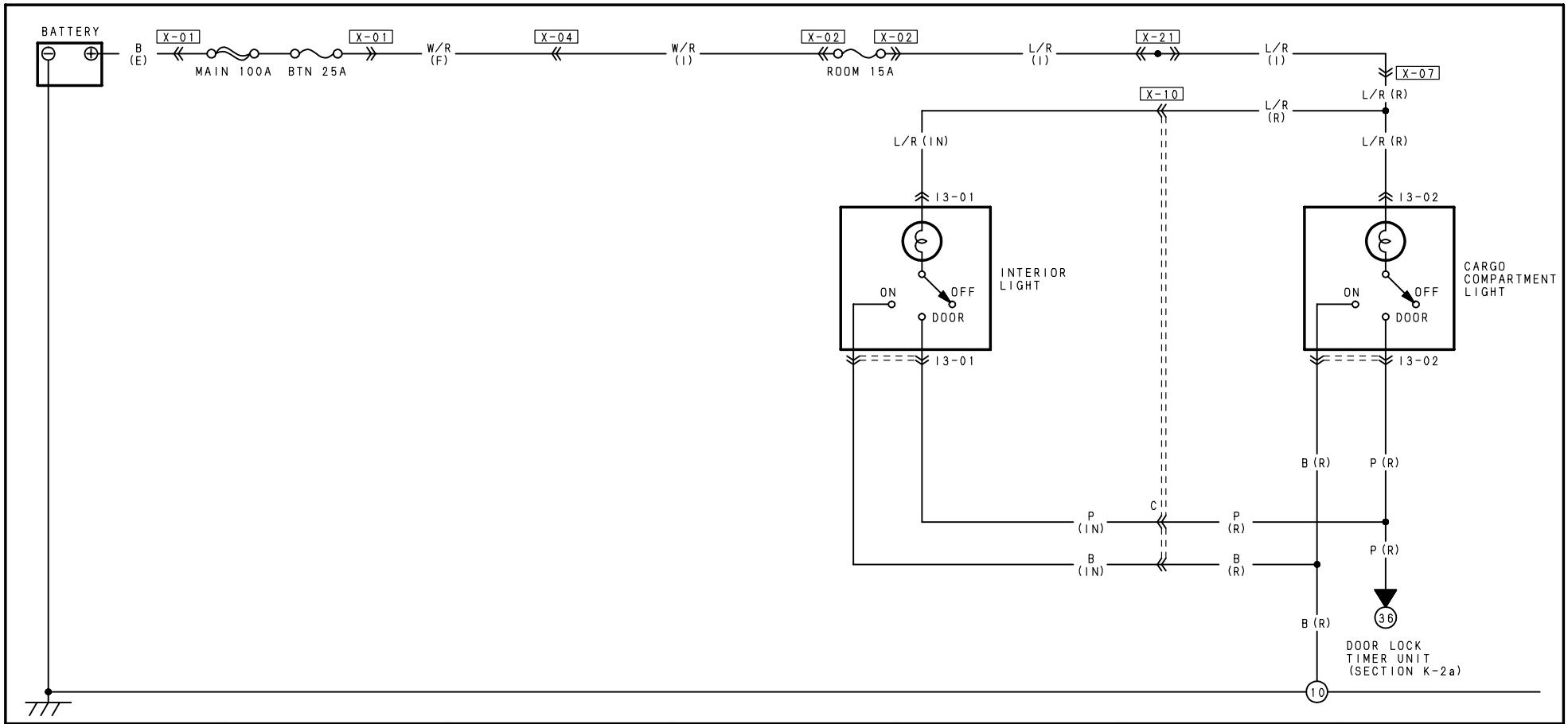

I3-01 INTERIOR LIGHT (IN)	I3-02 CARGO COMPARTMENT LIGHT (R)					
L/R P B ✳	L/R P B ✳					

HARNESS SYMBOL: (F) (E) (R)

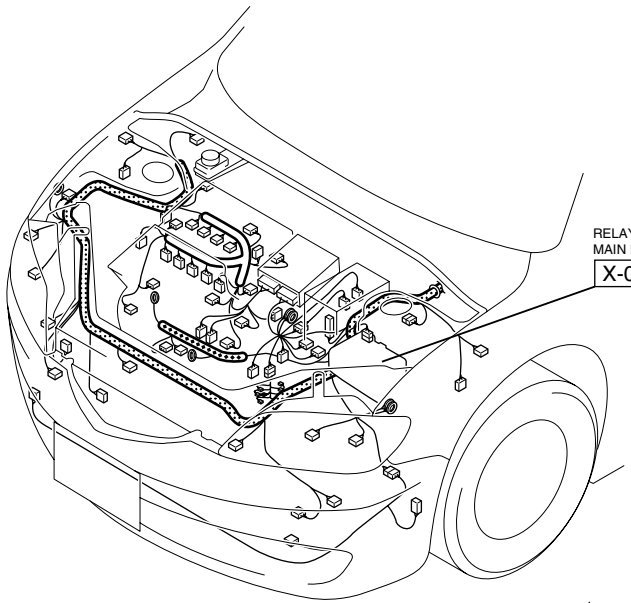

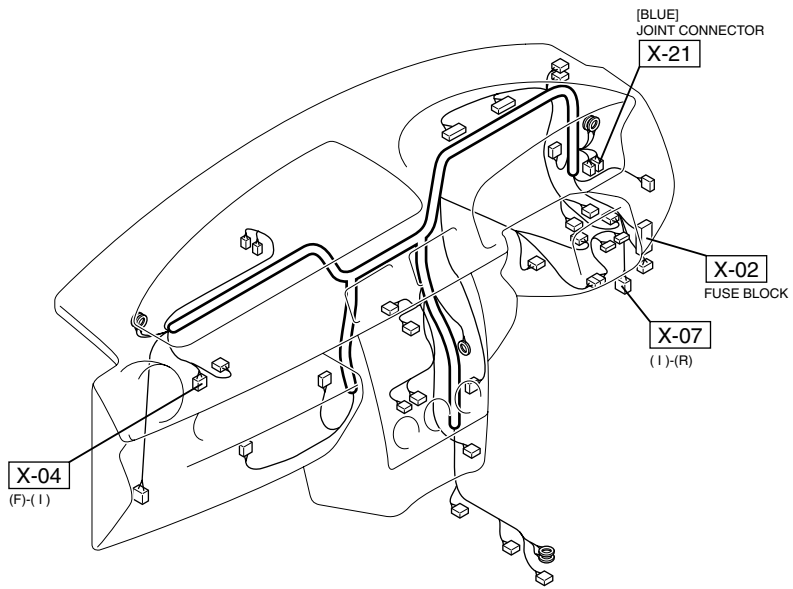

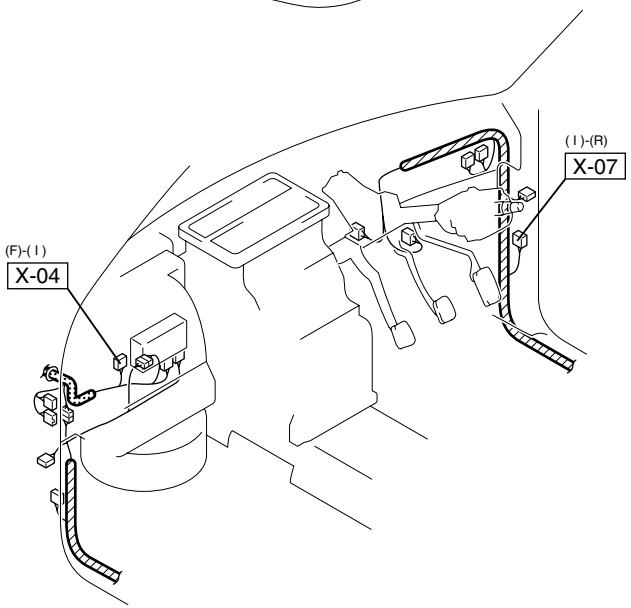

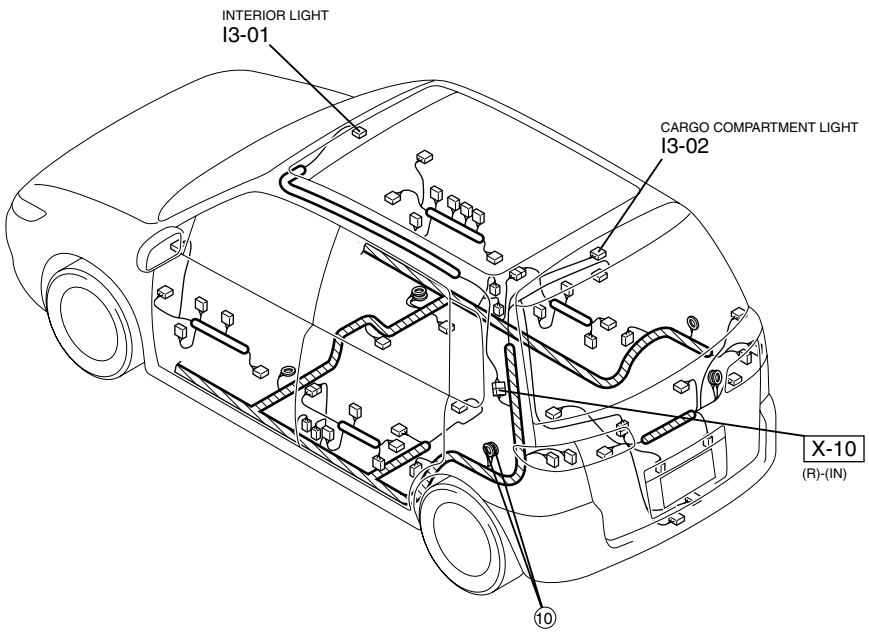

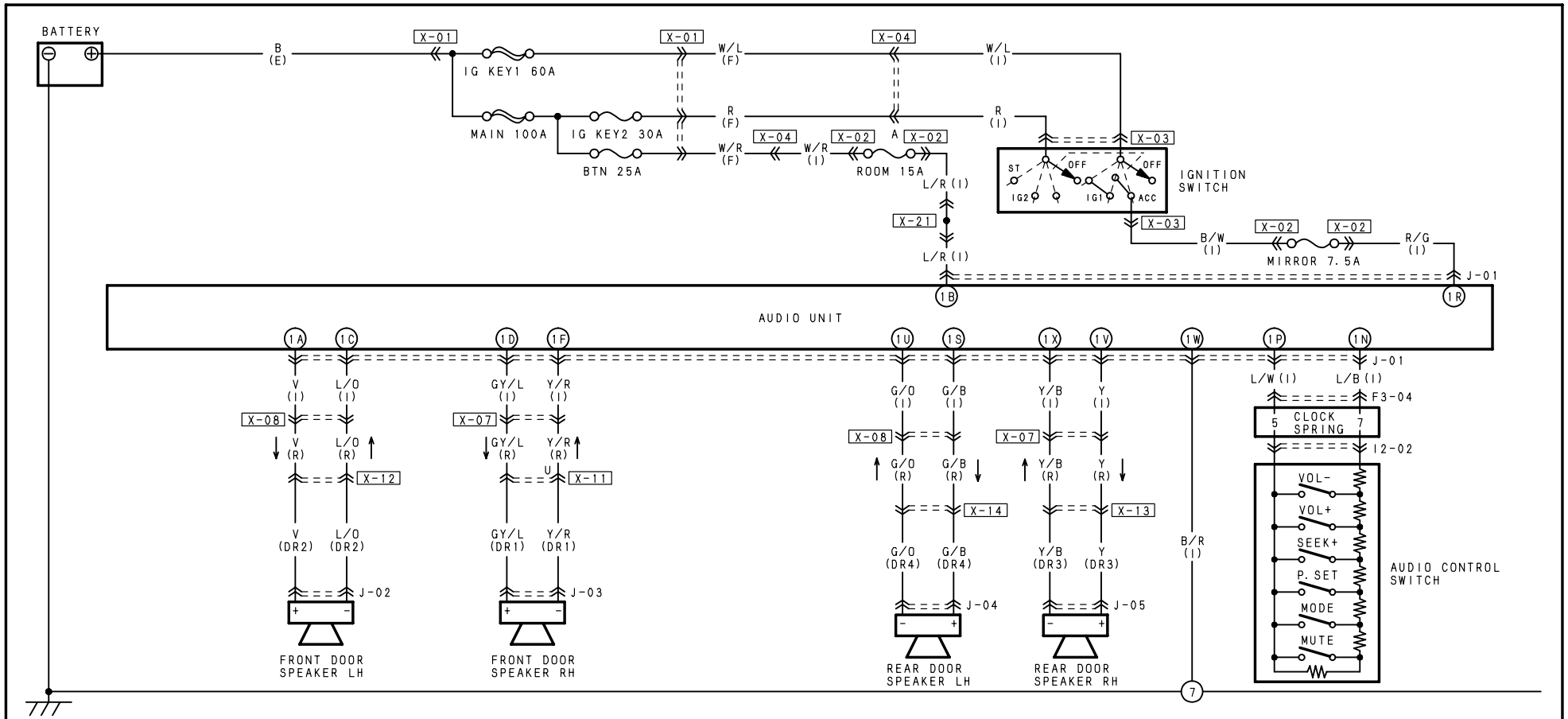

J-01 AUDIO UNIT(I)

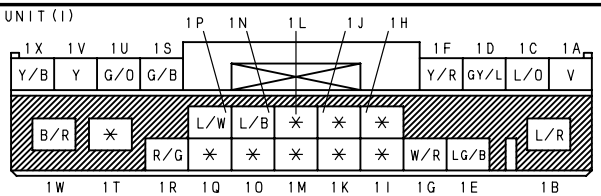

J-02 FRONT DOOR SPEAKER LH(DR2)

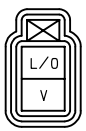

J-03 FRONT DOOR SPEAKER RH(DR1)

J-04 REAR DOOR SPEAKER LH(DR4)

J-05 REAR DOOR SPEAKER RH(DR3)

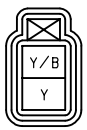

F3-04 INSTRUMENT PANEL(I)-CLOCK SPRING

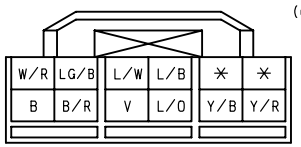

(CLOCK SPRING)

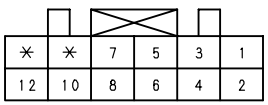

TERMINALS OF THIS CONNECTOR ARE INDICATED BY NUMBERS.

NOTE:THIS IS THE CONNECTOR AS SEEN FROM THE TERMINAL SIDE.

I2-02 AUDIO CONTROL SWITCH(CLOCK SPRING)

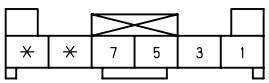

TERMINALS OF THIS CONNECTOR ARE INDICATED BY NUMBERS.

NOTE:THIS IS THE CONNECTOR AS SEEN FROM THE TERMINAL SIDE.

HARNESS SYMBOL: (F) (E) (R)

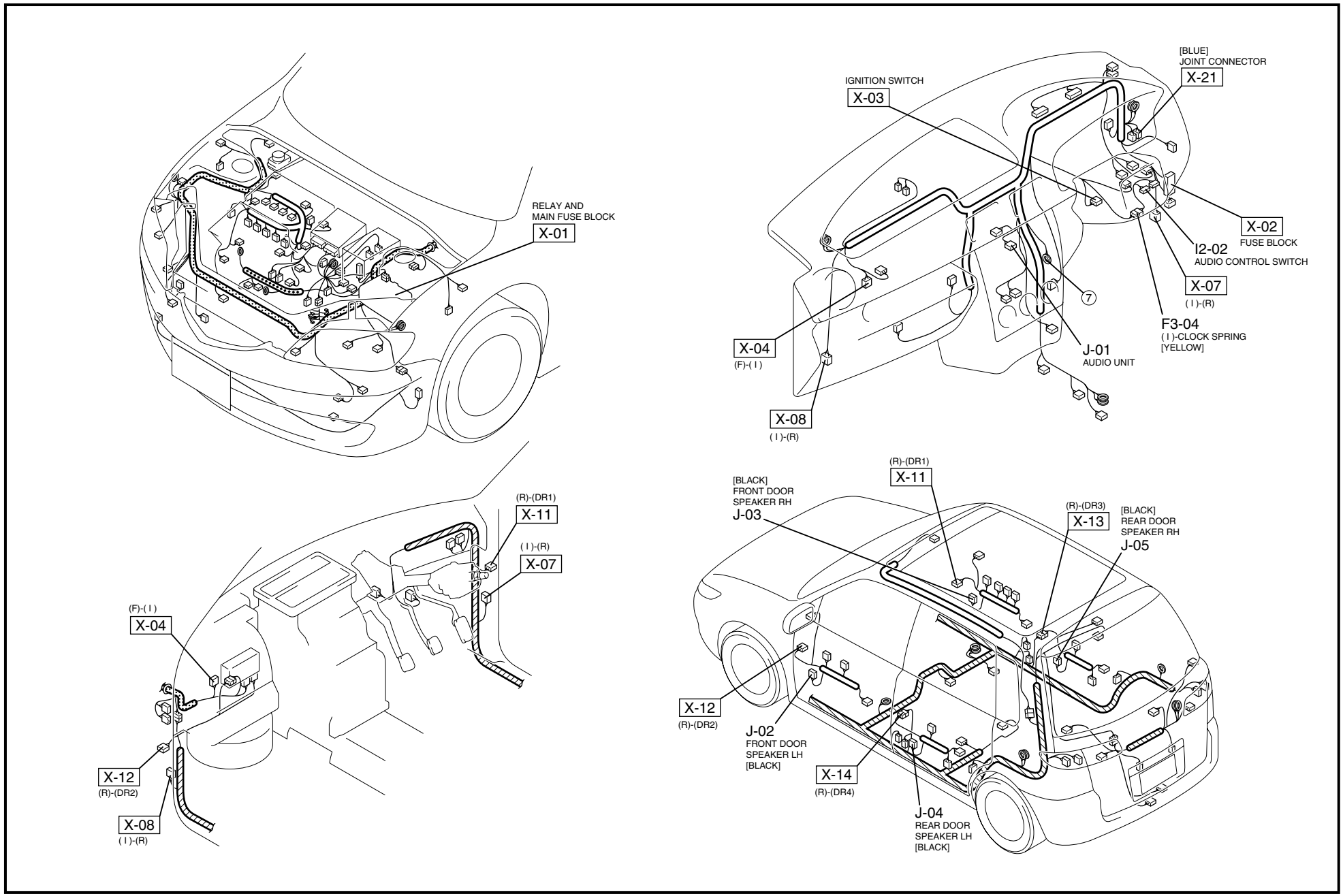

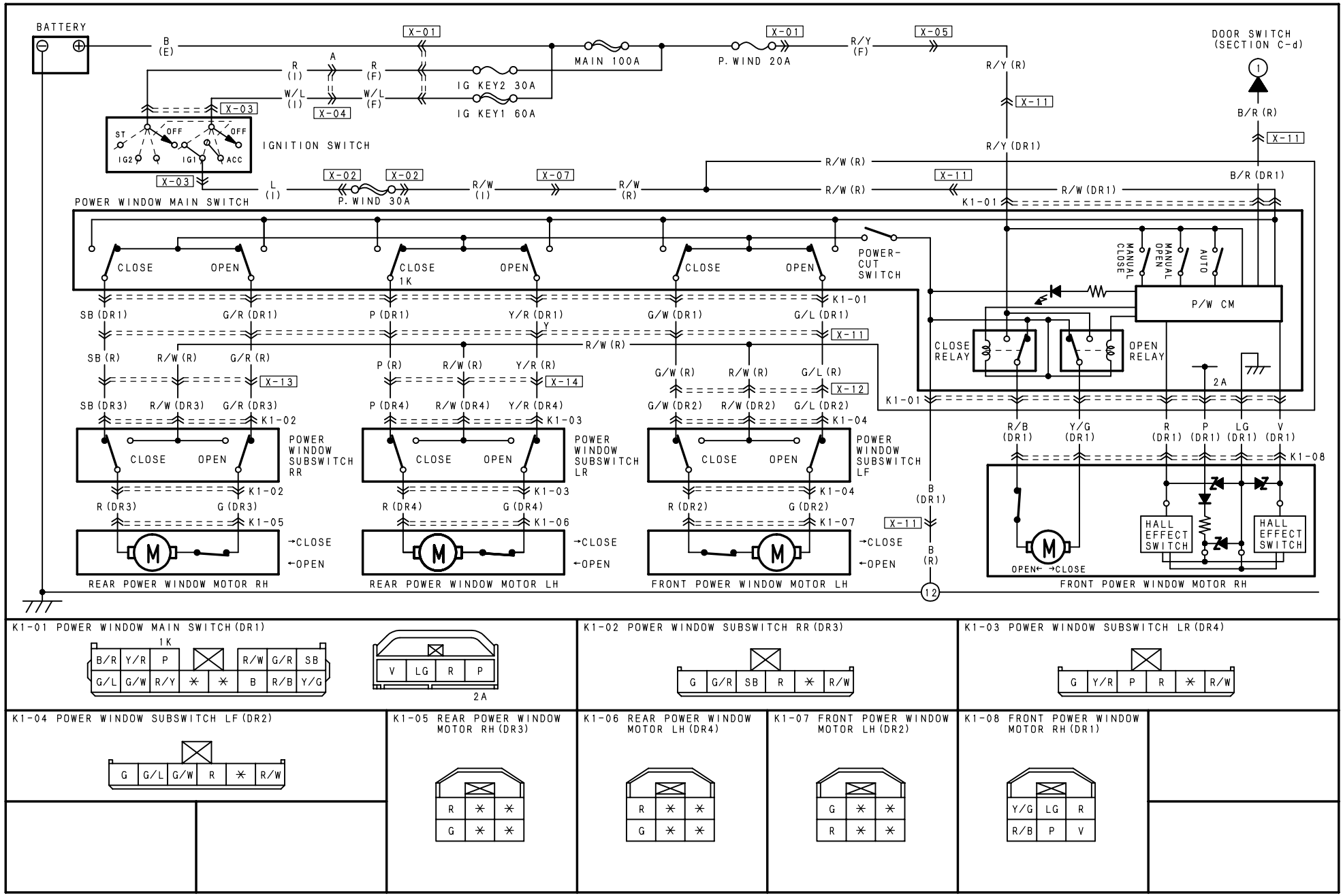

K1-01 POWER WINDOW MAIN SWITCH (DR1)

K1-02 POWER WINDOW SUBSWITCH RR (DR3)

K1-03 POWER WINDOW SUBSWITCH LR (DR4)

K1-04 POWER WINDOW SUBSWITCH LF (DR2)

K1-05 REAR POWER WINDOW MOTOR RH (DR3)

K1-06 REAR POWER WINDOW MOTOR LH (DR4)

K1-07 FRONT POWER WINDOW MOTOR LH (DR2)

K1-08 FRONT POWER WINDOW MOTOR RH (DR1)

HARNESS SYMBOL: (F) (E) (R)

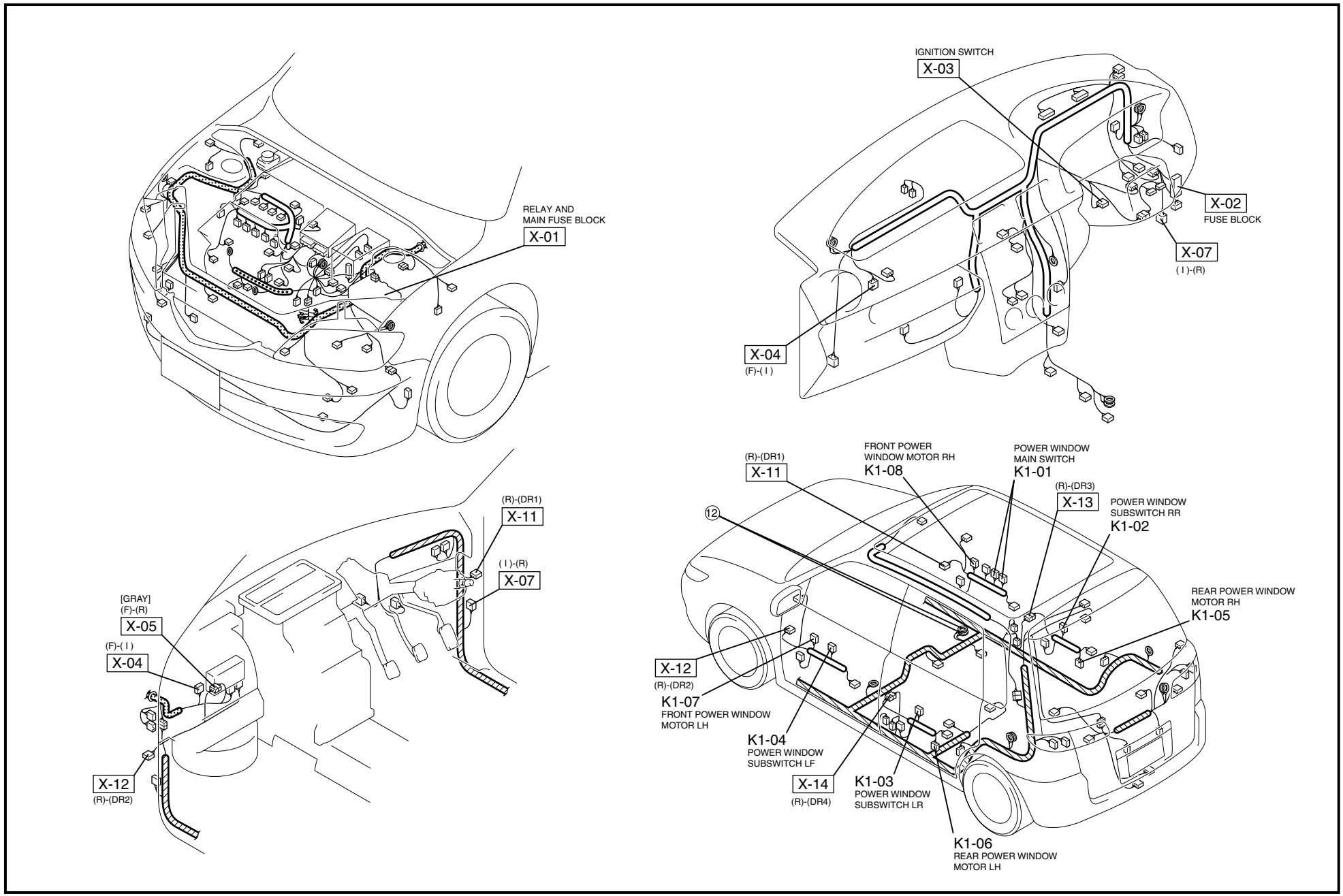

POWER DOOR LOCK SYSTEM

K-2a

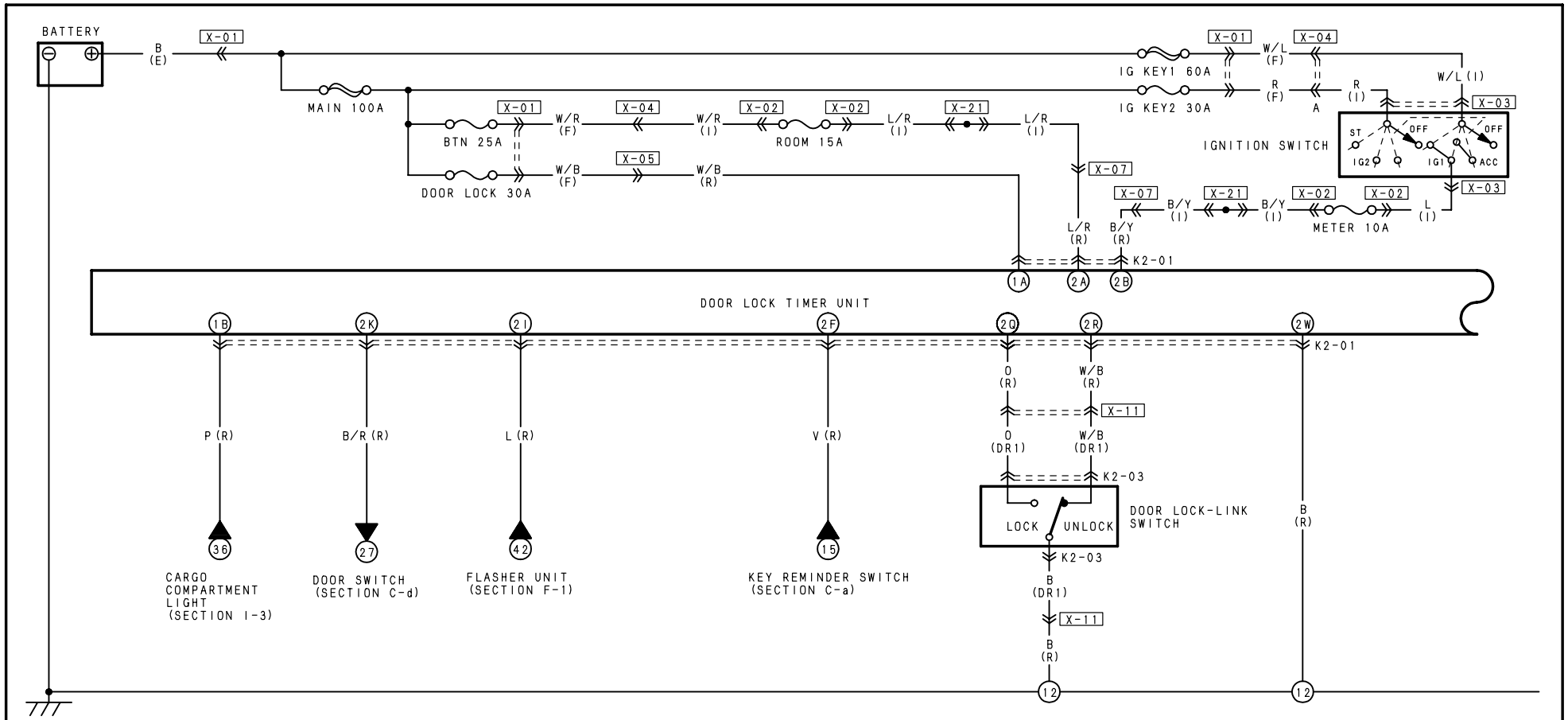

K2-01 DOOR LOCK TIMER UNIT(R)

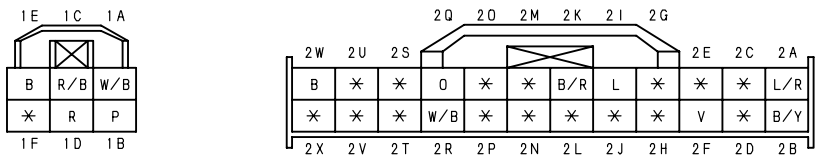

K2-03 DOOR LOCK-LINK SWITCH(DR1)

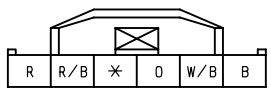

HARNESS SYMBOL: (F) (E) (R)

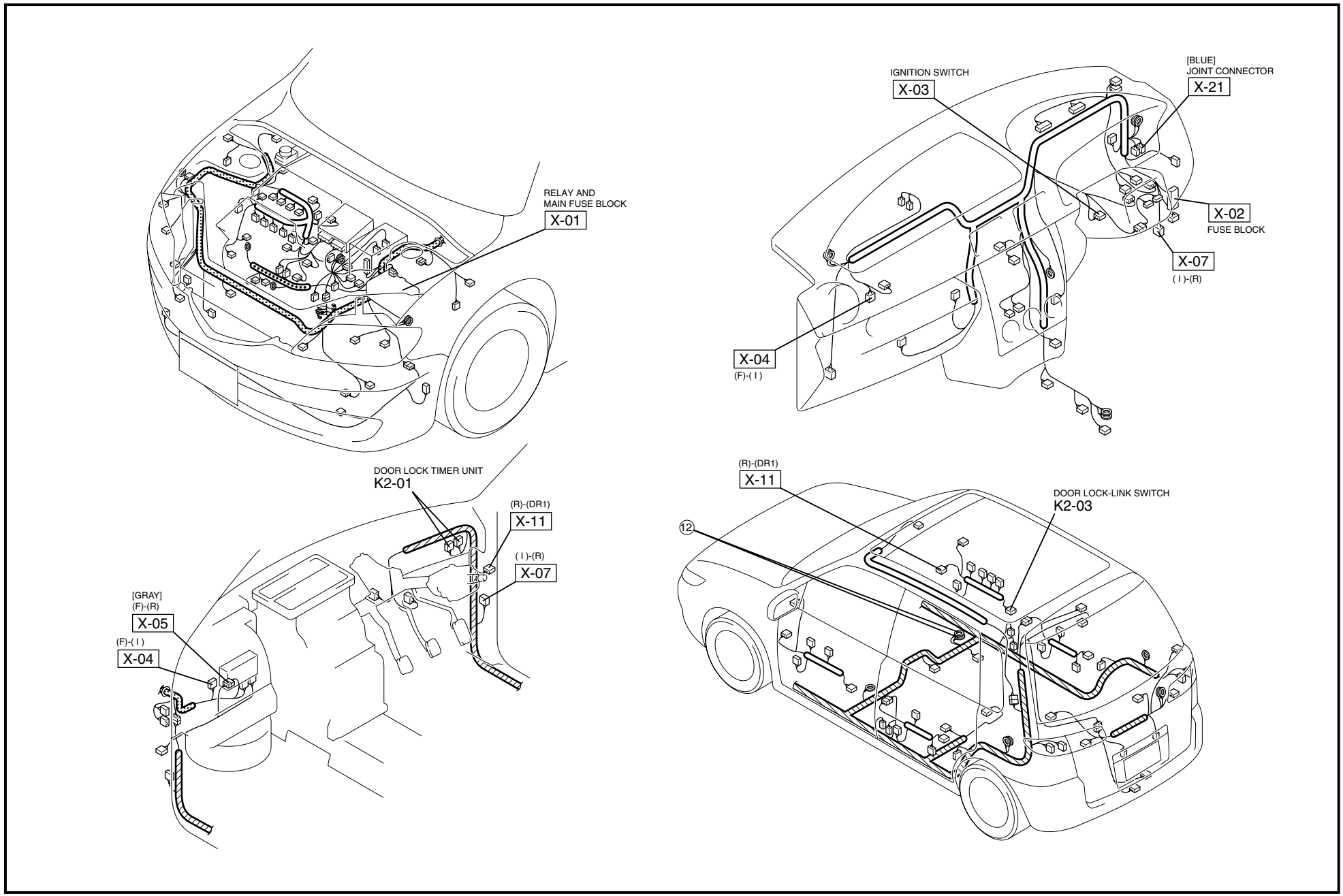

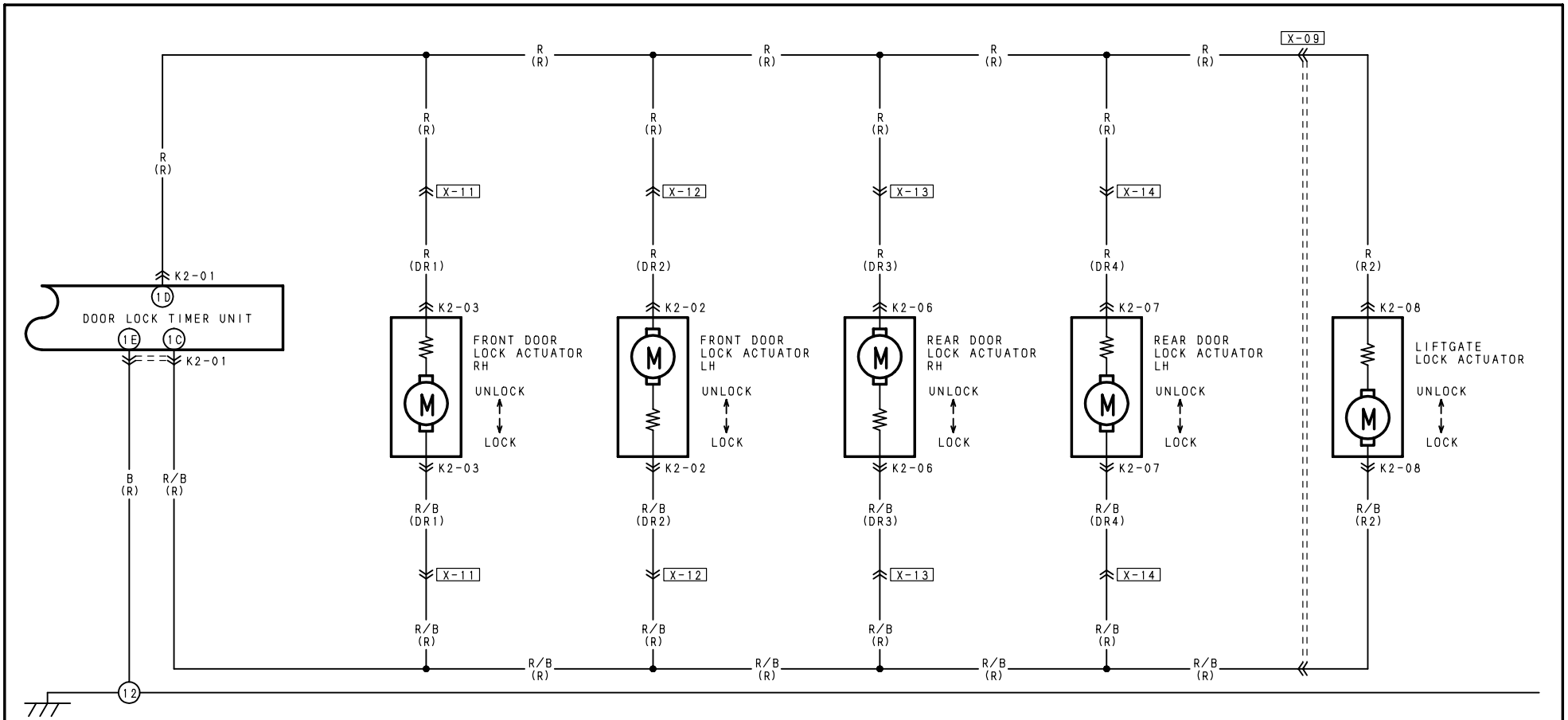

K2-01 DOOR LOCK TIMER UNIT (R)

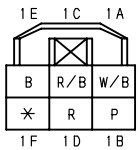

K2-02 FRONT DOOR LOCK ACTUATOR LH (DR2)

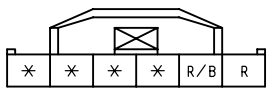

K2-03 FRONT DOOR LOCK ACTUATOR RH (DR1)

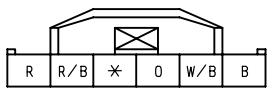

K2-06 REAR DOOR LOCK ACTUATOR RH (DR3)

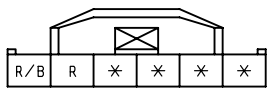

K2-07 REAR DOOR LOCK ACTUATOR LH (DR4)

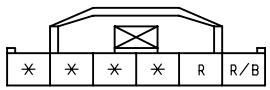

K2-08 LIFTGATE LOCK ACTUATOR (R2)

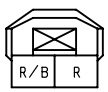

HARNESS SYMBOL: (F) (E) (R)

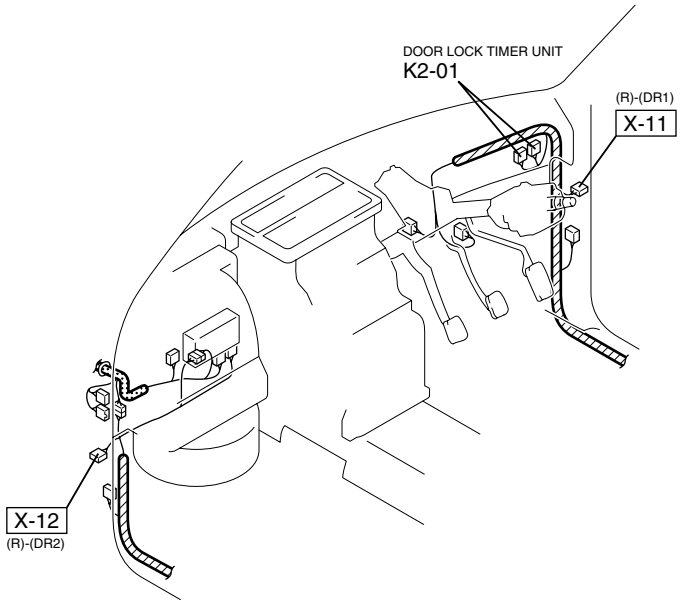

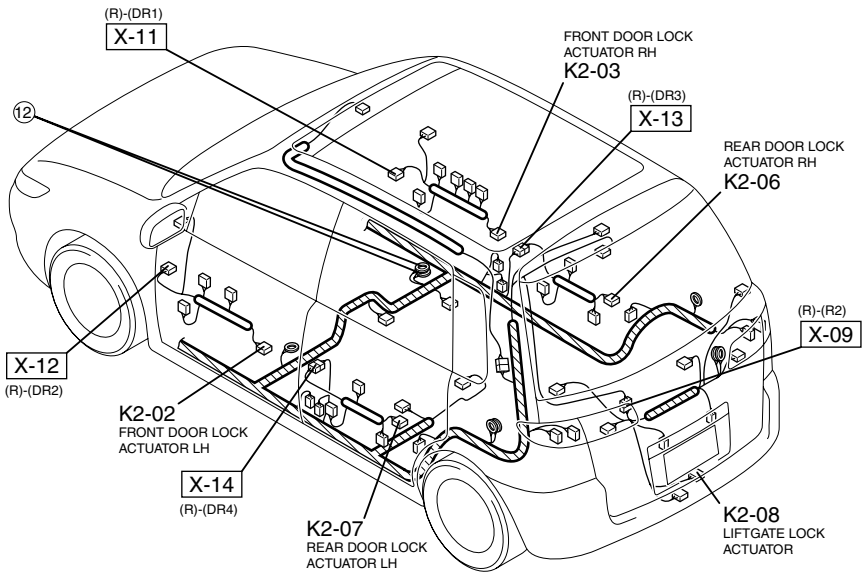

POWER OUTSIDE MIRROR

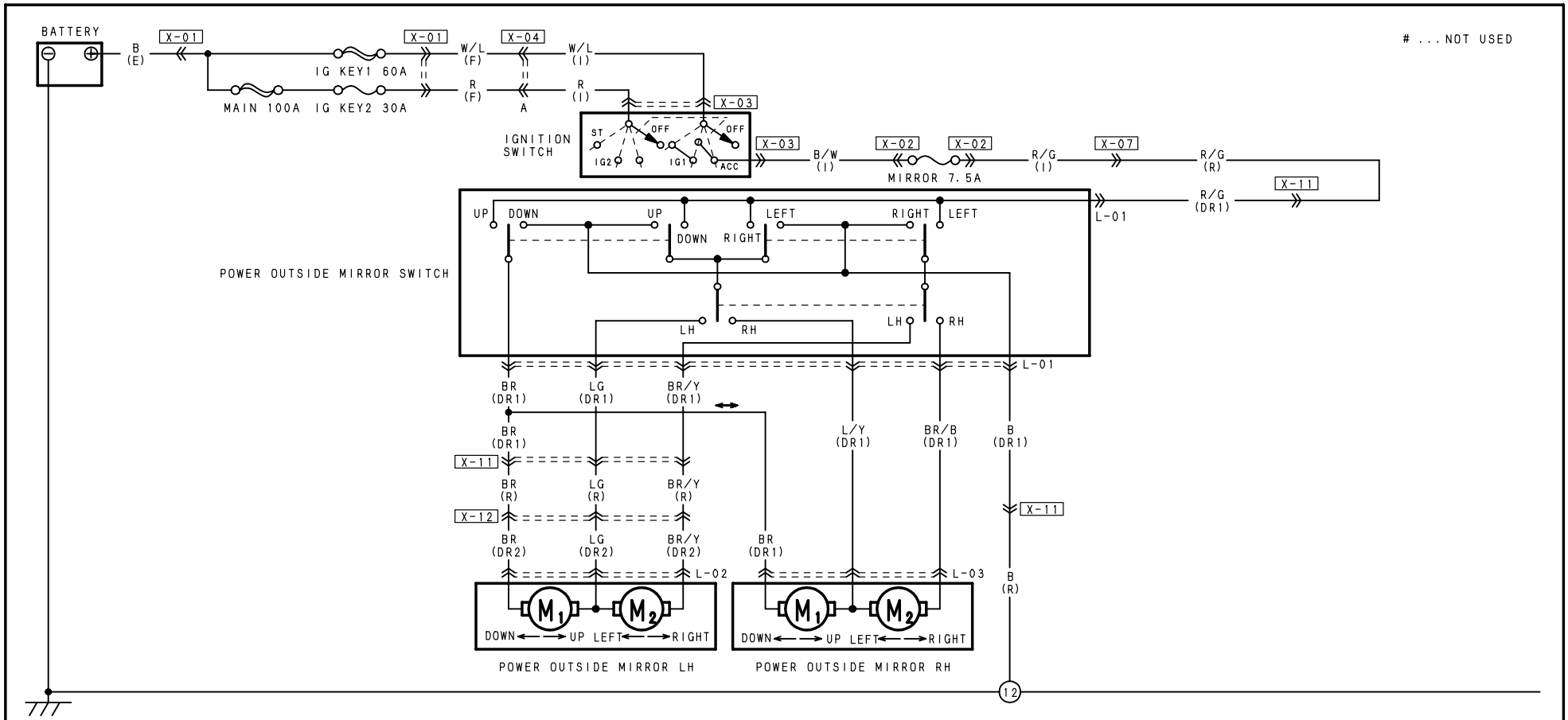

L-01 POWER OUTSIDE MIRROR SWITCH (DR1)

BR/B	BR			✳	#Y/B
BR/Y	L/Y	LG	R/G	B	#W/L

L-02 POWER OUTSIDE MIRROR LH (DR2)

#Y/B	✳	✳	#W/L
✳	BR/Y	LG	BR

L-03 POWER OUTSIDE MIRROR RH (DR1)

#Y/B	✳	✳	#W/L
✳	BR/B	L/Y	BR

HARNESS SYMBOL: (F) (E) (R)

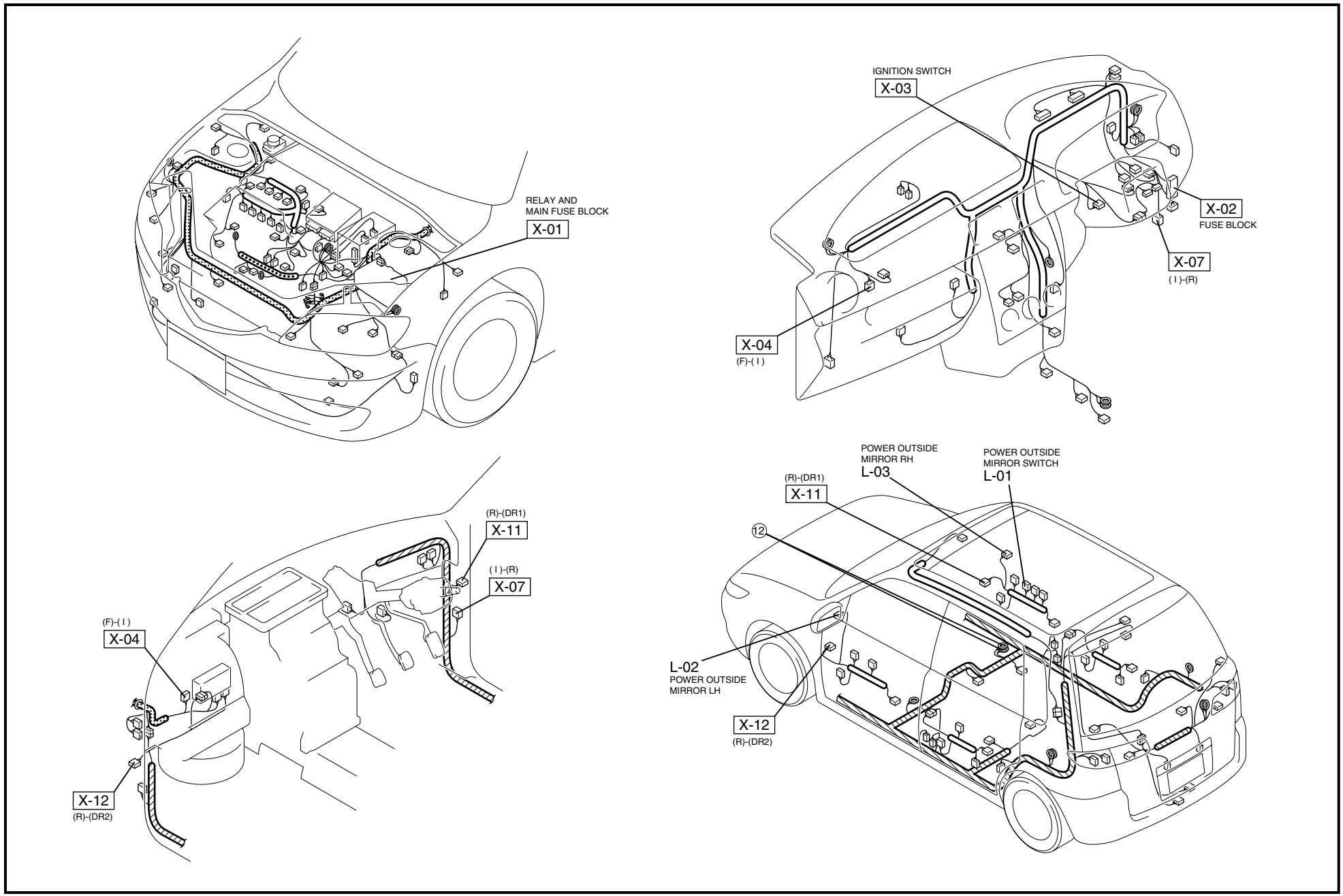

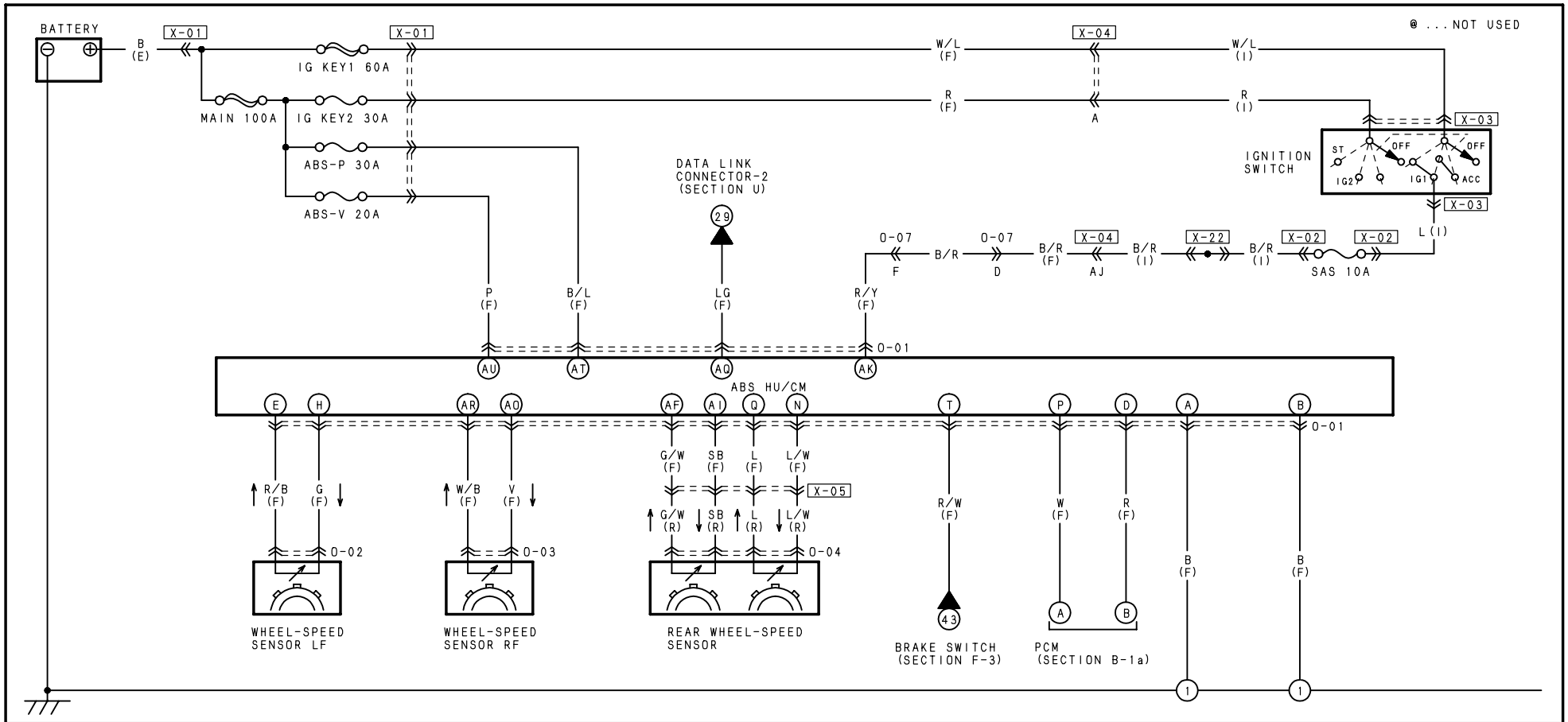

O-01 ABS HU/CM (F)

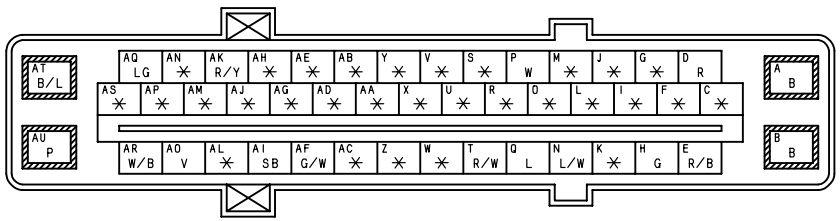

O-02 WHEEL-SPEED SENSOR LF (F)

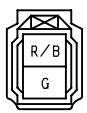

O-03 WHEEL-SPEED SENSOR RF (F)

O-04 REAR WHEEL-SPEED SENSOR (R)

O-07 FRONT (F) -SHORT CONNECTOR

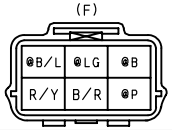

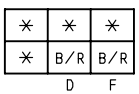

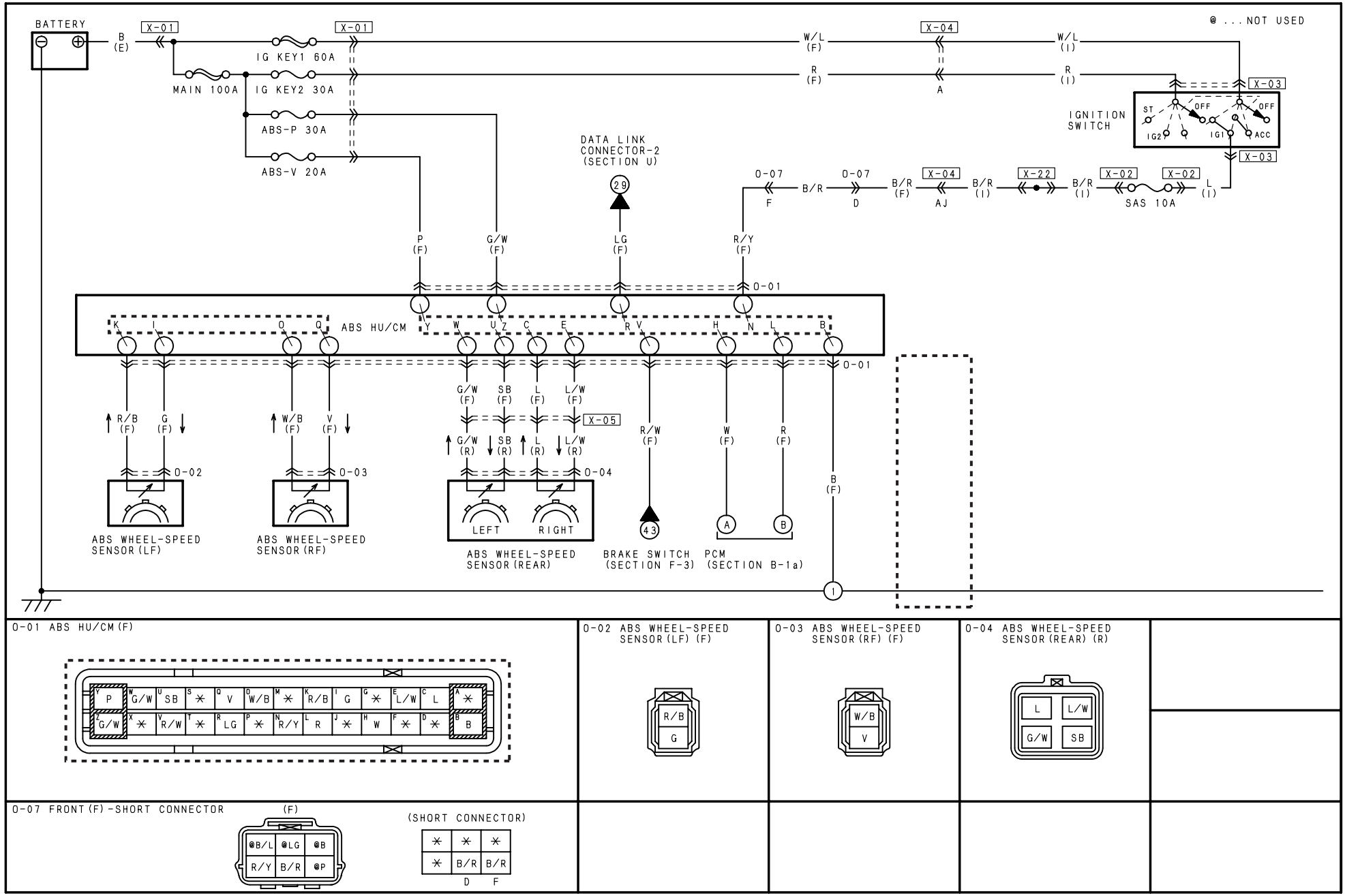
BATTERY
B (E)
X-01
IG KEY1 60A
MAIN 100A
IG KEY2 30A
ABS-P 30A
ABS-V 20A
W/L (F)
R (F)
X-04
A
W/L (I)
R (I)
@ . . . NOT USED
X-03
IGNITION SWITCH
ST
OFF
IG2
IG1
ACC
DATA LINK CONNECTOR-2 (SECTION U)
29
O-07
F
B/R
D
B/R (F)
AJ
B/R (I)
X-22
X-02
SAS 10A
L (I)
P (F)
G/W (F)
LG (F)
R/Y (F)
O-01
ABS HU/CM
K
I
O
Q
Y
W
U
Z
C
E
R
V
H
N
L
B
R/B (F)
G (F)
W/B (F)
V (F)
G/W (F)
SB (F)
L (F)
L/W (F)
X-05
G/W (R)
SB (R)
L (R)
L/W (R)
R/W (F)
W (F)
R (F)
O-02
O-03
O-04
LEFT
RIGHT
43
A
B
B (F)
1
ABS WHEEL-SPEED SENSOR (LF)
ABS WHEEL-SPEED SENSOR (RF)
ABS WHEEL-SPEED SENSOR (REAR)
BRAKE SWITCH (SECTION F-3)
PCM (SECTION B-1a)
O-01 ABS HU/CM (F)
O-02 ABS WHEEL-SPEED SENSOR (LF) (F)
O-03 ABS WHEEL-SPEED SENSOR (RF) (F)
O-04 ABS WHEEL-SPEED SENSOR (REAR) (R)
O-07 FRONT (F) -SHORT CONNECTOR
(F)
@B/L
@LG
@B
R/Y
B/R
@P
(SHORT CONNECTOR)
D
F

HARNESS SYMBOL: (F) (E) (R)

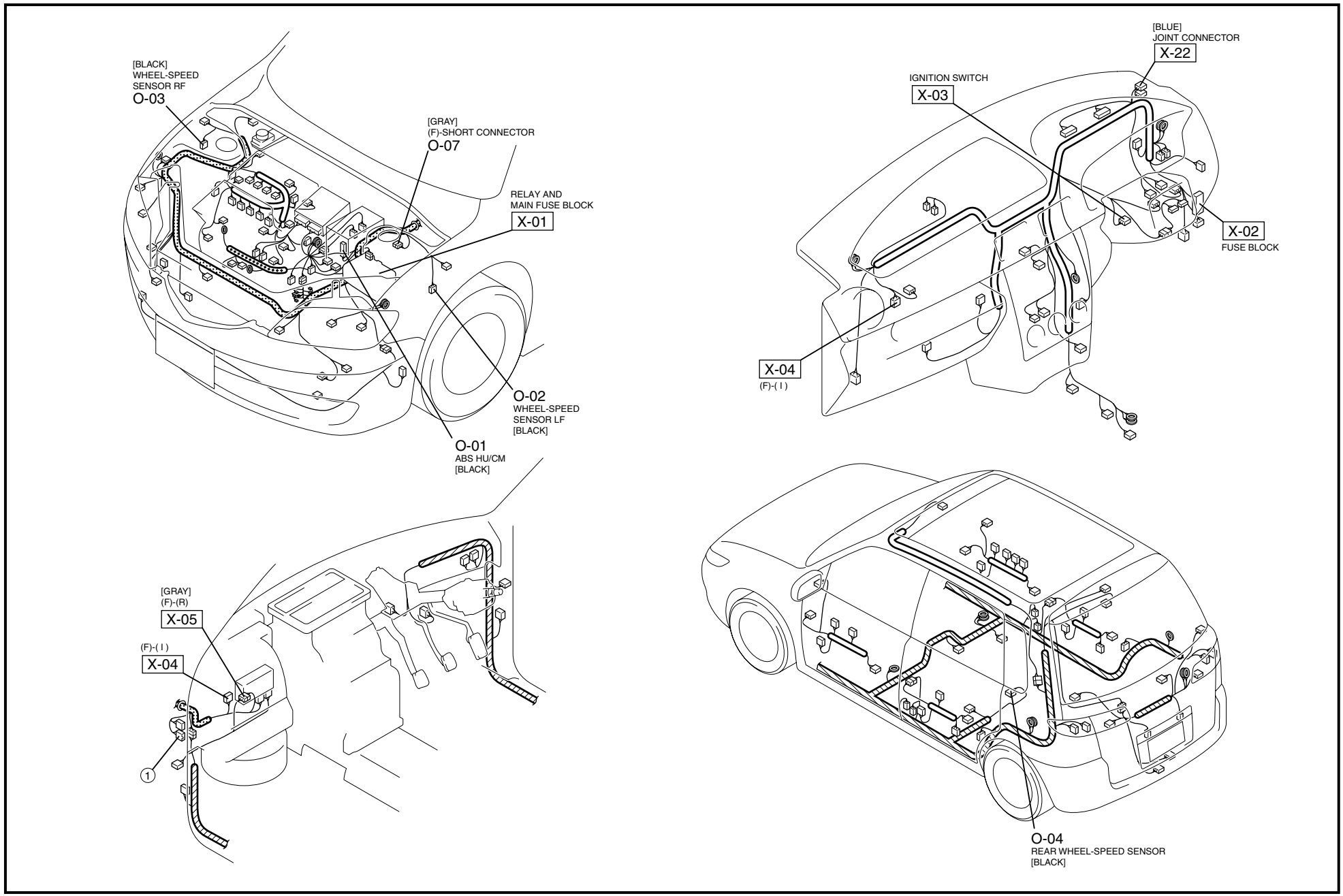

AIR BAG SYSTEM

SERVICE WARNINGS

ADA813001046W01

Air Bag Module and Pre-tensioner Seat Belt Inspection

- **Inspecting an air bag module and pre-tensioner seat belt using a tester can deploy the air bag module and pre-tensioner seat belt, which may cause serious injury. Do not use an ohmmeter to inspect an air bag module and pre-tensioner seat belt. Always use the on-board diagnostic to diagnose the air bag module for malfunctions.**

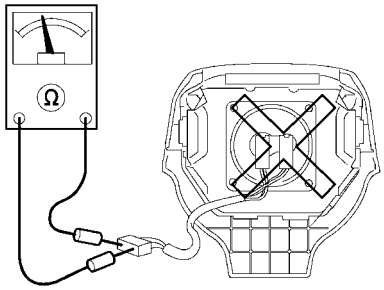

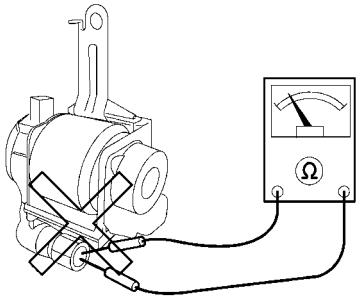

ADJ8130W001

Air Bag Module Handling

- **A live (undeployed) air bag module may accidentally deploy when it is handled and cause serious injury. When carrying a live (undeployed) air bag module, point the front surface away from your body to lessen the chance of injury in case it deploys.**

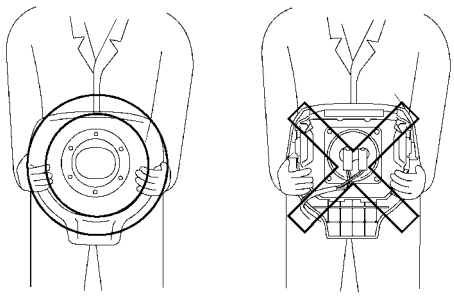

ADJ8130W002

- **A live (undeployed) air bag module placed face down on a surface is dangerous. If the air bag module deploys, the motion of the module can cause serious injury. Always face the front surface up to reduce the motion of the module in case it accidentally deploys.**

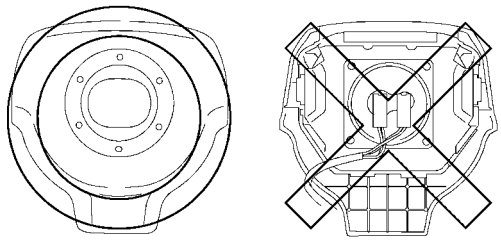

ADJ8130W003

SAS Unit Handling

- **Disconnecting the SAS unit connector or removing the SAS unit with the ignition switch in the ON position can cause the air bag modules to deploy, which may seriously injure you. Before disconnecting the SAS unit connector or removing the SAS unit, turn the ignition switch to the LOCK position, then disconnect the negative battery cable and wait for more than 1 minute to allow the backup power supply of the SAS unit to deplete its stored power.**
- **Connecting the SAS unit connector without firmly installing the SAS unit to the vehicle is dangerous. The crash sensor inside the control module may send an electrical signal to the air bag modules. This will deploy the air bag modules, which may result in serious injury. Therefore, before connecting the connector, firmly mount the control module to the vehicle.**
- **For vehicles with a single point sensor, once an air bag module is deployed due to an accident or other causes, the SAS unit must be replaced with a new one even if the used one does not have any external signs of damage. The used SAS unit may have been damaged internally which may cause improper operation, resulting in major injuries or even death. The used single point SAS unit cannot be bench-checked or self-checked.**

Crash Zone Sensor Handling

- **Disconnecting the crash zone sensor connector or removing the crash zone sensor with the ignition switch in the ON position can cause the crash zone sensor to operate and the air bag modules and pre-tensioner seat belts to deploy, which may seriously injure you. Before disconnecting the crash zone sensor connector or removing the crash zone sensor, always turn the ignition switch to the LOCK position, then disconnect the negative battery cable and wait for more than 1 minute to allow the backup power supply of the SAS control module to deplete its stored power.**

- If the crash zone sensor is subjected to shock or the sensor is disassembled, the air bag modules and pre-tensioner seat belts may operate (deploy) suddenly and cause injury, or it may fail to operate normally and cause a serious accident. Do not subject the crash zone sensor to shock or disassemble the sensor.
- Because a sensor is built into the crash zone sensor, when the air bag modules and pre-tensioner seat belts operates (deploys), there may be a problem, such as an internal malfunction, even if there is not any external damage or deformation. If the crash zone sensor is reused, the air bag modules and pre-tensioner seat belts may fail to operate normally and cause a serious injury. Always replace the crash zone sensor with a new part. The crash zone sensor cannot be bench-checked or self-checked.

SERVICE CAUTIONS

ADA813001046W02

Component Disassembly

- Disassembling and reassembling the components of the air bag system can render the system inoperative, which may result in serious injury or death in the event of an accident. Do not disassemble any air bag system components.

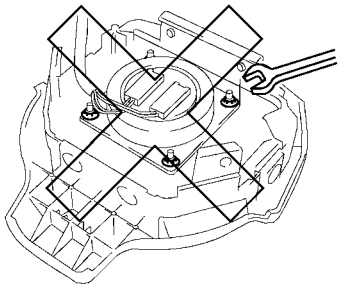

ADJ8130W004

Component Handling

- Oil, grease, water, etc on components may cause the air bag modules and pre-tensioner seat belts to fail to deploy in an accident, which may cause serious injury. Do not allow oil, grease, water, etc., on components.
- Inserting a screwdriver, etc., into the connector of an air bag module or a pre-tensioner seat belt may damage the connector and cause the air bag module or the pre-tensioner seat belt to deploy improperly, which may cause serious injury. Do not insert any foreign objects into the connector.

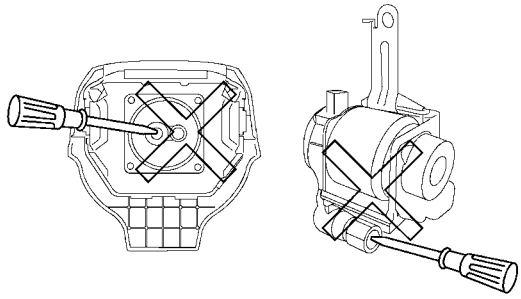

ADJ8130W005

Component Reuse

- Even if an air bag module or a pre-tensioner seat belt does not deploy in a collision and does not have any external signs of damage, it may have been damaged internally, which may cause improper operation. Improper operation may cause serious injury. Always self-check the undamaged air bag module or pre-tensioner seat belt to determine whether it can be reused.

Wiring Harness Repair

- Incorrectly repairing an air bag system wiring harness can accidentally deploy the air bag module or pre-tensioner seat belt, which can cause serious injury. If a problem is found in the system wiring, replace the wiring harness. Do not try to repair it.

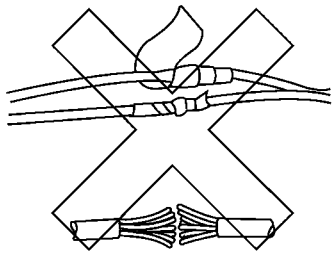

A6E8130W045

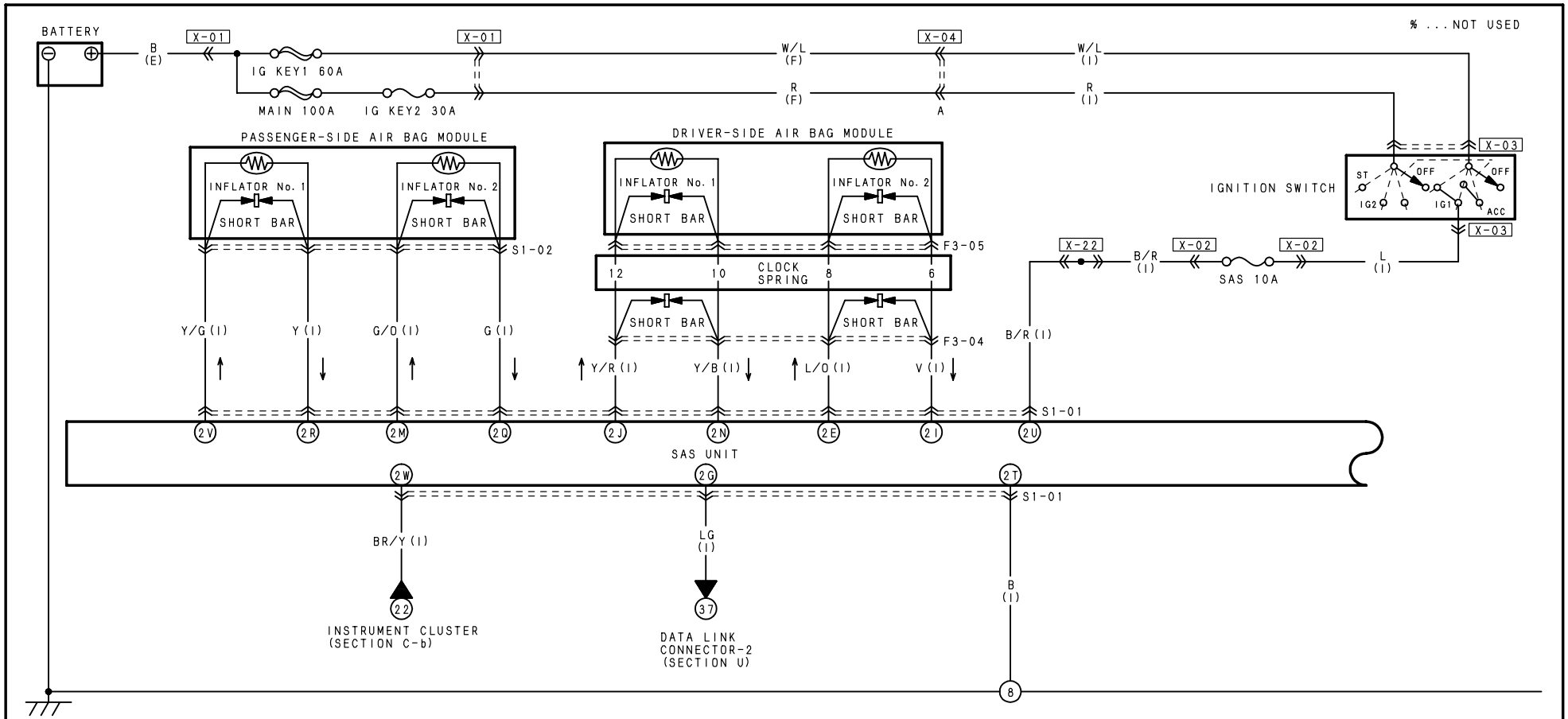

S1-01 SAS UNIT (I)

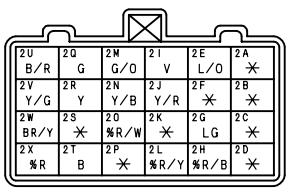

2U B/R	2Q G	2M G/O	2I V	2E L/O	2A ✳
2V Y/G	2R Y	2N Y/B	2J Y/R	2F ✳	2B ✳
2W BR/Y	2S ✳	2O %R/W	2K ✳	2G LG	2C ✳
2X %R	2T B	2P ✳	2L %R/Y	2H %R/B	2D ✳

S1-02 PASSENGER-SIDE AIR BAG MODULE (I)

F3-05 DRIVER-SIDE AIR BAG MODULE (CLOCK SPRING)

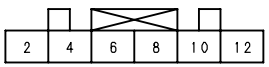

TERMINALS OF THIS CONNECTOR ARE INDICATED BY NUMBERS.

NOTE: THIS IS THE CONNECTOR AS SEEN FROM THE TERMINAL SIDE.

F3-04 INSTRUMENT PANEL (I)-CLOCK SPRING

(I)

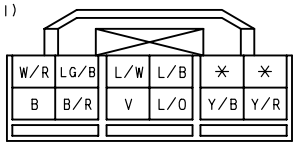

W/R	LG/B	L/W	L/B	✳	✳
B	B/R	V	L/O	Y/B	Y/R

(CLOCK SPRING)

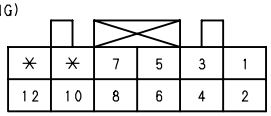

✳	✳	7	5	3	1
12	10	8	6	4	2

TERMINALS OF THIS CONNECTOR ARE INDICATED BY NUMBERS.

NOTE: THIS IS THE CONNECTOR AS SEEN FROM THE TERMINAL SIDE.

HARNESS SYMBOL: (F) (E) (R)

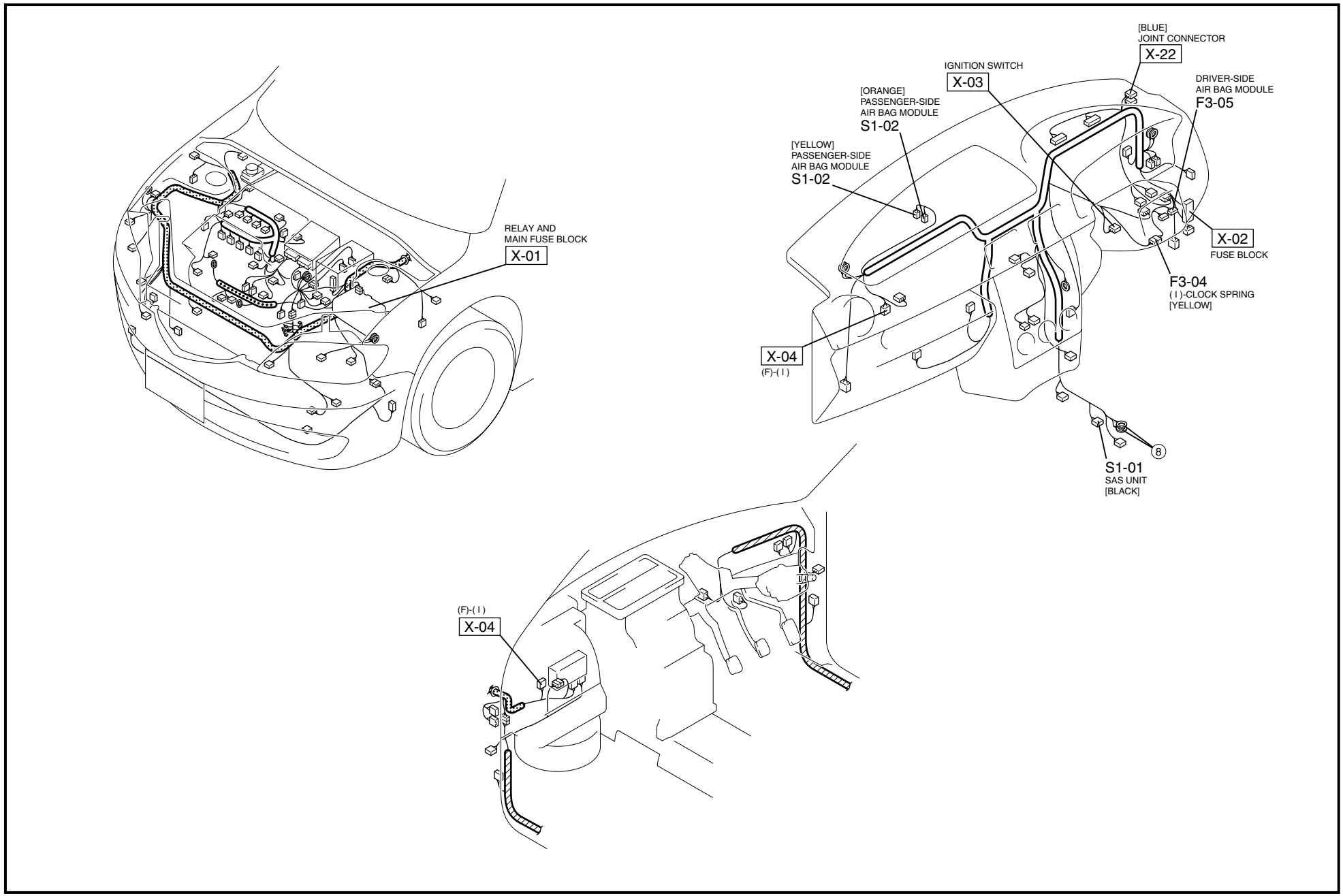

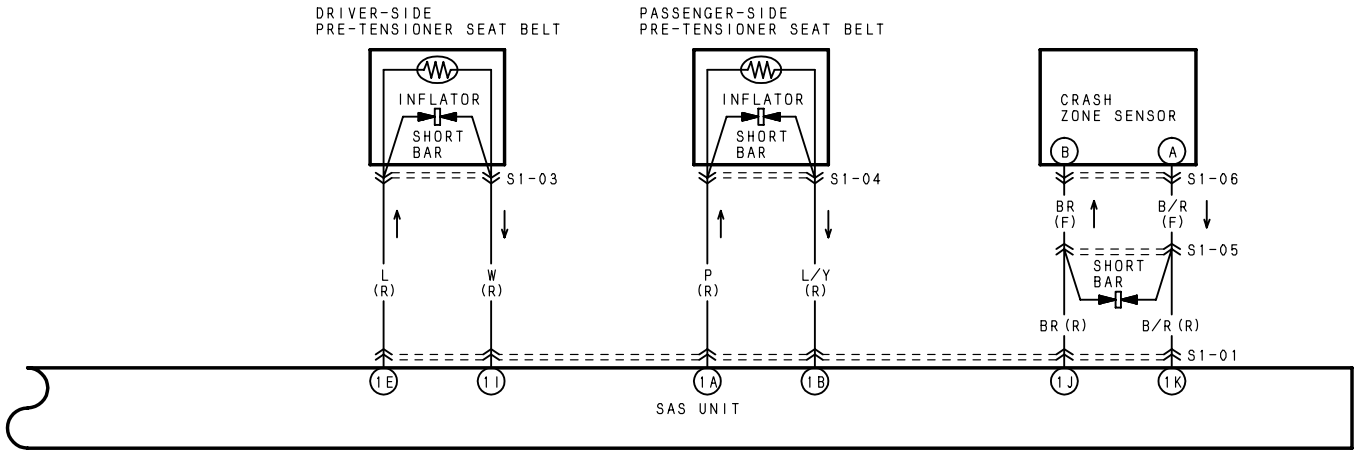

S1-01 SAS UNIT (R)

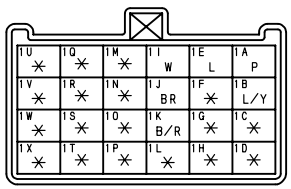

S1-03 DRIVER-SIDE PRE-TENSIONER SEAT BELT (R)

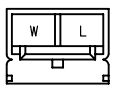

S1-04 PASSENGER-SIDE PRE-TENSIONER SEAT BELT (R)

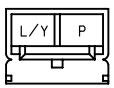

S1-05 FRONT (F) -REAR (R)

S1-06 CRASH ZONE SENSOR (F)

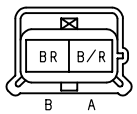

HARNESS SYMBOL: (F) (E) (R)

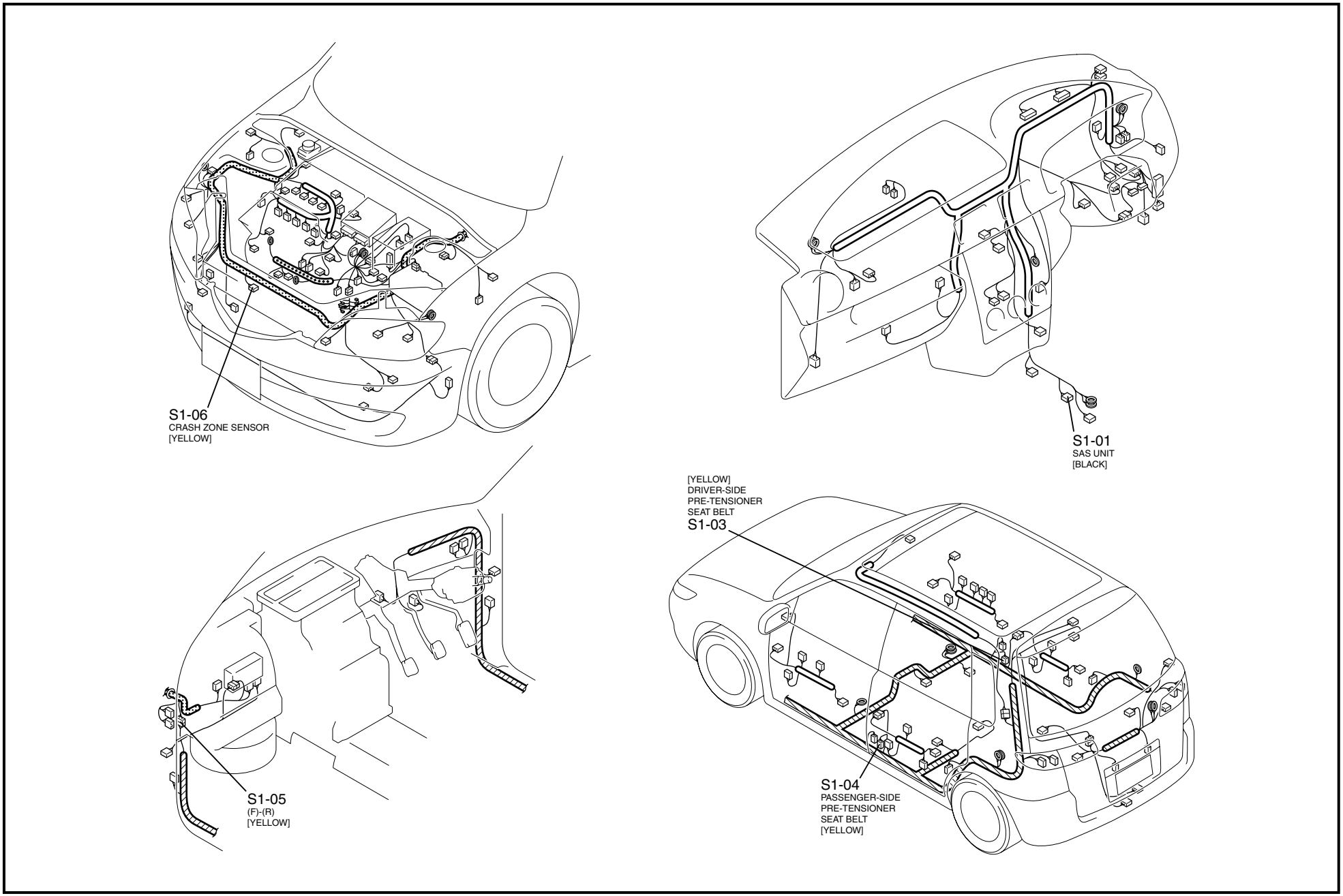

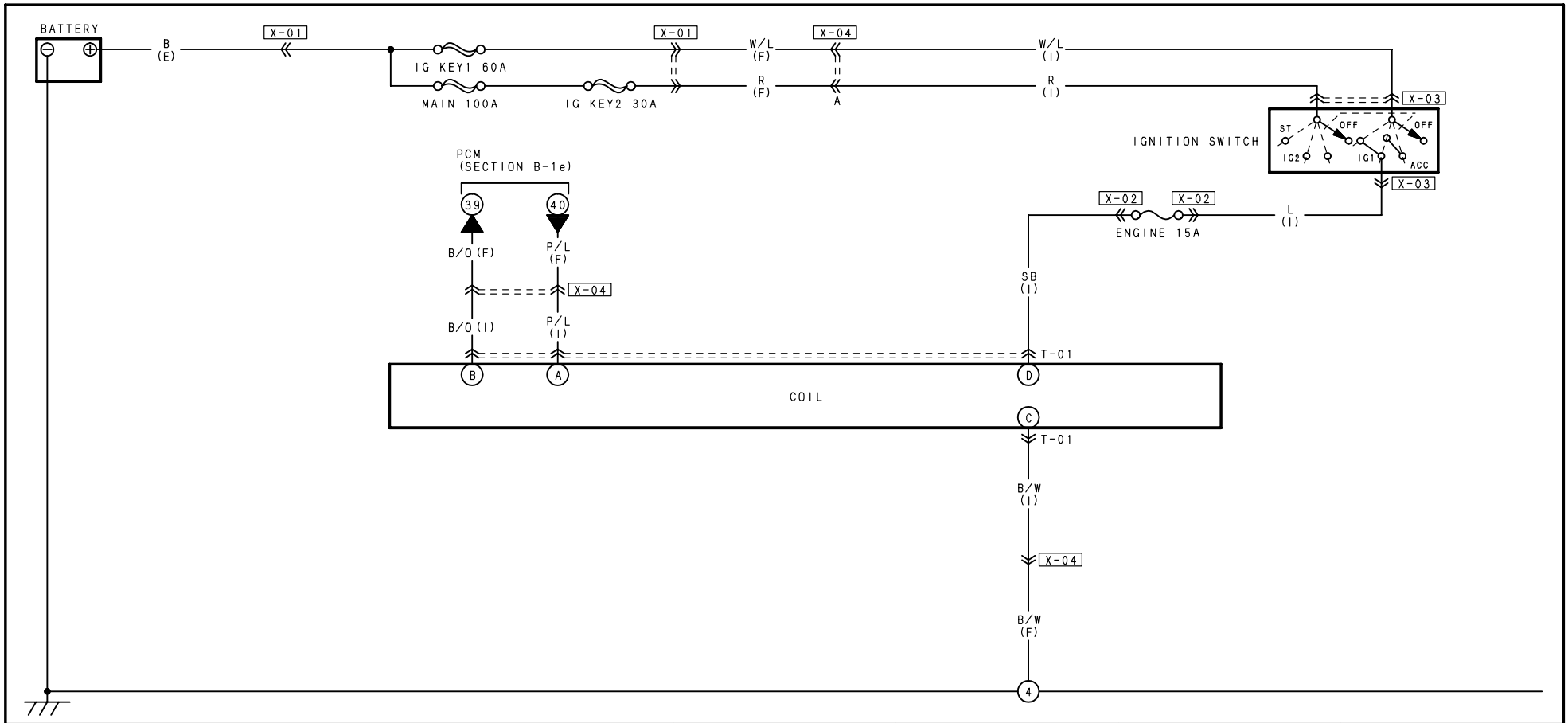
BATTERY
B (E)
X-01
IG KEY1 60A
MAIN 100A
IG KEY2 30A
X-01
W/L (F)
R (F)
X-04
A
W/L (I)
R (I)
X-03
IGNITION SWITCH
ST
OFF
OFF
IG2
IG1
ACC
X-03
PCM (SECTION B-1e)
39
40
B/O (F)
P/L (F)
X-04
B/O (I)
P/L (I)
X-02
X-02
ENGINE 15A
L (I)
SB (I)
T-01
B
A
D
COIL
C
T-01
B/W (I)
X-04
B/W (F)
4

T-01 COIL(I)

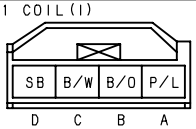
SB
B/W
B/O
P/L
D
C
B
A

HARNESS SYMBOL: (F) (E) (R)

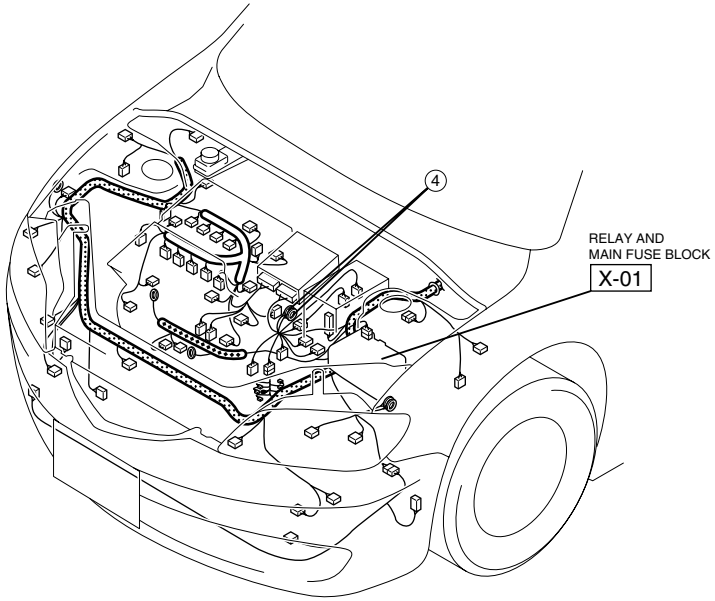

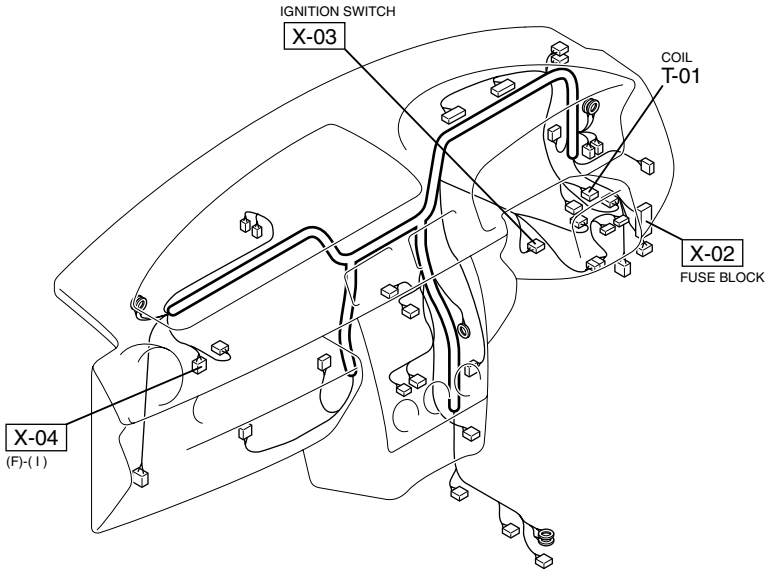

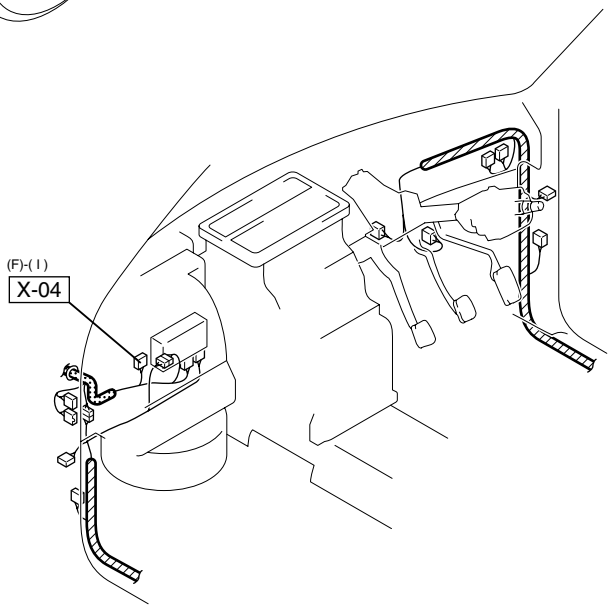

DATA LINK CONNECTOR

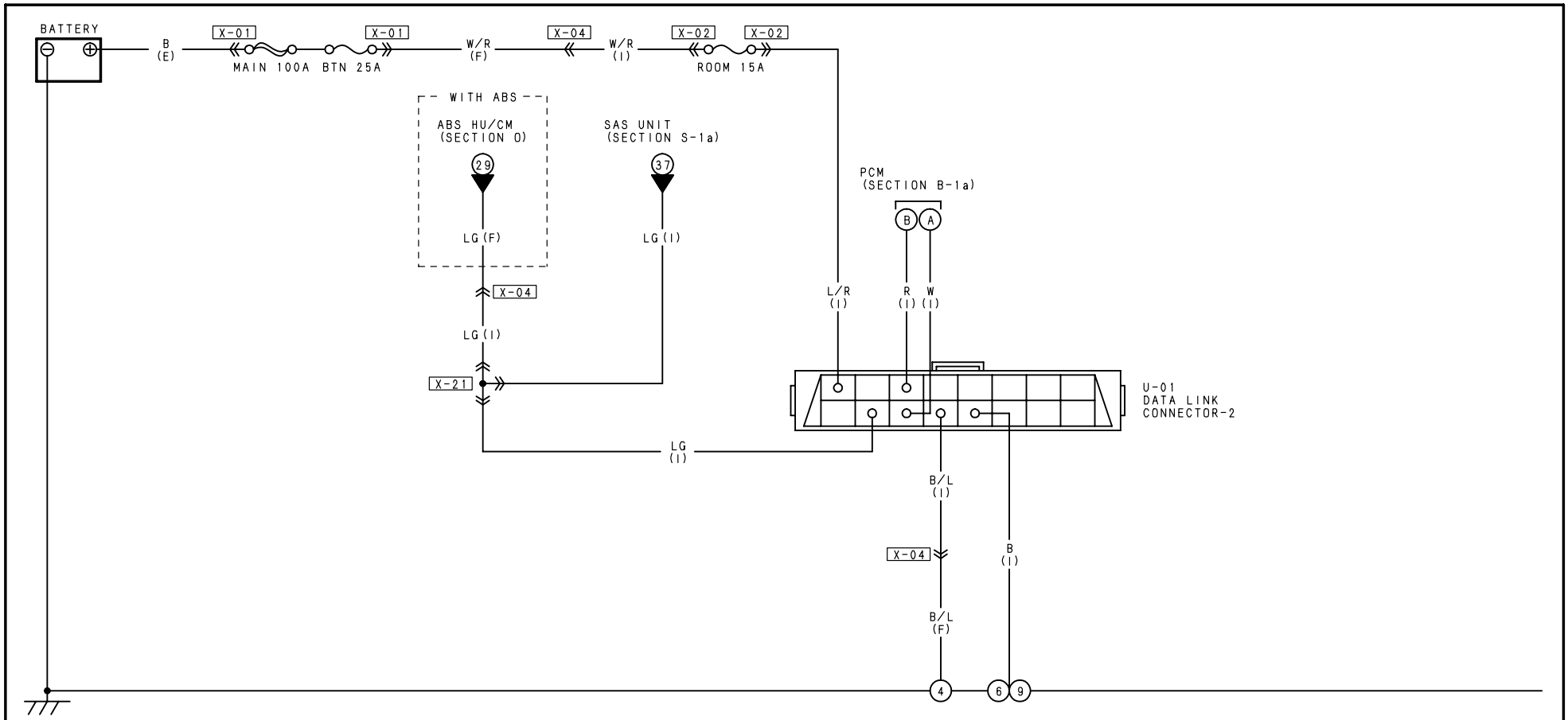

U-01 DATA LINK CONNECTOR-2 (I)

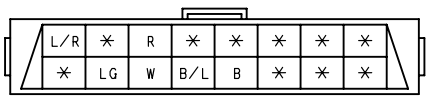

NOTE: THIS IS THE CONNECTOR AS SEEN FROM THE TERMINAL SIDE.

HARNESS SYMBOL: (F) (E) (R)

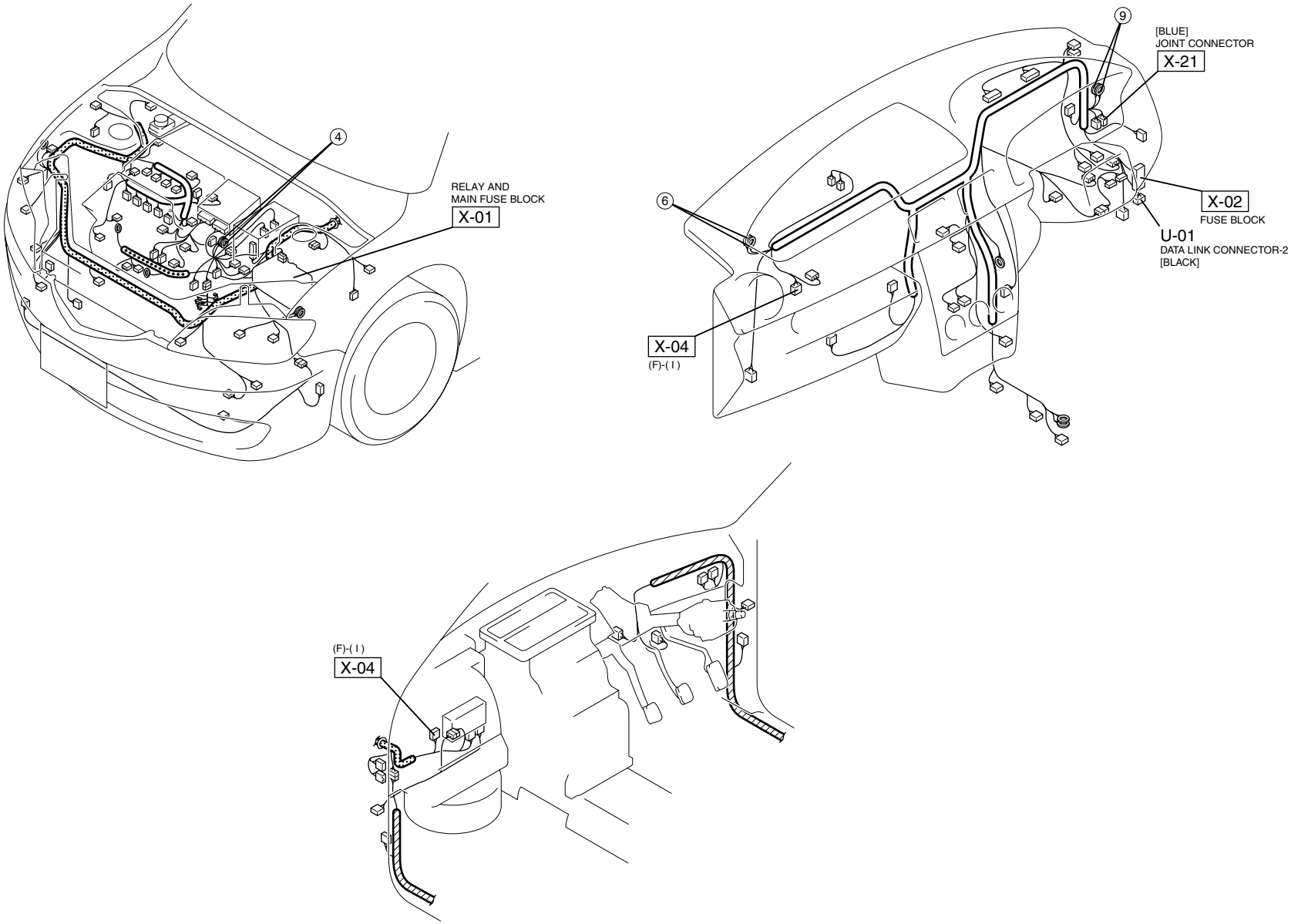

X-01 RELAY AND MAIN FUSE BLOCK

< >... ATX
... WITHOUT ABS
% ... NOT USED

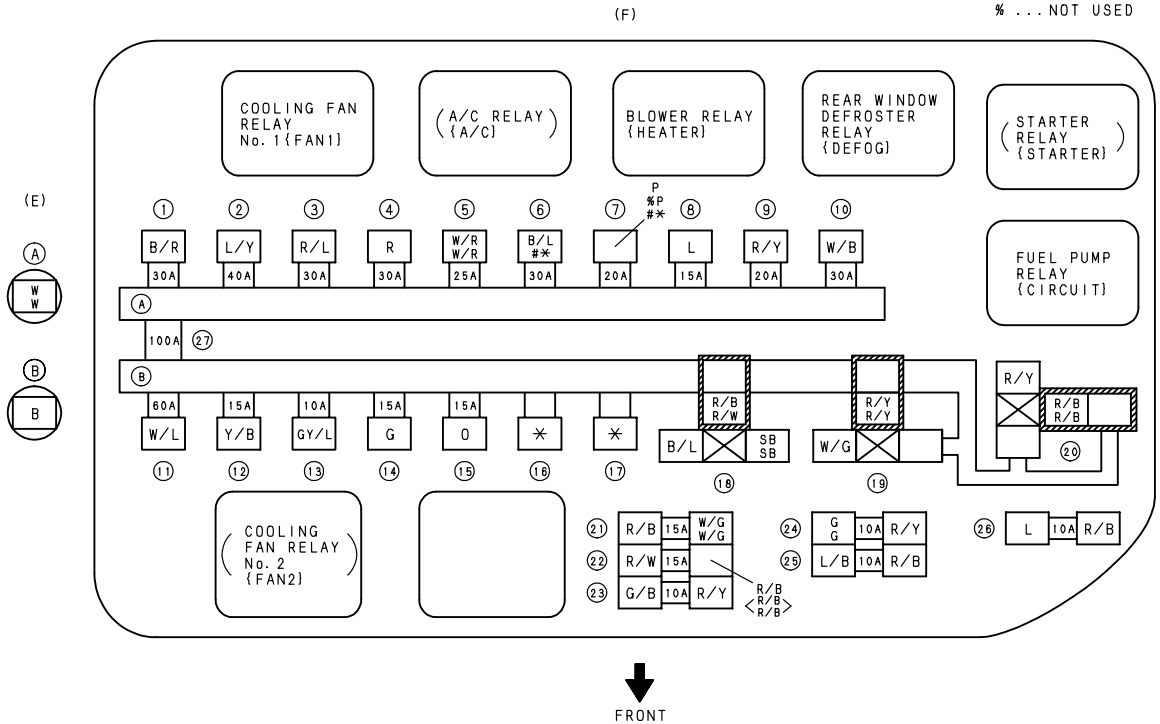

NOTE:THIS IS THE CONNECTOR AS SEEN FROM THE TERMINAL SIDE.

① FAN	⑪ IG KEY1	㉑ EGI INJ
② HEATER	⑫ FUEL PUMP	㉒ EGI COMP2
③ DEFOG	⑬ EGI COMP1	㉓ HEAD L HIGH
④ IG KEY2	⑭ STOP	㉔ HEAD R HIGH
⑤ BTN	⑮ HAZARD	㉕ HEAD L LOW
⑥ (ABS-P)	⑯ —	㉖ HEAD R LOW
⑦ (ABS-V)	⑰ —	㉗ MAIN
⑧ (FOG)	⑱ MAIN RELAY {MAIN}	
⑨ (P. WIND)	⑲ HEADLIGHT HIGH RELAY {HEAD HI}	
⑩ (DOOR LOCK)	⑳ HEADLIGHT LOW RELAY {HEAD LO}	

( ) EQUIPPED ONLY WITH THE RELATED SYSTEM
{ } CAUTION LABEL TITLE

X-02 FUSE BLOCK (I)

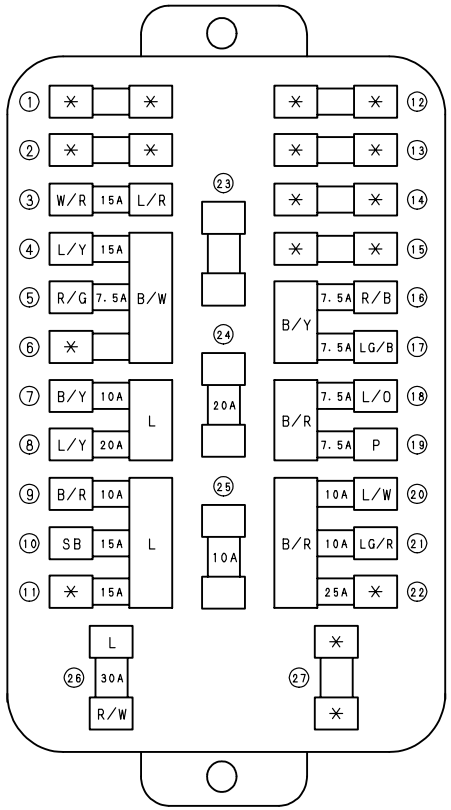

NOTE:THIS IS THE CONNECTOR AS SEEN FROM THE TERMINAL SIDE.

① —	⑪ A/T	㉑ BACK
② —	⑫ —	㉒ SUNROOF
③ ROOM	⑬ —	㉓ —
④ CIGAR	⑭ —	㉔ SPARE
⑤ MIRROR	⑮ —	㉕ SPARE
⑥ —	⑯ TAIL	㉖ P. WIND
⑦ METER	⑰ ILLUMI	㉗ —
⑧ WIPER	⑱ MAG. CLUCH	
⑨ SAS	⑲ A/C	
⑩ ENGINE	⑳ R. WIP	

COMMON CONNECTOR LIST

X-03 IGNITION SWITCH (I)

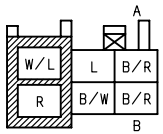

X-04 FRONT (F) - INSTRUMENT PANEL (I)

& ... ATX
@ ... WITH ABS
# ... WITH IMMOBILIZER SYSTEM
% ... NOT USED

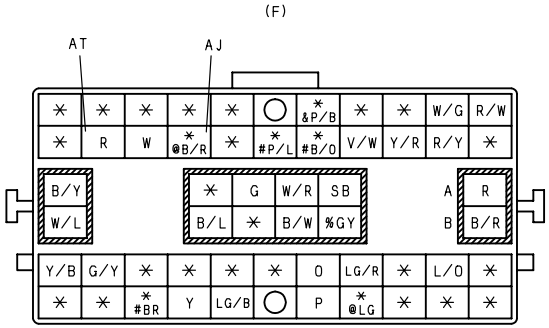

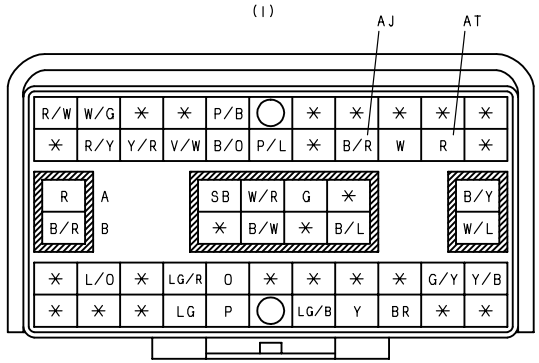

X-05 FRONT (F) - REAR (R)

... ATX
@ ... WITH ABS
% ... NOT USED

X-06 FRONT (F) - ENGINE (E)

..."WITHOUT IMMOBILIZER SYSTEM" MTX

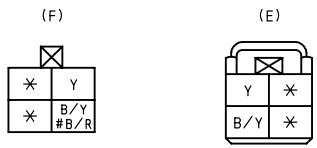

NOTE: THIS IS THE CONNECTOR AS SEEN FROM THE TERMINAL SIDE.

X-07 INSTRUMENT PANEL (I) - REAR (R)

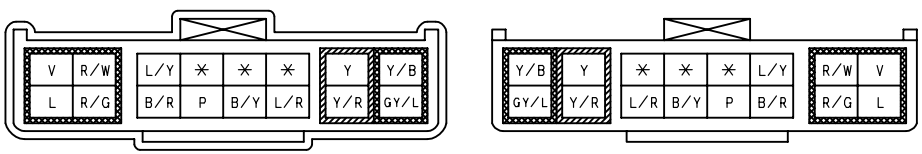

X-08 INSTRUMENT PANEL (I) - REAR (R)

% ... NOT USED

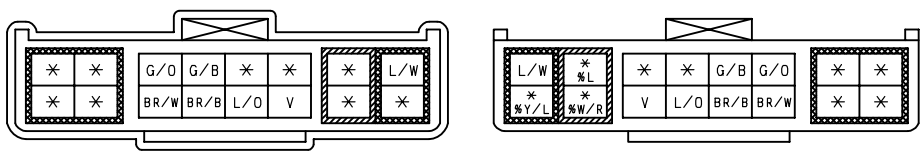

X-09 REAR(R)-REAR No. 2(R2)

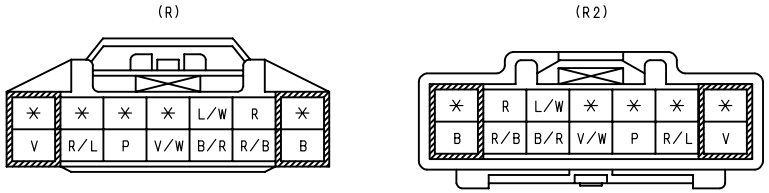

X-10 REAR(R)-INTERIOR LIGHT(IN)

...NOT USED

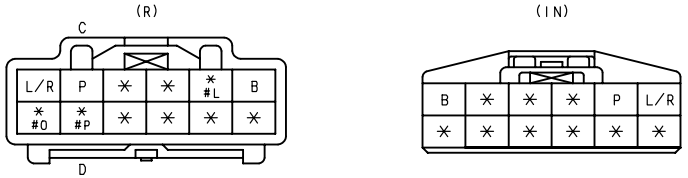

X-11 REAR(R)-DOOR NO. 1(DR1)

...WITH POWER WINDOW SYSTEM
@ ...NOT USED

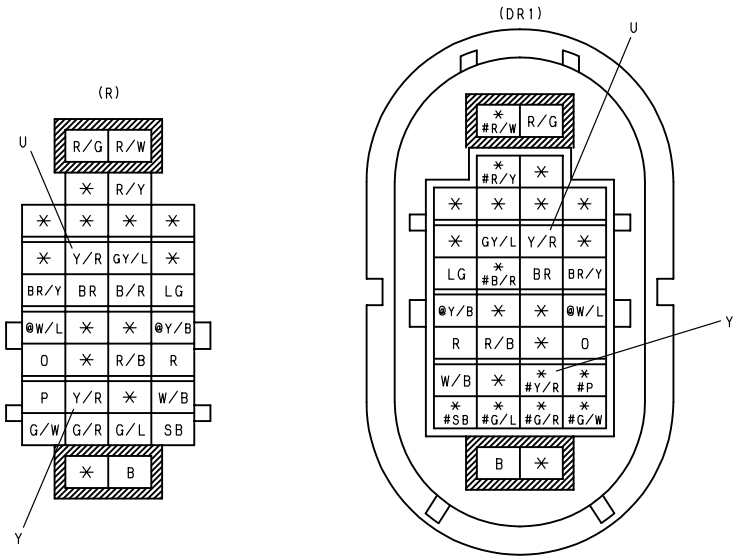

X-12 REAR(R)-DOOR NO. 2(DR2)

...WITH POWER WINDOW SYSTEM
@ ...NOT USED

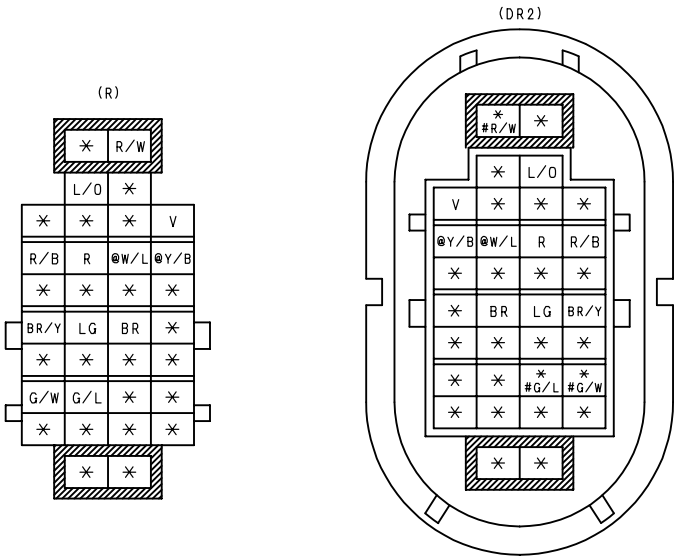

COMMON CONNECTOR LIST

X-13 REAR(R)-DOOR NO. 3(DR3)

...WITH POWER WINDOW SYSTEM

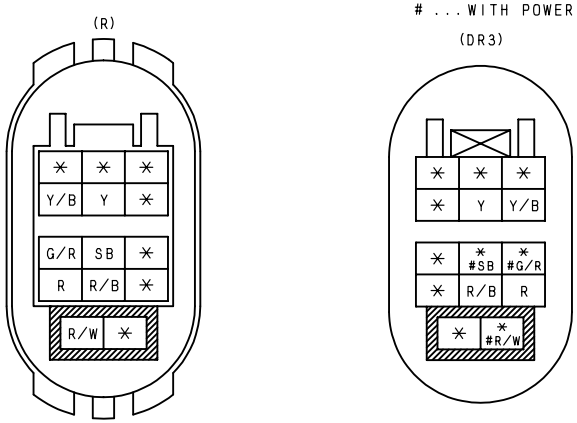

X-14 REAR(R)-DOOR NO. 4(DR4)

...WITH POWER WINDOW SYSTEM

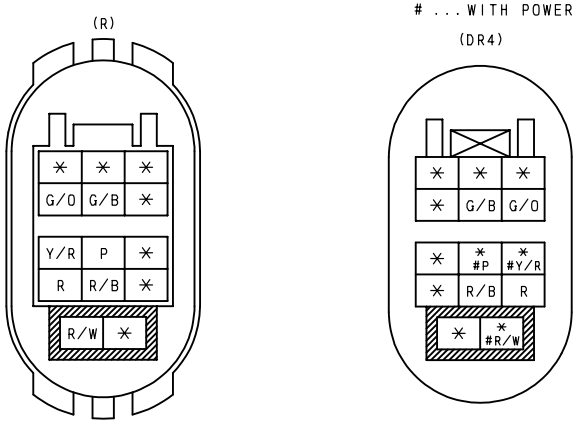

X-16 JOINT CONNECTOR(F)

...WITH ABS

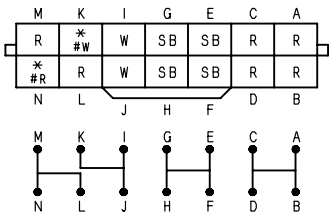

X-18 JOINT CONNECTOR(EM)

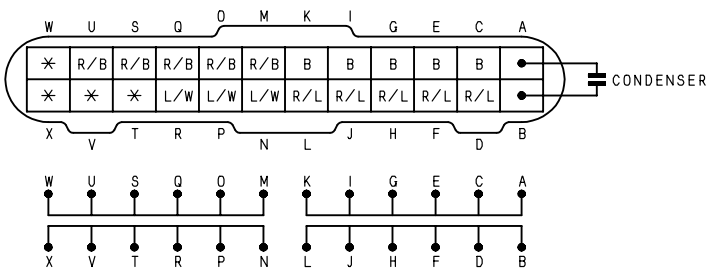

X-19 JOINT CONNECTOR(I)

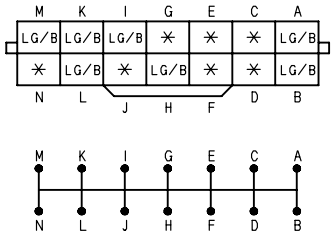

X-20 JOINT CONNECTOR(I)

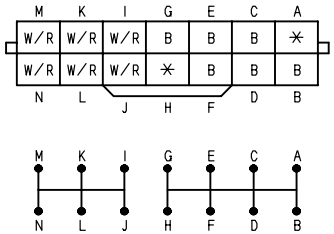

X-21 JOINT CONNECTOR(I)

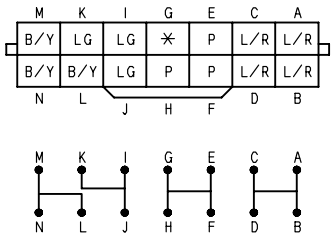

X-22 JOINT CONNECTOR(I)

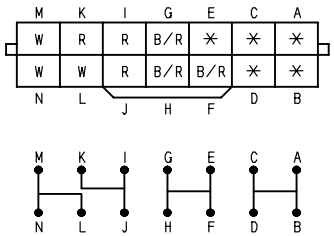

THIS PAGE INTENTIONALLY LEFT BLANK

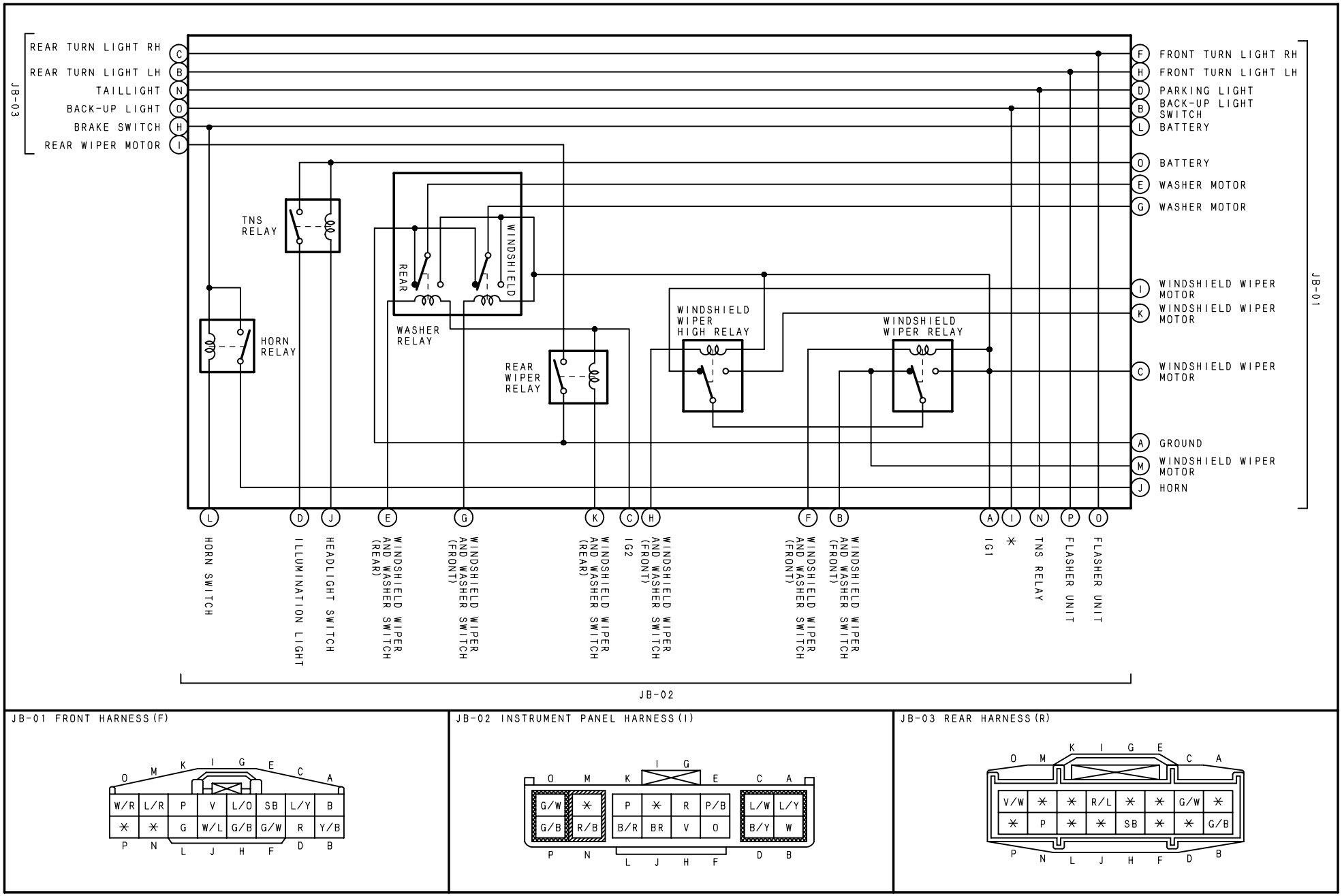

JB-01 FRONT HARNESS(F)

O	M	K	I	G	E	C	A
W/R	L/R	P	V	L/O	SB	L/Y	B
*	*	G	W/L	G/B	G/W	R	Y/B
P	N	L	J	H	F	D	B

JB-02 INSTRUMENT PANEL HARNESS(I)

O	M	K	I	G	E	C	A
G/W	*	P	*	R	P/B	L/W	L/Y
G/B	R/B	B/R	BR	V	O	B/Y	W
P	N	L	J	H	F	D	B

JB-03 REAR HARNESS(R)

O	M	K	I	G	E	C	A
V/W	*	*	R/L	*	*	G/W	*
*	P	*	*	SB	*	*	G/B
P	N	L	J	H	F	D	B

PARTS INDEX

A

A/C RELAY 58
ABS HU/CM 76
AUDIO CONTROL SWITCH 66
AUDIO UNIT 66

B

BACK-UP LIGHT 52
BACK-UP LIGHT SWITCH 52
BLOWER MOTOR 56
BLOWER RELAY 56
BRAKE FLUID LEVEL SENSOR 36
BRAKE LIGHT 54
BRAKE SWITCH 54
BUCKLE SWITCH 36

C

CAMSHAFT POSITION SENSOR 24
CARGO COMPARTMENT LIGHT 64
CARGO COMPARTMENT LIGHT SWITCH 40
CENTER PANEL 56
CIGARETTE LIGHTER 60
CLIMATE CONTROL UNIT 56
CLUTCH SWITCH 20
COIL 84
COOLING FAN MOTOR 32
COOLING FAN RELAY 32
CRANKSHAFT POSITION SENSOR 24
CRASH ZONE SENSOR 82

D

DATA LINK CONNECTOR 86
DOOR LOCK TIMER UNIT 70, 72
DOOR LOCK-LINK SWITCH 70
DOOR SWITCH 40
DRIVER-SIDE AIR BAG MODULE 80
DRIVER-SIDE
PRE-TENSIONER SEAT BELT 82

E

ENGINE COOLANT
TEMPERATURE SENSOR 24
EVAPORATOR
TEMPERATURE SENSOR 56

F

FILAMENT 60
FLASHER UNIT 50
FRONT DOOR LOCK ACTUATOR 72
FRONT DOOR SPEAKER 66
FRONT FOG LIGHT 46
FRONT FOG LIGHT RELAY 46
FRONT FOG LIGHT SWITCH 46
FRONT POWER WINDOW MOTOR 68
FRONT SIDE TURN LIGHT 50
FRONT TURN LIGHT 50
FUEL INJECTOR 22
FUEL PUMP RELAY 30
FUEL PUMP UNIT 30

G

GENERATOR 18

H

HAZARD WARNING SWITCH 50
HEADLIGHT 44
HEADLIGHT SWITCH 44
HEATED OXYGEN SENSOR 24
HIGH-MOUNT BRAKE LIGHT 54
HOLD SWITCH 28
HORN 54
HORN SWITCH 54

I

IDLE AIR CONTROL VALVE 22
IGNITION COIL 22
ILLUMINATION
AUDIO CONTROL SWITCH 62
AUDIO UNIT 62
FAN SWITCH 62
INSTRUMENT CLUSTER 62
SELECTOR 62
INPUT/TURBINE SPEED SENSOR 28
INSTRUMENT CLUSTER 34, 36, 38, 40
INTERIOR LIGHT 64

K

KEY REMINDER SWITCH 34
KNOCK SENSOR 24

L

LICENSE PLATE LIGHT 48
LIFTGATE LOCK ACTUATOR 72

M

MAGNETIC CLUTCH 58
MASS AIR FLOW/INTAKE AIR
TEMPERATURE SENSOR 24

N

NEUTRAL SWITCH 20

O

OIL CONTROL VALVE 24
OIL PRESSURE SWITCH 36

P

PANEL LIGHT CONTROL SWITCH 62
PARKING BRAKE SWITCH 40
PARKING LIGHT 48
PASSENGER-SIDE AIR BAG MODULE 80
PASSENGER-SIDE
PRE-TENSIONER SEAT BELT 82
PCM 20, 22, 24, 26, 28
POWER OUTSIDE MIRROR 74
POWER OUTSIDE MIRROR SWITCH 74
POWER STEERING PRESSURE SWITCH 24
POWER WINDOW MAIN SWITCH 68
POWER WINDOW SUBSWITCH 68
PRESSURE CONTROL SOLENOID 26
PURGE SOLENOID VALVE 24

R

REAR DOOR LOCK ACTUATOR 72
REAR DOOR SPEAKER 66
REAR POWER WINDOW MOTOR 68
REAR TURN LIGHT 50
REAR WHEEL-SPEED SENSOR 76
REAR WINDOW DEFROSTER RELAY 60
REAR WIPER MOTOR 42
REFRIGERANT PRESSURE SWITCH 56
RESISTOR 56

PARTS INDEX

S

SAS UNIT 80, 82
SHIFT SOLENOID 26
STARTER 18
STARTER RELAY 18

T

TAILLIGHT 48
THROTTLE POSITION SENSOR 24
TRANSAXLE RANGE SWITCH 18, 26, 52
TURN SWITCH 50

V

VARIABLE TUMBLE CONTROL SYSTEM
SHUTTER VALVE ACTUATOR 22
VEHICLE SPEED SENSOR 20
VARIABLE INTAKE-AIR SYSTEM
SHUTTER VALVE ACTUATOR 22

W

WASHER MOTOR 42
WHEEL-SPEED SENSOR 76
WINDSHIELD WIPER
AND WASHER SWITCH 42
WINDSHIELD WIPER MOTOR 42