WARNING

Servicing a vehicle can be dangerous. If you have not received service-related training, the risks of injury, property damage, and failure of servicing increase. The recommended servicing procedures for the vehicle in this workshop manual were developed with Mazda-trained technicians in mind. This manual may be useful to non-Mazda trained technicians, but a technician with our service-related training and experience will be at less risk when performing service operations. However, all users of this manual are excepted at least to know general safety procedures.

This manual contains “Warnings” and “Cautions” applicable to risks not normally encountered in a general technician’s experience. They should be followed to reduce the risk of injury and the risk that improper service or repair may damage the vehicle or render it unsafe. It is also important to understand that the “Warnings” and “Cautions” are not exhaustive. It is impossible to warn of all the hazardous consequences that might result from failure to follow the procedures.

The procedures recommended and described in this manual are effective methods of performing service and repair. Some require tools specifically designed for a specific purpose. Persons using procedures and tools which are not recommended by Mazda Motor Corporation must satisfy themselves thoroughly that neither personal safety nor safety of the vehicle will be jeopardized.

The contents of this manual, including drawings and specifications, are the latest available at the time of printing, and Mazda Motor Corporation reserves the right to change the vehicle designs and alter the contents of this manual without notice and without incurring obligation.

Parts should be replaced with genuine Mazda replacement parts or with parts which match the quality of genuine Mazda replacement parts. Persons using replacement parts of lesser quality than that of genuine Mazda replacement parts must satisfy themselves thoroughly that neither personal safety nor safety of the vehicle will be jeopardized.

Mazda Motor Corporation is not responsible for any problems which may arise from the use of this manual. The cause of such problems includes but is not limited to insufficient service-related training, use of improper tools, use of replacement parts of lesser quality than that of genuine Mazda replacement parts, or not being aware of any revision of this manual.

Mazda3

Wiring Diagram

FOREWORD

This wiring diagram incorporates the wiring schematics of the basic vehicle and available optional equipment. Actual vehicle wiring may vary slightly depending on optional equipment or local specifications, or both. All information in this manual is based on information available at the time of printing. Mazda Motor Corporation reserves the right to make changes without previous notice.

Mazda Motor Corporation
HIROSHIMA, JAPAN

APPLICATION:
This manual applies to vehicles beginning with the Vehicle Identification Numbers (VIN) on the following page.

CONTENTS

TITLE	SECTION		
		PREVIOUS	NEW
GENERAL INFORMATION		GI (GENERAL INFORMATION)	00
		W (ELECTRICAL WIRING SCHEMATIC)	
		FB (FUSE BLOCK)	
		JB (JOINT BOX)	
		X (COMMON CONNECTOR)	
		Y (GROUND POINT)	
	SYSTEM CIRCUIT DIAGRAM/CONNECTOR LOCATIONS	U (DATA LINK CONNECTOR)	
ENGINE		A (CHARGING SYSTEM/ STARTING SYSTEM)	01
		B (ENGINE CONTROL SYSTEM)	
		Q (CRUISE CONTROL SYSTEM)	
SUSPENSION		—	02
DRIVELINE/AXLE		—	03
BRAKES		O (ANTI-LOCK BRAKE SYSTEM)	04
TRANSMISSION/ TRANSAXLE		H (EC-AT CONTROL SYSTEM)	05
STEERING		N (ELECTRIC POWER STEERING SYSTEM)	06
HEATER, VENTILATION & AIR CONDITIONING (HVAC)		G (AIR CONDITIONING SYSTEM)	07
RESTRAINTS		S (SEAT BELT/AIR BAG SYSTEM)	08
BODY & ACCESSORIES		C (GAUGE CONTROL SYSTEM)	09
		D (WIPER SYSTEM)	
		E (EXTERIOR LIGHTING SYSTEM)	
		F (SIGNAL SYSTEM)	
		I (INTERIOR LIGHTING SYSTEM)	
		J (AUDIO SYSTEM)	
		K (DOOR/WINDOW SYSTEM)	
		L (MIRROR SYSTEM)	
		M (SUNROOF SYSTEM)	
		P (POWER SEAT SYSTEM)	
		T (SECURITY AND LOCKS SYSTEM/OPTION)	
ALPHABETICAL INDEX		AI (ALPHABETICAL INDEX)	AI

©2003 Mazda Motor Corporation
PRINTED IN AUSTRALIA. NOVEMBER 2003
5593-1A-03K

VEHICLE IDENTIFICATION NUMBERS (VIN)
(CHASSIS NUMBER)

JM0 BK103100 100001–
JM0 BK10F100 100001–
JM6 BK106100 100001–
JM6 BK10Y100 100001–

SYSTEM INDEX

00 GENERAL INFORMATION

R READING WIRING DIAGRAMS
CONTENTS OF WIRING DIAGRAMS 4
GROUND POINTS 5
SYSTEM CIRCUIT DIAGRAM/ CONNECTOR DIAGRAM 6
ROUTING DIAGRAM 8
HARNESS SYMBOLS 9
WIRING COLOR CODE 9
SYMBOLS 10
ABBREVIATIONS USED IN THIS MANUAL 12
P ELECTRICAL SYSTEM GENERAL PROCEDURES 14

POWER, GROUND & COMMON CONNECTOR

E ELECTRICAL WIRING SCHEMATIC 18
F FUSE BOX 20
J PASSENGER JUNCTION BOX (PJB) 22
C COMMON CONNECTOR LIST 26
G GROUND POINT 30

DATA LINK CONNECTOR

D DATA LINK CONNECTOR 32

01 ENGINE

12 COOLING SYSTEM 34
14 FUEL SYSTEM 36
17 CHARGING SYSTEM 38
19 STARTING SYSTEM
ATX 40
MTX 42
40 CONTROL SYSTEM
Z6/ZY:INCLUDES AUTOMATIC TRANSAXLE CONTROL INFORMATION 44
LF/L3:INCLUDES AUTOMATIC TRANSAXLE CONTROL INFORMATION 60

04 BRAKES

13 ANTILOCK BRAKE SYSTEM 74
15 DYNAMIC STABILITY CONTROL (DSC) SYSTEM 76

05 TRANSMISSION/TRANSAXLE

18 AUTOMATIC TRANSAXLE SHIFT MECHANISM
KEY INTERLOCK SYSTEM 80
SHIFT-LOCK SYSTEM 80

06 STEERING

14 POWER STEERING
ELECTRO HYDRAULIC POWER ASSIST STEERING (EHPAS) SYSTEM 82

07 HEATER, VENTILATION & AIR CONDITIONING (HVAC)

40 CONTROL SYSTEM
HEATER AND FULL-AUTO AIR CONDITIONER SYSTEM 84
HEATER AND MANUAL AIR CONDITIONER SYSTEM 88
A/C COMPRESSOR CONTROL 92

08 RESTRAINTS

10 AIR BAG SYSTEM
AIR BAG SYSTEM SERVICE CAUTIONS/ SERVICE WARNINGS 94
AIR BAG SYSTEM (INCLUDES PRE-TENSIONER SEAT BELT INFORMATION) 96

09 BODY & ACCESSORIES

12 GLASS/WINDOWS/MIRRORS
REAR WINDOW DEFROSTER 104
POWER WINDOW SYSTEM 106
POWER OUTER MIRROR 110
RETRACTABLE OUTER MIRROR 110
14 SECURITY AND LOCKS
POWER DOOR LOCK SYSTEM
WITHOUT DOUBLE LOCKING SYSTEM 112
WITH DOUBLE LOCKING SYSTEM 116
IMMOBILIZER SYSTEM 120
15 SUNROOF 122
18 LIGHTING SYSTEMS
HEADLIGHT 124
LICENSE PLATE LIGHT 128
PARKING LIGHT 128
TAILLIGHT 128
FRONT FOG LIGHT 130
TURN AND HAZARD WARNING LIGHT 132
BACK-UP LIGHT 134
BRAKE LIGHT 136
HIGH-MOUNT BRAKE LIGHT 136
INTERIOR LIGHT 138
MAP LIGHT 138
CARGO COMPARTMENT LIGHT (5HB) 140
TRUNK COMPARTMENT LIGHT (4SD) 140
ILLUMINATION LIGHT 142
HEADLIGHT MANUAL LEVELING SYSTEM 148
19 WIPER/WASHER SYSTEM
WINDSHIELD WIPER AND WASHER 150
REAR WIPER AND WASHER 154
20 ENTERTAINMENT
CIGARETTE LIGHTER 156
AUDIO SYSTEM 158
AUDIO SYSTEM (BOSE TYPE AUDIO) 160-2
22 INSTRUMENTATION/DRIVER INFO.
INSTRUMENT CLUSTER 162
HORN 170
INFORMATION DISPLAY 170-2

AI ALPHABETICAL INDEX

ALPHABETICAL INDEX 172

Two digits (section ID) indicated in front of each title are commonly used with the Workshop Manual.

Contents of wiring diagrams

- This manual comprises the sections shown below.

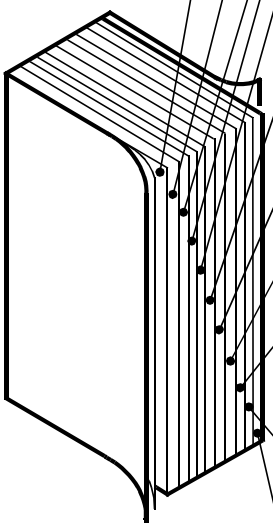

NEW					PREVIOUS	
GENERAL INFORMATION	00	R	Reading wiring diagrams	A how-to on using and reading wiring diagrams, using test equipment, checking harness and connectors, and finding trouble spots	GI	General information of wiring diagrams
		P	Electrical system general procedures			
		E	Electrical wiring schematic	Shows main fuses and other fuses for each system	W	Electrical wiring schematic
		F	Fuse box complete wiring system	Shows internal circuits and connectors	FB	Fuse block complete wiring system
		J	Joint box/Junction box complete wiring system		JB	Joint box complete wiring system
		C	Common connector list	Shows connectors common throughout system	X	Common connector list
		G	Ground point	Ground routes from and to the battery	Y	Ground point
		D	Data link connector	Shows circuit and connector diagrams and component and connector location diagrams	U	Data link connector
ENGINE	01	12	Cooling system		A	Charging system/Starting system
		14	Fuel system			
		17	Charging system		B	Engine control system
		18	Ignition system		C	Gauge control system
		19	Starting system		D	Wiper system
		20	Cruise control system		E	Lighting system
		40	Control system		F	Signal system
SUSPENSION	02	12	Wheel and tires		G	Air-conditioning system
DRIVELINE/AXLE	03	18	4-Wheel drive			
BRAKES	04	13	Antilock brake system		H	Transmission control/Key interlock/Shift-lock system
		14	Traction control system			
		15	Dynamic stability control		I	Interior light system
TRANSMISSION/ TRANSAXLE	05	13	Automatic transmission		J	Audio/Radio system
		14	Automatic transmission shift mechanism			
		17	Automatic transaxle		K	Power window/Power door lock system
		18	Automatic transaxle shift mechanism			
STEERING	06	13	Electric power steering (EPS)			
		14	Power steering			
HEATER, VENTILATION & AIR CONDITIONING (HVAC)	07	40	Control system		L	Remote control mirror system
RESTRAINTS	08	10	Air bag system			
		11	Seat belt		M	Sliding sunroof system
BODY & ACCESSORIES	09	12	Glass/Windows/Mirrors		O	Anti-lock brake system
		13	Seats		N	Electric power steering (EPS)
		14	Security and locks			
		15	Sunroof		P	Power seat/Seat warmer system
		18	Lighting systems			
		19	Wiper/Washer system		Q	Auto cruise control system
		20	Entertainment		S	Air bag system
		22	Instrumentation/Driver info.		T	Others
AI			Alphabetical Index	Gives page number of circuit diagram for each component	AI	Alphabetical Index

Depending on the vehicle model, the actual sections may be different.

Ground points

- This shows ground points of the harness.

GROUND POINTS (4SD)

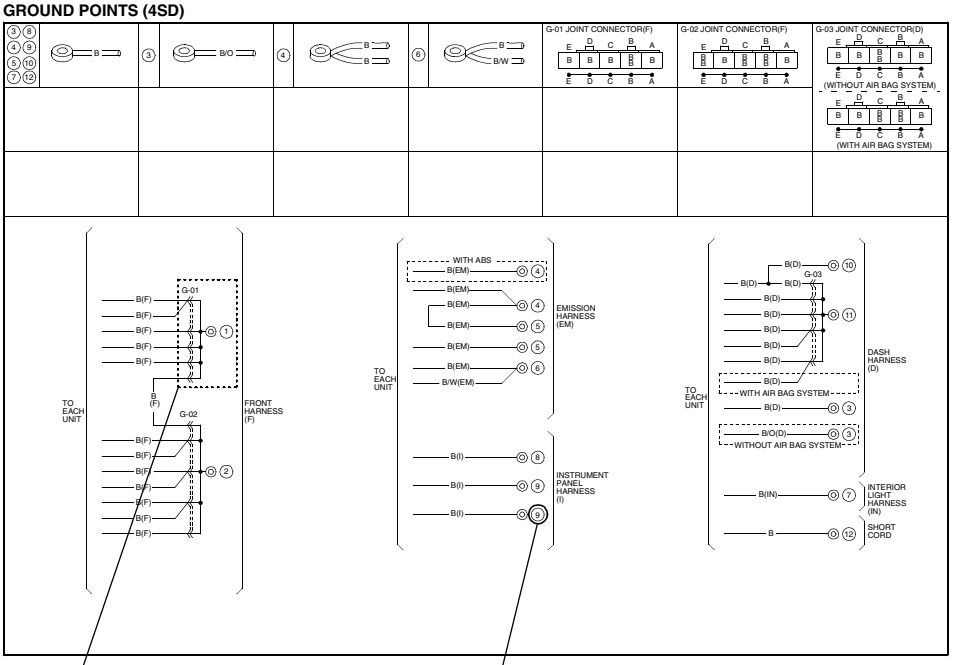

Ground indication

On vehide	Indication
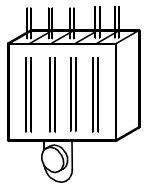	To circuit 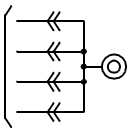

On circuit diagrams and ground points

The ground connection numbers in system circuit diagrams correspond to those in the ground point diagram.

CONTROL SYSTEM

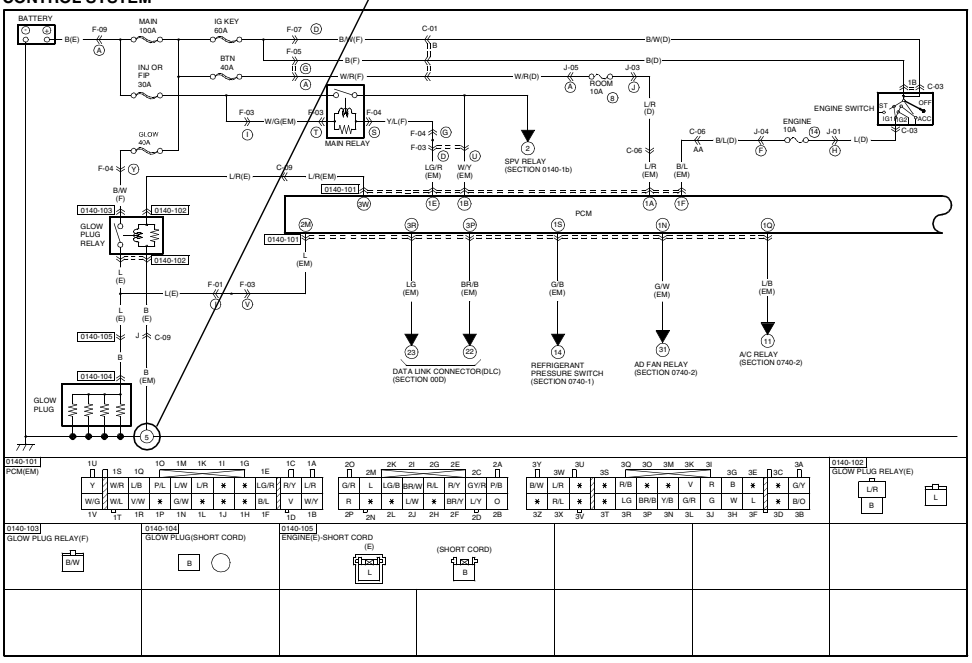

System circuit diagram/connector diagram

- These diagrams show the circuits for each system, from the power supply to the ground. The power supply side is on the upper part of the page, the ground side on the lower part. The diagrams describe circuits with the ignition switch off.
  Below is an explanation of the various points in the diagram.

System name

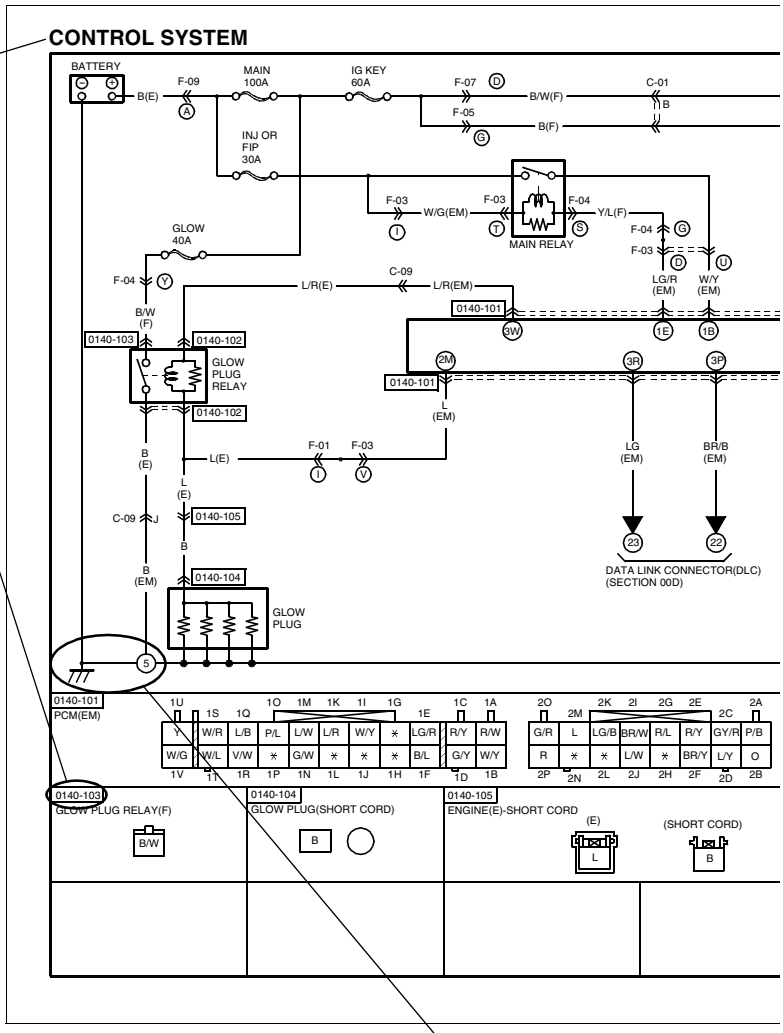

Connector code

The prefix letter indicates the system in which the connector is used.

- **F**: Fuse box connectors
- **J**: Joint box/Junction box connectors
- **C**: Common connectors
- **G**: Ground point connectors
- **D**: Data link connector
- **0112**: Cooling system connectors
- **0114**: Fuel system connectors
- **0117**: Charging system connectors
- **0118**: Ignition system connectors
- **0119**: Starting system connectors
- **0120**: Cruise control system connectors
- **0140**: Engine control system connectors
- **0212**: Wheel and tires connectors
- **0318**: 4-Wheel drive connectors
- **0413**: Antilock brake system connectors
- **0414**: Traction control system connectors
- **0415**: Dynamic stability control connectors
- **0513**: Automatic transmission connectors
- **0514**: Automatic transmission shift mechanism connectors
- **0517**: Automatic transaxle connectors
- **0518**: Automatic transaxle shift mechanism connectors
- **0613**: Electric power steering (EPS) connectors
- **0614**: Power steering connectors
- **0740**: Heater, ventilation & air conditioning (HVAC) control system connectors
- **0810**: Air bag system connectors
- **0811**: Seat belt connectors
- **0912**: Glass/Windows/Mirrors connectors
- **0913**: Seats connectors
- **0914**: Security and locks connectors
- **0915**: Sunroof connectors
- **0918**: Lighting systems connectors
- **0919**: Wiper/Washer system connectors
- **0920**: Entertainment connectors
- **0922**: Instrumentation/Driver info. Connectors

Ground numbers

A harness ground is represented differently than a unit ground.

Types of grounds	Symbol
Harness 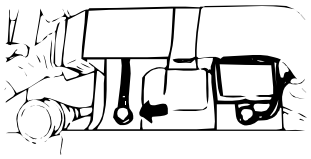	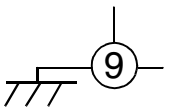
Unit 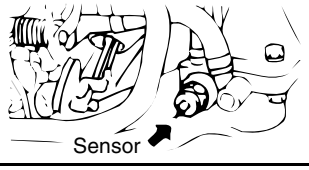	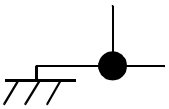

The number indicates that the circuit continues to the related system diagram.

System code

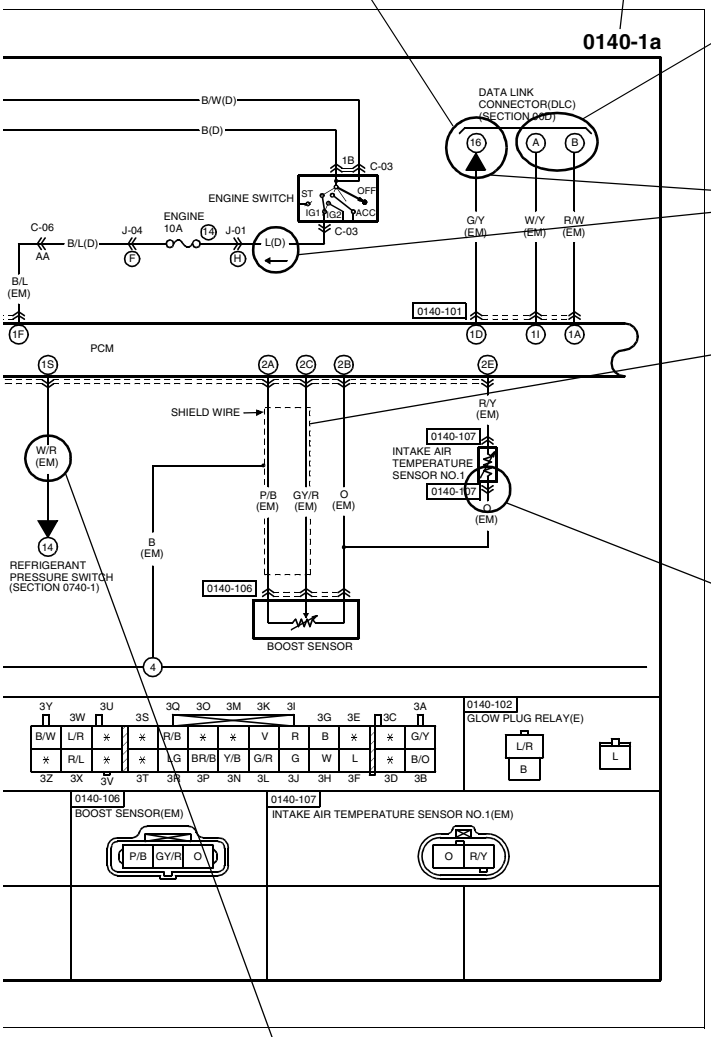

Multiplex communication

Indicates communication with connected parts. Signals are transmitted back and forth between connected parts.

Current symbol

Current flows in the direction of the arrow.

Indicates shielded wire.*

* Shielded wire :
Prevents signal disturbances from electrical interference.
Wire is covered by a metal meshing for grounding.

Wire color code (harness symbol)

- Two-color wires are indicated by a two-letter symbol.The first indicates the base color of the wire, the second the color of the stripe.
  For example:

  W/R is a white wire with a red strip
  BR/Y is a brown wire with a yellow strip

Symbol
(Example)

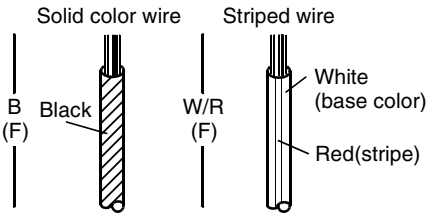

- The harness symbol is in ( ) following the harness symbols (refer to P-9.).

Connector symbols

- Male and female connectors are represented as follows in the circuit and connector diagrams.

		Circuit diagram symbol	Connector diagram symbol
Male	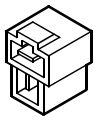	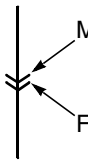 Male	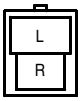
Female	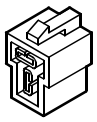	Female	

- Like connectors are linked by dashed lines between the connector symbols.
- Connector diagrams show connectors on the harness side. The terminal indicates the view from the harness side.

(Example)

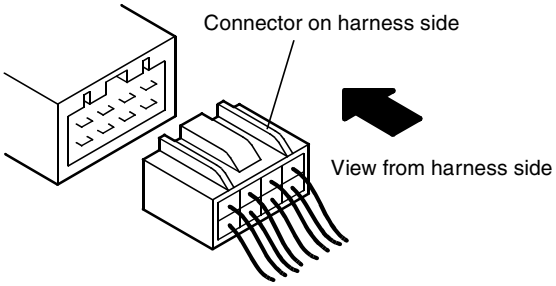

- Colors for connectors except white are given in locations.
- Unused terminals are indicated by ∗.

Routing diagram

- The routing diagram shows where electrical components are on the system circuit diagram by call out line and connector symbols.

Connector symbol

Shows the system that uses the connector.

(Example)

Connector	Symbol
Common connectors	C-02
System connectors	0922-05

Component name

Shows the names of components in routing diagrams.

Ground symbol

Shows the ground in system diagrams.

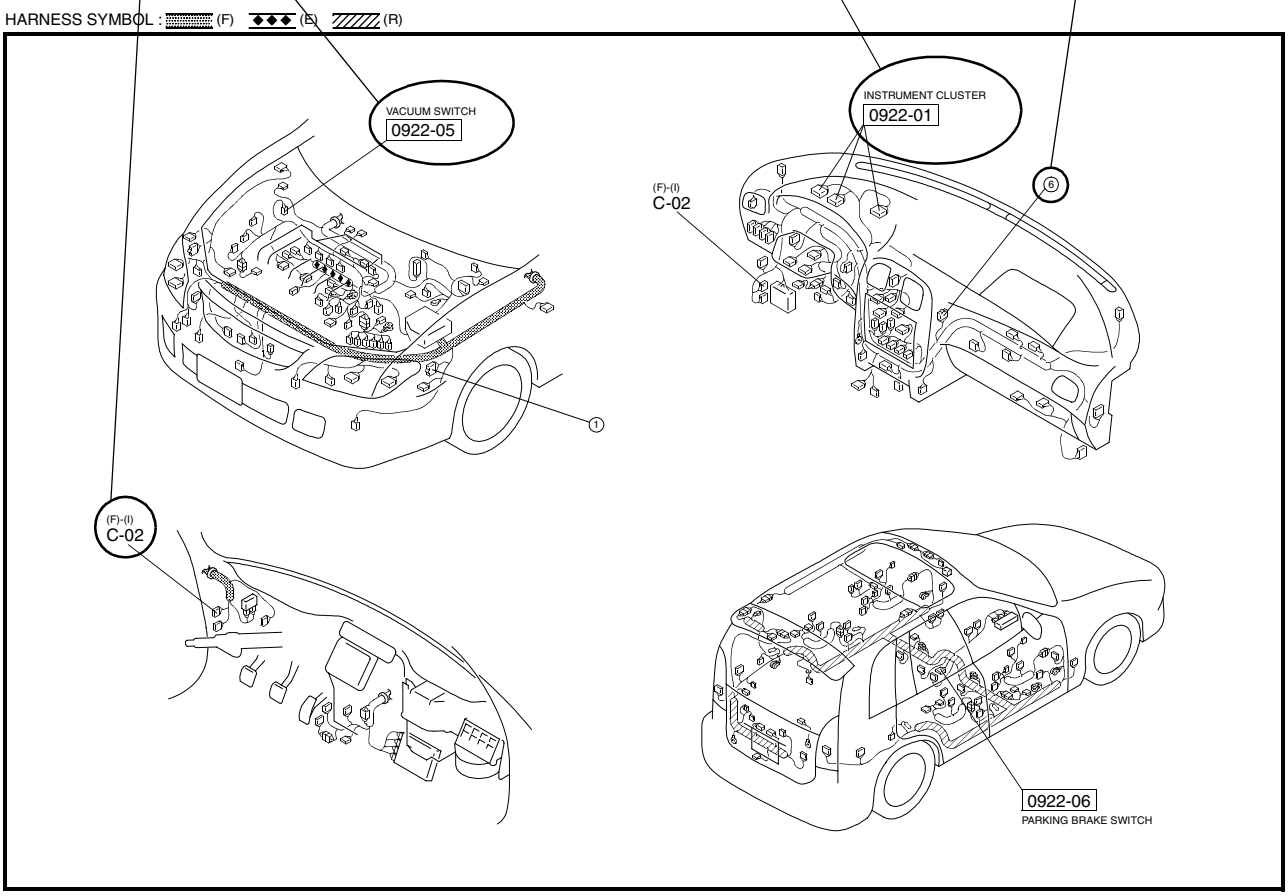

Harness symbols

DESCRIPTION OF HARNESS	SYMBOL		DESCRIPTION OF HARNESS	SYMBOL	
FRONT HARNESS	(F)		DOOR NO.1 HARNESS	(DR1)	—
FRONT NO.2 HARNESS	(F2)		DOOR NO.2 HARNESS	(DR2)	
ENGINE HARNESS	(E)	◆◆◆	DOOR NO.3 HARNESS	(DR3)	
DASH HARNESS	(D)	○○○	DOOR NO.4 HARNESS	(DR4)	
REAR HARNESS	(R)		FLOOR HARNESS	(FR)	—
REAR NO.2 HARNESS	(R2)		INTERIOR LIGHT HARNESS	(IN)	—
REAR NO.3 HARNESS	(R3)		A/C HARNESS	(AC)	—
INSTRUMENT PANEL HARNESS	(I)	—	INJECTION HARNESS	(INJ)	—
EMISSION HARNESS	(EM)	—	HAND BRAKE HARNESS	(HB)	—
EMISSION NO.2 HARNESS	(EM2)				
EMISSION NO.3 HARNESS	(EM3)				

WIRING COLOR CODE

COLOR	CODE	COLOR	CODE
BLACK	B	ORANGE	O
BLUE	L	PINK	P
BROWN	BR	RED	R
DARK BLUE	DL	SKY BLUE	SB
DARK GREEN	DG	TAN	T
GRAY	GY	VIOLET	V
GREEN	G	WHITE	W
LIGHT BLUE	LB	YELLOW	Y
LIGHT GREEN	LG		

Symbols

Symbol	Meaning
Battery	• Generates electricity through chemical reaction. • Supplies direct current to circuits.
Ground (1)	• Connecting point to vehicle body or other ground wire where current flows from positive to negative terminal of battery. • Ground (1) indicates a ground point to body through wire harness. • Ground (2) indicates point where component is grounded directly to body. Remarks • Current will not flow through a circuit if ground is faulty.
Ground (2)	
Ground (3)	
Fuse	• Melts when current flow exceeds that specified for circuit, interrupts current flow. Precautions • Do not replace with fuses exceeding specified capacity. <Blade type> <Tube type> <Cartridge type> <Fusible link>
Fuse (For high current fuse)/ Fusible link	
Transistor (1) Collector (C) Base (B) NPN Emitter (E)	• Electrical switching component. • Turns on when voltage is applied to the base (B). Collector indication mark B E C E C B E C B
Transistor (2) Collector (C) Base (B) PNP Emitter (E)	• Reading code. 2 S C 828 A Revision mark Semiconductor Number of terminals A:High-frequency PNP B:Low-frequency PNP C:High-frequency NPN D:Low-frequency NPN

Symbol	Meaning
Light 3.4W	• Emits light and generates heat when current flows through filament.
Resistance	• A resistor with a constant value. • Mainly used to protect electrical components in circuits by maintaining rated voltage.
Motor M	• Converts electrical energy into mechanical energy.
Pump P	• Pulls in and discharges gases and liquids.
Cigarette lighter	• Electrical coil that generates heat.
Accessory socket	• Interior power supply.
Horn	• Generates sound when current flows.
Speaker + −	
Heater	• Generates heat when current flows.
Ignition switch ST B2 B1 IG2 OFF IG1 OFF ACC	• Turning ignition key switches circuit to operate various component. (NOTE) Ignition switch is called engine switch on diesel vehicles.

Symbol	Meaning	Symbol	Meaning
Switch (1) Normally open (NO)	• Allows or breaks current flow by opening and closing curcuits.	Harness **Connection** When circuit C-D is connected to circuit A-B, the connection D is indicated by a black dot. **Selection** Diversion point D for the different circuits according to the vehicle's specification is indicated by a white dot.	A D B C For vehicles with ABS, use the A-B circuit. WITH ABS A D B WITHOUT ABS C For vehicles without ABS, use the C-B circuit.
Switch (2) Normally closed (NC)			
Autostop switch	• Automatically shuts off circuit when certain conditions are met.		
Relay (1) Normally open (NO)	• Current flowing through coil produces electromagnetic force causing contact to open or close. No current to coil: No flow Current to coil: Flow		
Relay (2) Normally closed (NC)	• Current flowing through coil produces electromagnetic force causing contact to close. No current to coil: Flow Current to coil: No flow		
Sensor (1)	• Detects characteristics such as intake manifold vacuum and airflow amount according to resistance variation.	Solenoid	• Current flowing through coil generates electromagnetic force to operate plungers.
Sensor (2)	• Detects resistance variation according to operation of other parts.	Diode	• Known as a semiconductor rectifier, the diode allows current flow in one direction only. Cathode(K) Anode(A) Flow of electric current K A K A K A
Sensor (3)	• A resistor whose resistance variation according to temperature variation. • When temperature increases, resistance decreases.		
Sensor (4)	• Detects pulse signals from rotating object.	Light-emitting diode (LED)	• A diode that lights when current flows. • Unlike ordinary bulbs, the diode does not generate heat when lit. Cathode(K) Anode(A) Cathode(K) Anode(A) Flow of current
Sensor (5)	• Generates potential difference when tension or pressure is applied.		
Capacitor	• Component that temporarily stores electrical charge.	Reference diode (Zener diode)	• Allows current to flow in one direction up to a certain voltage; allows current to flow in the other direction once that voltage is exceeded.

Symbol	Meaning
Extent of the change in the wiring position (1) 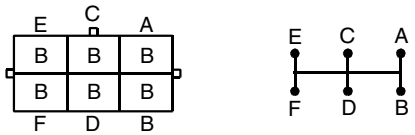 	• The wiring position can be exchanged freely within the connector.
Extent of the change in the wiring position (2) 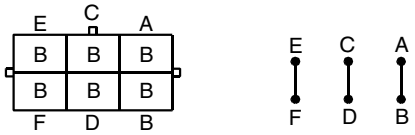 	• The wiring position can be exchanged according to the following combinations only. Between A and B, Between C and D, Between E and F
Extent of the change in the wiring position (3) 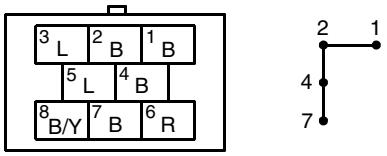 	• The wiring position can be exchanged according to the following combinations only. Between 1, 2, 4 and 7. • The wiring positions may be indicated by numbers for some connectors.

Abbreviations used in this manual

3GR	THIRD GEAR
4GR	FOURTH GEAR
A	AMPERE
A/C	AIR CONDITIONING
A/F	AIR FUEL
AAS	AUTO ADJUSTING SUSPENSION
ABS	ANTI-LOCK BRAKING SYSTEM
ACC	ACCESSORIES
ACV	AIR CONTROL VALVE
ADD	ADDITIONAL
AIS	AIR INJECTION SYSTEM
ALL	AUTOMATIC LOAD LEVELING
AM	AMPLITUDE MODULATION
AMP	AMPLIFIER
ANT	ANTENNA
ASV	AIR SUPPLY VALVE
AT	AUTOMATIC TRANSMISSION
ATX	AUTOMATIC TRANSAXLE
B+	BATTERY POSITIVE VOLTAGE
BAC	BYPASS AIR CONTROL
CAN	CONTROLLER AREA NETWORK
CIGAR	CIGARETTE
CIS	CONTINUOUS FUEL INJECTION SYSTEM
CKP	CRANKSHAFT POSITION SENSOR
CM	CONTROL MODULE
CMP	CAMSHAFT POSITION SENSOR
COMBI	COMBINATION

CON	CONDITIONER
CONT	CONTROL
CPU	CENTRAL PROCESSING UNIT
DEF	DEFROSTER
DI	DISTRIBUTOR IGNITION
DLC	DATA LINK CONNECTOR
DLI	DISTRIBUTORLESS IGNITION
DOHC	DOUBLE-OVERHEAD CAMSHAFT
DRL	DAYTIME RUNNING LIGHT
DTC	DIAGNOSTIC TROUBLE CODE(S)
DTM	DIAGNOSTIC TEST MODE
ECPS	ELECTRONICALLY CONTROLLED POWER STEERING
ECT	ENGINE CONTROL TEMPERATURE
EGR	EXHAUST GAS RECIRCULATION
EHPAS	ELECTRO HYDRAULIC POWER ASSIST STEERING
EI	ELECTRONIC IGNITION
ELEC	ELECTRIC
ELR	EMERGENCY LOCKING RETRACTOR
ET	ELECTRONIC THROTTLE
EVAP	EVAPORATIVE EMISSION
F	FRONT
F/I	FUEL INJECTOR
FICB	FAST-IDLE CAM BREAKER
FM	FREQUENCY MODULATION
FP	FUEL PUMP
FPR	FUEL PUMP RELAY

GEN	GENERATOR
GND	GROUND
H/D	HEATER/DEFROSTER
HEAT	HEATER
HI	HIGH
HO2S	HEATED OXYGEN SENSOR
HS	HIGH SPEED
HU	HYDRAULIC UNIT
IAC	IDLE AIR CONTROL
IAT	INTAKE AIR TEMPERATURE
IG	IGNITION
ILLUMI	ILLUMINATION
INT	INTERMITTENT
JB	JOINT BOX
KS	KNOCK SENSOR
LCD	LIQUID CRYSTAL DISPLAY
LF	LEFT FRONT
LH	LEFT HAND
LO	LOW
LR	LEFT REAR
M	MOTOR
MAF	MASS AIR FLOW
MAP	MANIFOLD ABSOLUTE PRESSURE
MFI	MULTIPORT FUEL INJECTION
MID	MIDDLE
MIL	MALFUNCTION INDICATOR LAMP
MIN	MINUTE
MIX	MIXTURE
MPX	MULTIPLEX
MS	MIDDLE SPEED
MT	MANUAL TRANSMISSION
MTX	MANUAL TRANSAXLE
N	NEUTRAL
NC	NORMALLY CLOSED
NO	NORMALLY OPEN
O2S	OXYGEN SENSOR
OBD	ON-BOARD DIAGNOSTIC
O/D	OVER DRIVE
OFF	SWITCH OFF
ON	SWITCH ON
OSC	OSCILLATOR
P	POWER
P/S	POWER STEERING
PCM	POWERTRAIN CONTROL MODULE
PJB	PASSENGER JUNCTION BOX
PNP	PARK/NEUTRAL POSITION
PRC	PRESSURE REGULATOR CONTROL
PRG	PURGE SOLENOID VALVE
PSP	POWER STEERING PRESSURE
PTC	POSITIVE TEMPERATURE COEFFICIENT HEATER

PWM	PULSE WIDTH MODULATION
QSS	QUICK-START SYSTEM
R	REAR
REC	RECIRCULATION
RF	RIGHT FRONT
RH	RIGHT HAND
RPM	REVOLUTIONS PER MINUTE
RR	RIGHT REAR
SAS	SOPHISTICATED AIR BAG SENSOR
SFI	SEQUENTIAL MULTIPOINT FUEL INJECTION
SOL	SOLENOID
SPV	SPILL VALVE
ST	START
SW	SWITCH
TC	TURBOCHARGER
TCC	TORQUE CONVERTER CLUTCH
TCM	TRANSMISSION(TRANSAXLE)CONTROL MODULE
TCS	TRACTION CONTROL SYSTEM
TEMP	TEMPERATURE
TFT	TRANSAXLE FLUID TEMPERATURE
TICS	TRIPLE INDUCTION CONTROL SYSTEM
TNS	TAIL NUMBER SIDE LIGHTS
TP	THROTTLE POSITION SENSOR
TR	TRANSMISSION(TRANSAXLE)RANGE
TWS	TOTAL WIRING SYSTEM
V	VOLT
VAF	VOLUME AIR FLOW SENSOR
VENT	VENTILATION
VICS	VARIABLE INERTIA CHARGING SYSTEM
VOL	VOLUME
VR	VOLTAGE REGULATOR
VRIS	VARIABLE RESONANCE INDUCTION SYSTEM
VSS	VEHICLE SPEED SENSOR
VTCS	VARIABLE TUMBLE CONTROL SYSTEM
W	WATT(S)
WOT	WIDE OPEN THROTTLE

ELECTRICAL PARTS

B6U000000006W03

Battery cable

- Before disconnecting connectors or removing electrical parts, disconnect the negative battery cable.

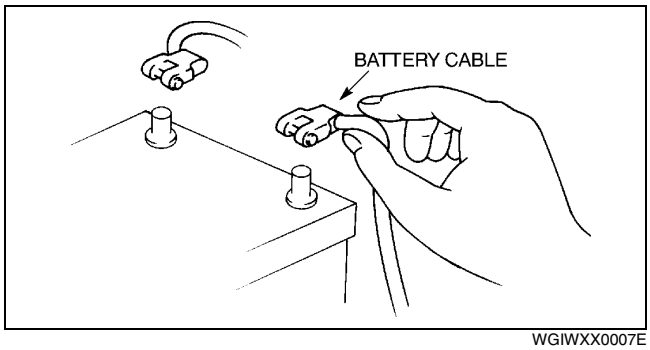

WGIWXX0007E

Wiring Harness

- To remove the wiring harness from the clip in the engine room, pry up the hook of the clip using a flathead screwdriver.

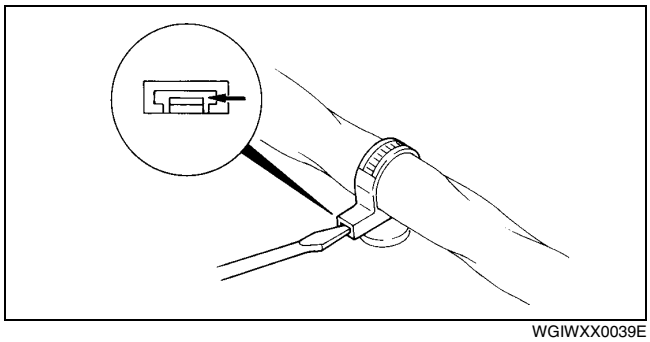

WGIWXX0039E

Caution

- **Do not remove the Harness protective tape. Otherwise, the wires could rub against the body, which could result in water penetration and electrical shorting.**

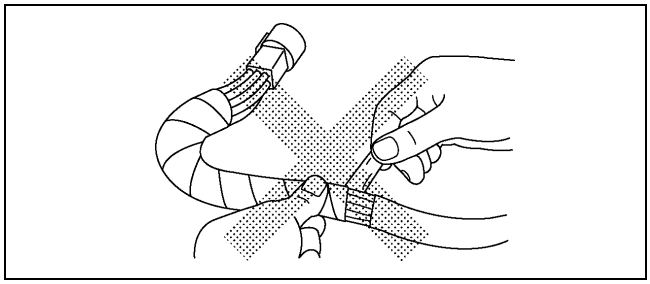

WGIWXX0040E

CONNECTORS

Data link connector

- Insert the probe into the terminal when connecting a jumper wire to the data link connector.

Caution

- **Inserting a jumper wire probe into the data link connector terminal may damage the terminal.**

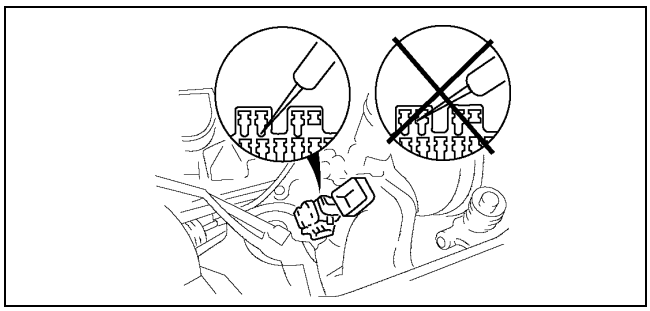

X3U000WAY

Disconnecting connectors

- When disconnecting connector, grasp the connectors, not the wires.

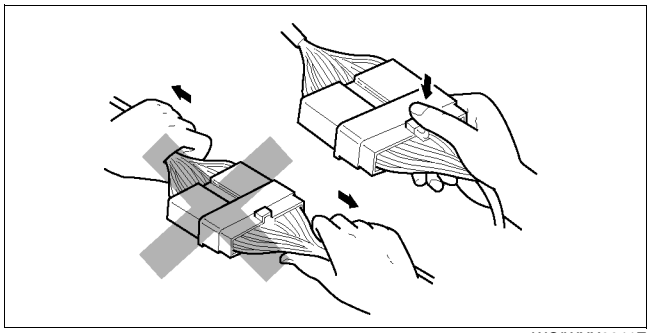

WGIWXX0041E

- Connectors can be disconnected by pressing or pulling the lock lever as shown.

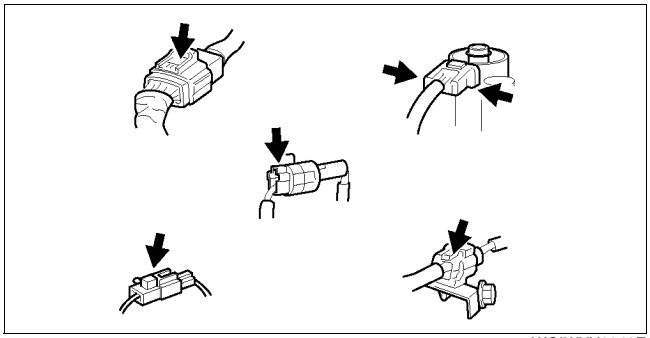

WGIWXX0042E

Locking connector

- When locking connectors, listen for a click indicating they are securely locked.

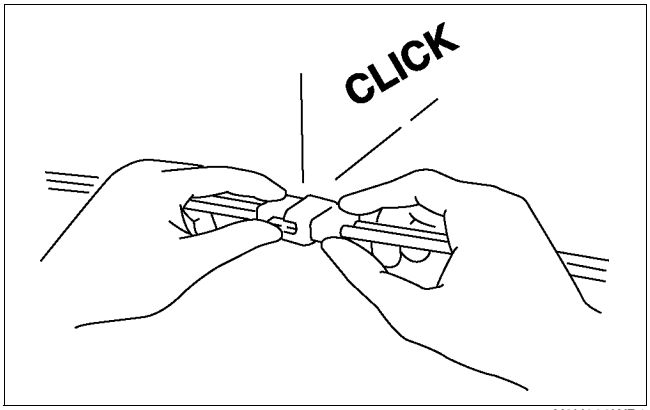

X3U000WB1

Inspection

- When a tester is used to inspect for continuity or measuring voltage, insert the tester probe from the wiring harness side.

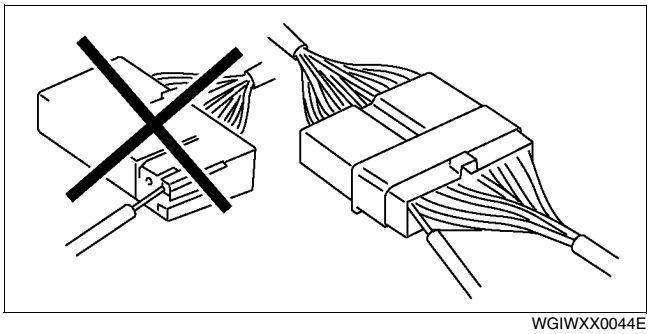

WGIWXX0044E

- Inspect the terminals of waterproof connectors from the connector side since they cannot be accessed from the wiring harness side.

  Caution
  - **To prevent damage to the terminal, wrap a thin wire around the tester probe before inserting into terminal.**

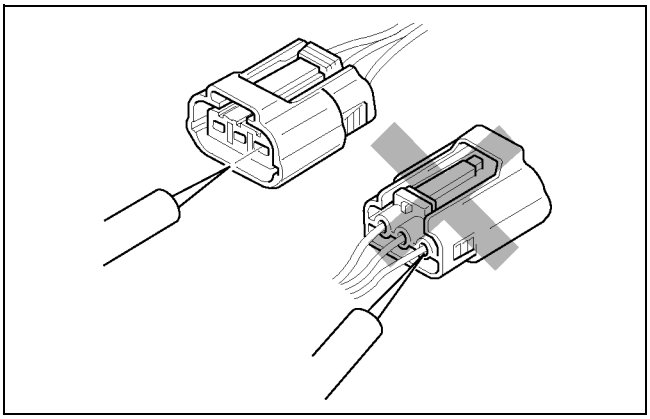

WGIWXX0045E

Terminals

Inspection

- Pull lightly on individual wires to verify that they are secured in the terminal.

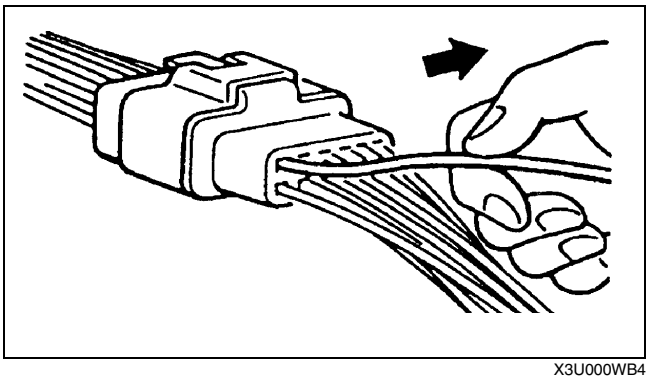

X3U000WB4

Replacement

- Use the appropriate tools to remove a terminal as shown. When installing a terminal, be sure to insert it until it locks securely.
- Insert a thin piece of metal from the terminal side of the connector and with the terminal locking tab pressed down, pull the terminal out from the connector.

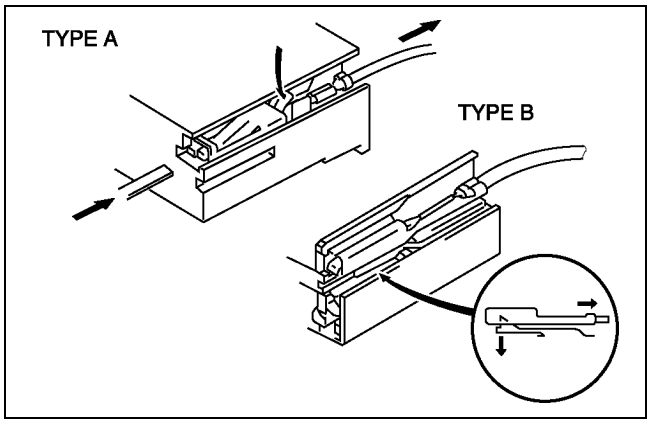

X3U000WB5

Sensors, Switches, and Relays

- Handle sensors, switches, and relays carefully. Do not drop them or strike them against other objects.

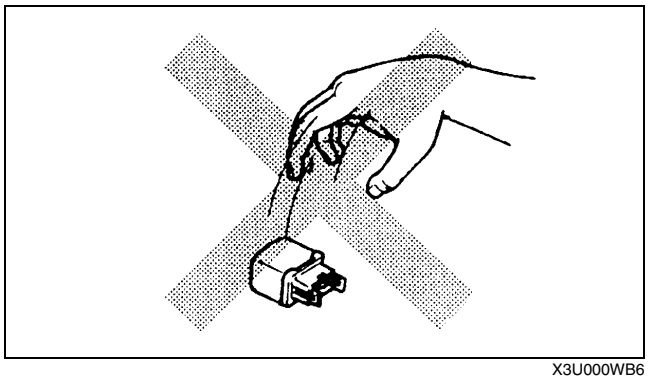

X3U000WB6

Fuse

Replacement

- When replacing a fuse, be sure to replace it with one of the same capacity. If a fuse fails again, the circuit probably has a short and the wiring should be inspected.
- Be sure the negative battery terminal is disconnected before replacing a main fuse.

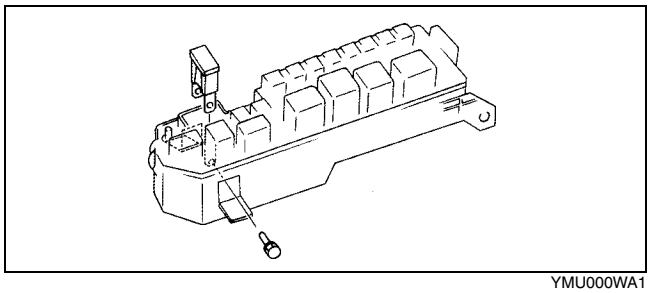

YMU000WA1

- When replacing a pullout fuse, use the fuse puller.

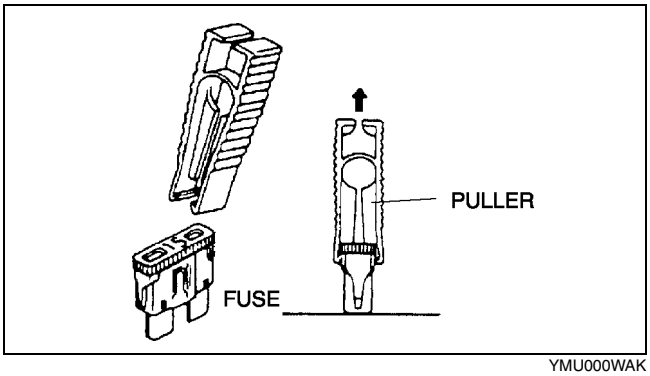

YMU000WAK

ELECTRICAL TROUBLESHOOTING TOOLS

Jumper wire

- A jumper wire is used to create a temporary circuit. Connect the jumper wire between the terminals of a circuit to bypass a switch.

  Caution
  - **Do not connect a jumper wire from the power source line to a body ground. This may cause burning or other damage to wiring harnesses or electronic components.**

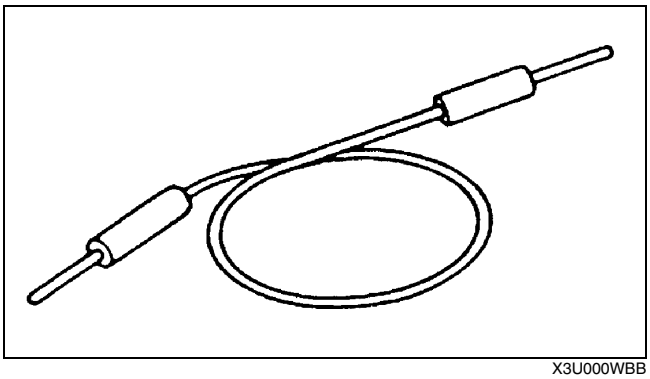

X3U000WBB

Voltmeter

- The DC voltmeter is used to measure circuit voltage. A voltmeter with a range of **15 V or more** is used by connecting the positive (+) probe (red lead wire) to the point where voltage will be measured and the negative (-) probe (black lead wire) to a body ground.

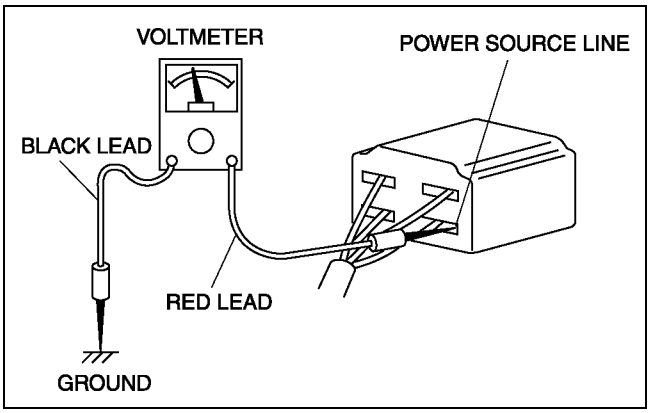

X3U000WBC

Ohmmeter

- The ohmmeter is used to measure the resistance between two points in a circuit and to inspect for continuity and short circuits.

  Caution
  - **Do not connect the ohmmeter to any circuit where voltage is applied. This will damage the ohmmeter.**

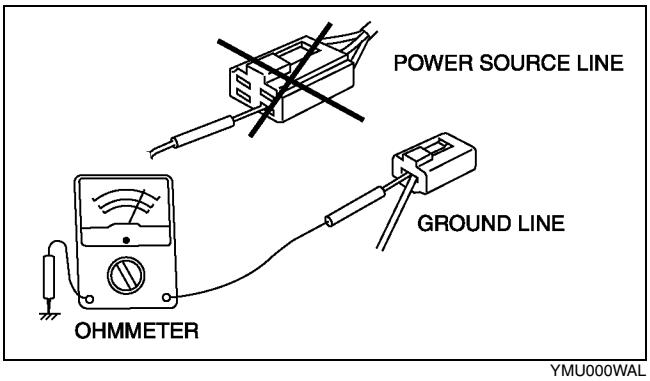

YMU000WAL

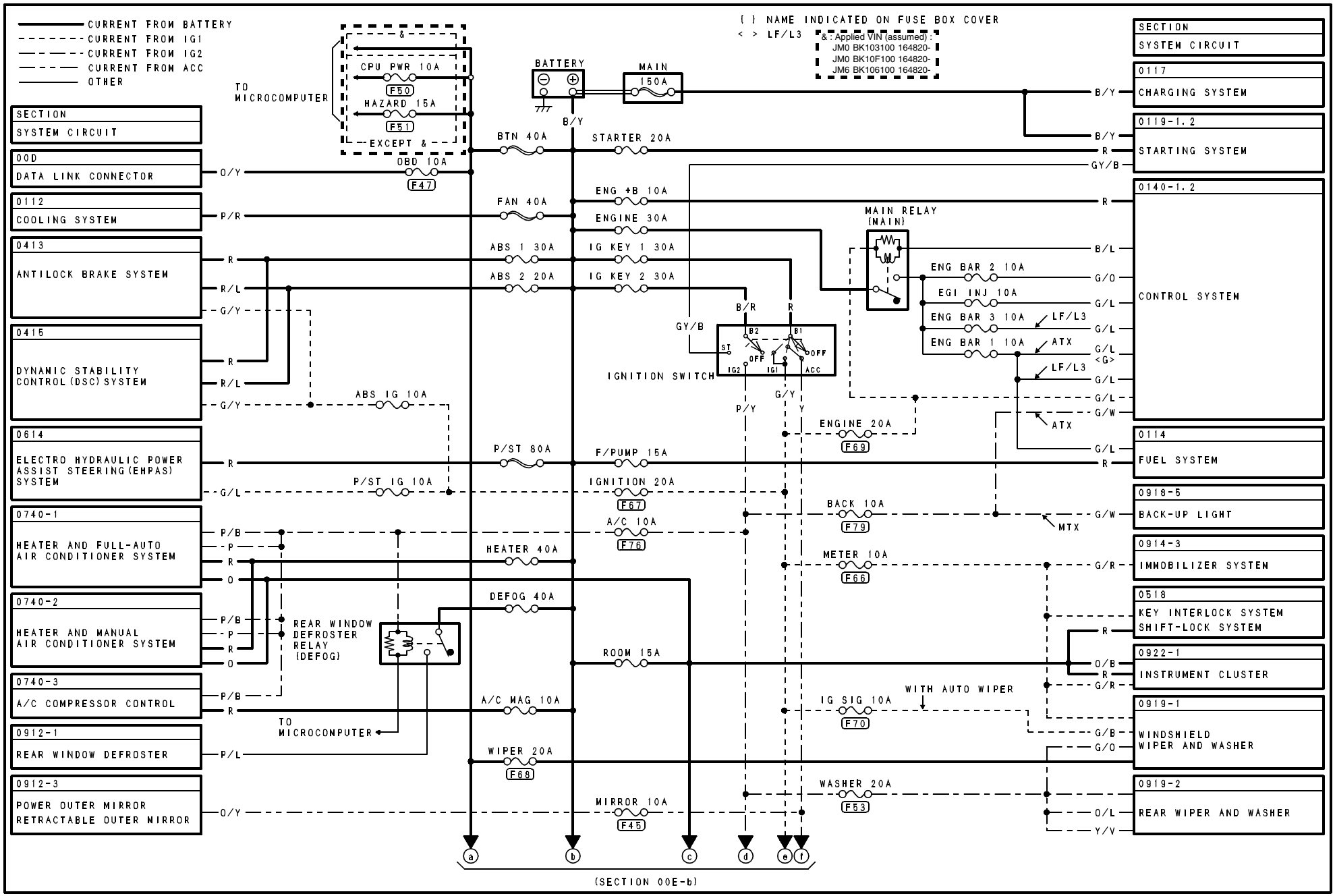
CURRENT FROM BATTERY
CURRENT FROM IG1
CURRENT FROM IG2
CURRENT FROM ACC
OTHER
{ } NAME INDICATED ON FUSE BOX COVER
< > LF/L3
& : Applied VIN (assumed) :
JM0 BK103100 164820-
JM0 BK10F100 164820-
JM6 BK106100 164820-
SECTION
SYSTEM CIRCUIT
00D
DATA LINK CONNECTOR
0112
COOLING SYSTEM
0413
ANTILOCK BRAKE SYSTEM
0415
DYNAMIC STABILITY CONTROL (DSC) SYSTEM
0614
ELECTRO HYDRAULIC POWER ASSIST STEERING (EHPAS) SYSTEM
0740-1
HEATER AND FULL-AUTO AIR CONDITIONER SYSTEM
0740-2
HEATER AND MANUAL AIR CONDITIONER SYSTEM
0740-3
A/C COMPRESSOR CONTROL
0912-1
REAR WINDOW DEFROSTER
0912-3
POWER OUTER MIRROR RETRACTABLE OUTER MIRROR
TO MICROCOMPUTER
CPU PWR 10A
F50
HAZARD 15A
F51
EXCEPT &
OBD 10A
F47
BATTERY
MAIN 150A
BTN 40A
STARTER 20A
FAN 40A
ENG +B 10A
ENGINE 30A
ABS 1 30A
IG KEY 1 30A
ABS 2 20A
IG KEY 2 30A
ABS IG 10A
P/ST 80A
F/PUMP 15A
P/ST IG 10A
IGNITION 20A
F67
A/C 10A
F76
HEATER 40A
DEFOG 40A
ROOM 15A
A/C MAG 10A
WIPER 20A
F68
MIRROR 10A
F45
MAIN RELAY (MAIN)
ENG BAR 2 10A
EGI INJ 10A
ENG BAR 3 10A
ENG BAR 1 10A
LF/L3
ATX
IGNITION SWITCH
ENGINE 20A
F69
BACK 10A
F79
MTX
METER 10A
F66
REAR WINDOW DEFROSTER RELAY (DEFOG)
IG SIG 10A
F70
WITH AUTO WIPER
WASHER 20A
F53
(SECTION 00E-b)
SECTION
SYSTEM CIRCUIT
0117
CHARGING SYSTEM
0119-1, 2
STARTING SYSTEM
0140-1, 2
CONTROL SYSTEM
0114
FUEL SYSTEM
0918-5
BACK-UP LIGHT
0914-3
IMMOBILIZER SYSTEM
0518
KEY INTERLOCK SYSTEM
SHIFT-LOCK SYSTEM
0922-1
INSTRUMENT CLUSTER
0919-1
WINDSHIELD WIPER AND WASHER
0919-2
REAR WIPER AND WASHER

ELECTRICAL WIRING SCHEMATIC

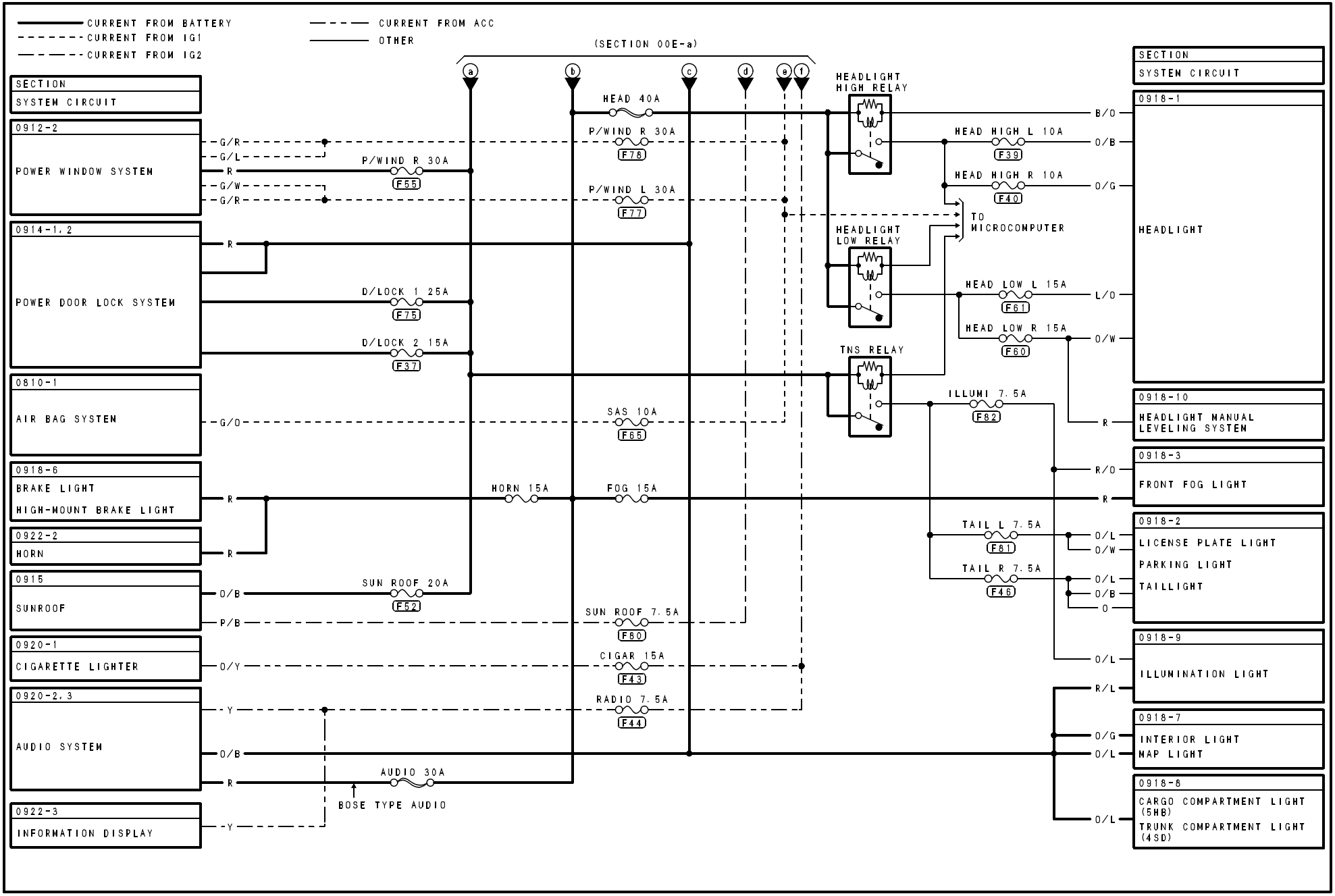

F-01 FUSE AND RELAY BOX(F)

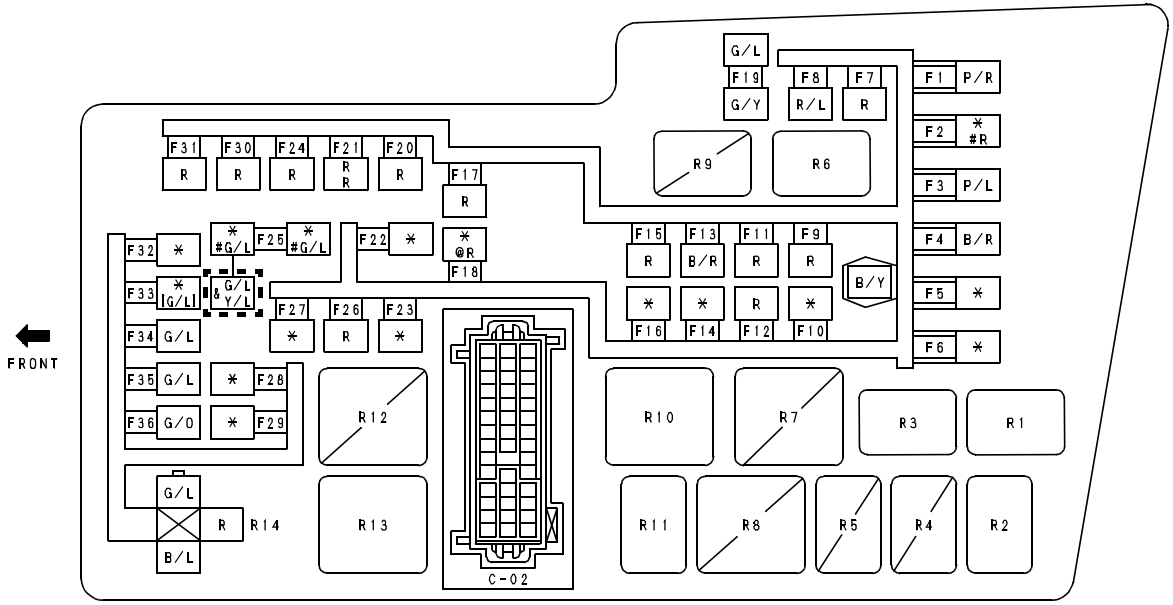

NOTE:SEEN FROM TERMINAL SIDE

NO.	FUSE NAME	FUSE	NO.	FUSE NAME	FUSE
F1	FAN	40A	F19	ABS IG	10A
F2	(P/ST)	80A	F20	(FOG)	15A
F3	BTN	40A	F21	HORN	15A
F4	HEAD	40A	F22	———	——
F5	<PTC>	80A	F23	<H/CLEAN>	20A
F6	<GLOW>	60A	F24	F/PUMP	15A
F7	ABS 1	30A	F25	(P/ST IG)	10A
F8	ABS 2	20A	F26	A/C MAG	10A
F9	ENGINE	30A	F27	<ALT>	10A
F10	———	——	F28	———	——
F11	IG KEY 1	30A	F29	———	——
F12	STARTER	20A	F30	ENG +B	10A
F13	IG KEY 2	30A	F31	ROOM	15A
F14	———	——	F32	<ENG BAR 4>	10A
F15	HEATER	40A	F33	(ENG BAR 3)	10A
F16	———	——	F34	EGI INJ	10A
F17	DEFOG	40A	F35	ENG BAR 1	10A
F18	(AUDIO)	30A	F36	ENG BAR 2	10A

* VACANT
\# WITH EHPAS
[ ] LF/L3
< > NOT USED
( ) IF EQUIPPED
{ } NAME INDICATED ON FUSE BOX COVER
@ BOSE TYPE AUDIO

& Applied VIN(assumed):
JM0 BK103100 150354-
JM0 BK10F100 150354-
JM6 BK106100 150354-

NO.	RELAY NAME	NO.	RELAY NAME
R1	FRONT FOG LIGHT RELAY {FOG}	R8	———
R2	HORN RELAY {HORN}	R9	<H/CLEAN>
R3	REAR WINDOW DEFROSTER RELAY {DEFOG}	R10	BLOWER RELAY {HEATER}
R4	<ETV>	R11	A/C RELAY {A/C}
R5	<F/WARM>	R12	———
R6	FUEL PUMP RELAY {CIRCUIT}	R13	STARTER RELAY {STARTER}
R7	———	R14	MAIN RELAY {MAIN}

THIS PAGE INTENTIONALLY LEFT BLANK

PASSENGER JUNCTION BOX (PJB)

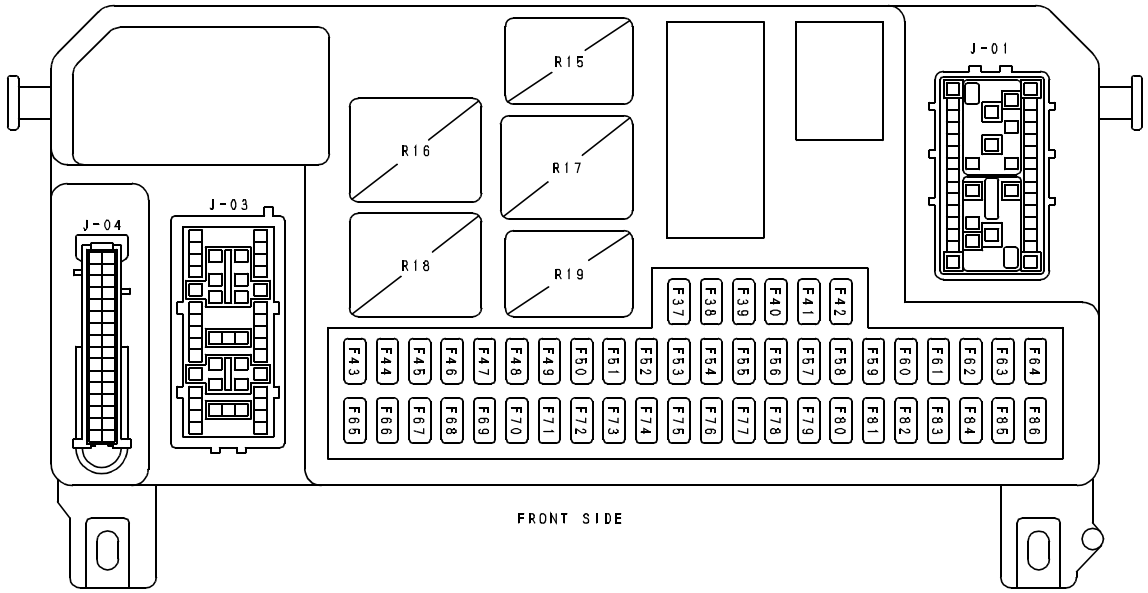

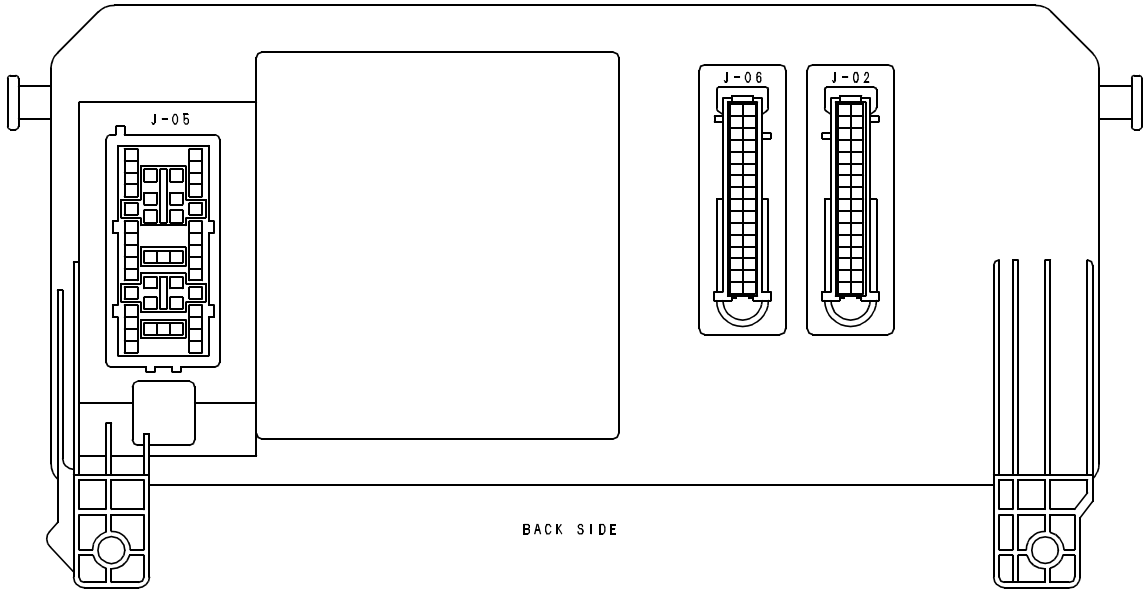

( ) IF EQUIPPED < > NOT USED
RELAY BUILT INTO PJB

NO.	FUSE NAME	FUSE	NO.	FUSE NAME	FUSE
F37	(D/LOCK 2)	15A	F62	———	——
F38	———	——	F63	———	——
F39	HEAD HIGH L	10A	F64	———	——
F40	HEAD HIGH R	10A	F65	SAS	10A
F41	———	——	F66	METER	10A
F42	———	——	F67	IGNITION	20A
F43	CIGAR	15A	F68	WIPER	20A
F44	RADIO	7.5A	F69	ENGINE	20A
F45	(MIRROR)	10A	F70	(IG SIG)	10A
F46	TAIL R	7.5A	F71	<SAS 2>	7.5A
F47	OBD	10A	F72	———	——
F48	———	——	F73	———	——
F49	<TR/LOCK>	20A	F74	<SEAT WARM>	20A
F50	(CPU PWR)	10A	F75	D/LOCK 1	25A
F51	(HAZARD)	15A	F76	A/C	10A
F52	(SUN ROOF)	20A	F77	(P/WIND L)	30A
F53	WASHER	20A	F78	(P/WIND R)	30A
F54	———	——	F79	BACK	10A
F55	(P/WIND R)	30A	F80	(SUN ROOF)	7.5A
F56	<P/WIND L>	30A	F81	TAIL L	7.5A
F57	<ALARM>	7.5A	F82	ILLUMI	7.5A
F58	<M/DEF>	7.5A	F83	———	——
F59	———	——	F84	———	——
F60	HEAD LOW R	15A	F85	———	——
F61	HEAD LOW L	15A	F86	———	——

NO.	RELAY NAME	NO.	RELAY NAME
R15	———	#R25	FRONT WIPER LOW RELAY
R16	———	#R26	FRONT WIPER HIGH RELAY
R17	———	#R27	HEADLIGHT HIGH RELAY
R18	———	#R28	TNS RELAY
R19	<RUNNING LIGHT RELAY>	#R29	<DRIVER DOOR UNLOCK>
R20	———	#R30	(DOUBLE LOCK RELAY)
R21	———	#R31	DOOR UNLOCK RELAY
#R22	<TRUNK LID OPENER RELAY>	#R32	DOOR LOCK RELAY
#R23	HEADLIGHT LOW RELAY	#R33	REAR WIPER RELAY
#R24	SHIFT-LOCK RELAY	#R34	<REAR FOG LIGHT RELAY>

PASSENGER JUNCTION BOX (PJB)

J-01 FRONT HARNESS(F)

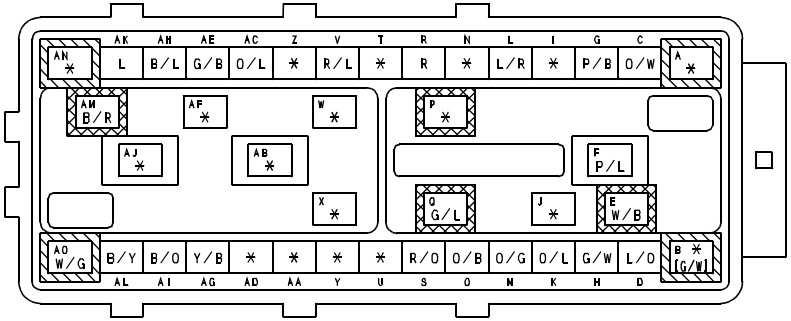

[ ] WITH ABS OR DSC OR EHPAS
* VACANT

J-02 FRONT HARNESS(F)

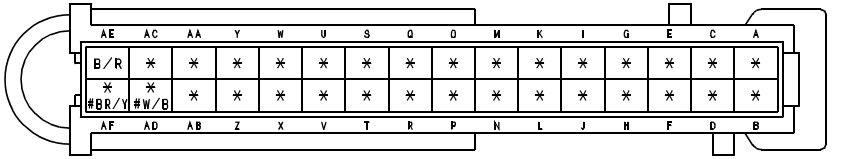

* VACANT
# WITH AMBIENT TEMPERATURE SENSOR

J-03 INSTRUMENT PANEL HARNESS(I)

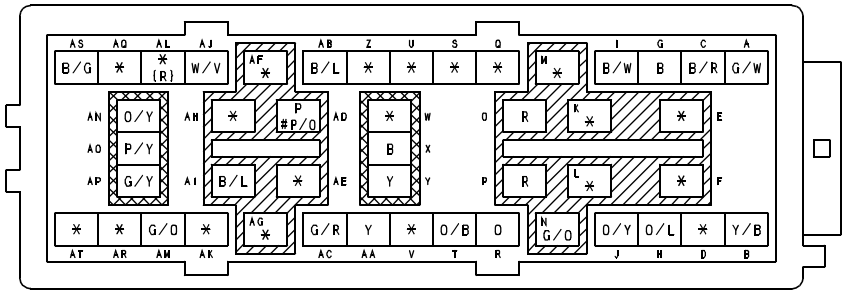

{ } WITH HEADLIGHT MANUAL LEVELING SYSTEM
WITH AUTO A/C * VACANT

J-04 INSTRUMENT PANEL HARNESS(I)

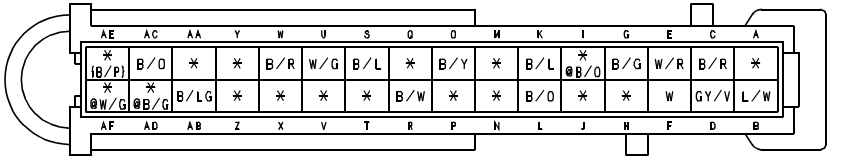

{ } WITH AUTO LIGHT SYSTEM
@ WITH MANUAL A/C
* VACANT

J-05 REAR HARNESS(R)

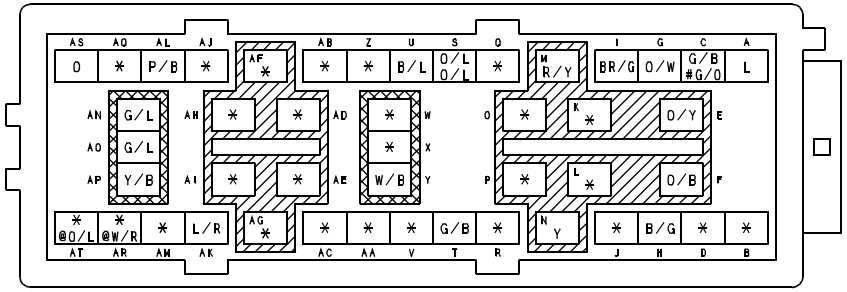

@ WITH REAR WIPER AND WASHER
# 4SD * VACANT

J-06 REAR HARNESS(R)

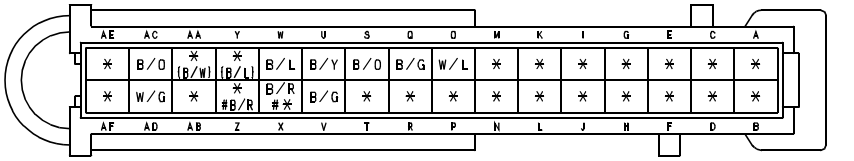

{ } DOUBLE LOCKING SYSTEM
4SD * VACANT

PASSENGER JUNCTION BOX (PJB)

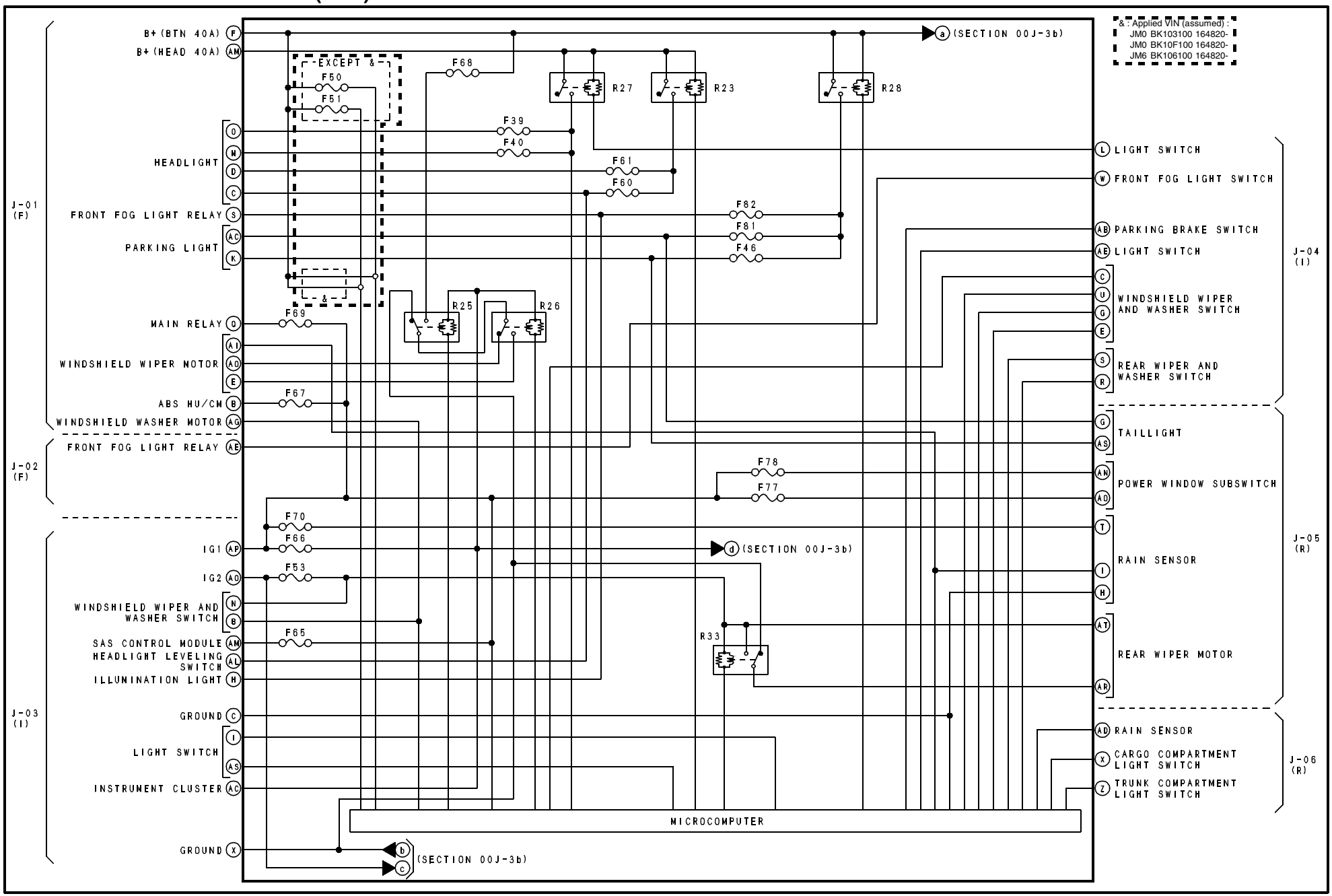

PASSENGER JUNCTION BOX (PJB)

JM0 BK103100 116907- JM6 BK106100 116907-
JM0 BK10F100 116907- JM6 BK10Y100 116907-

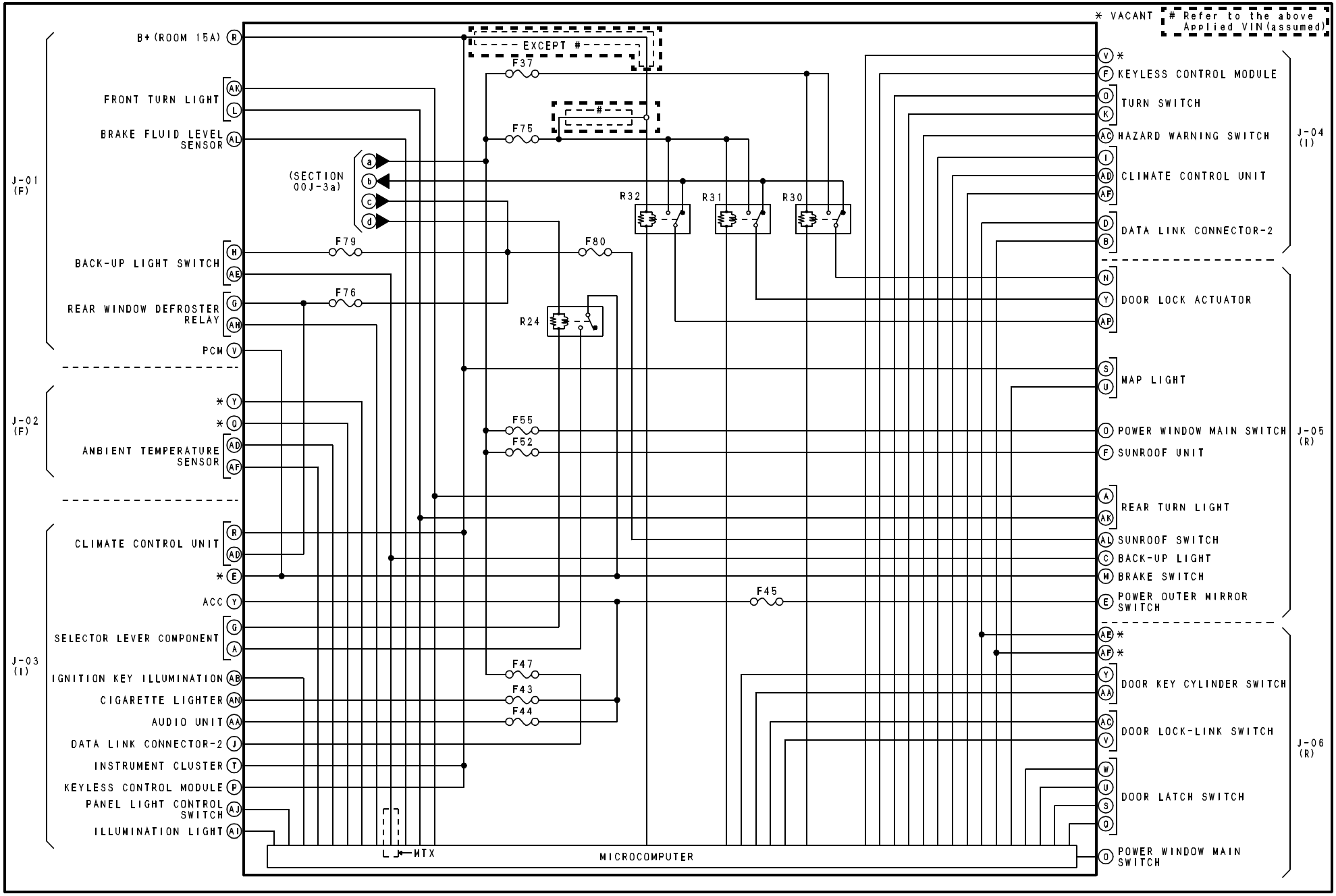

C-02 FRONT(F)-ENGINE(E)

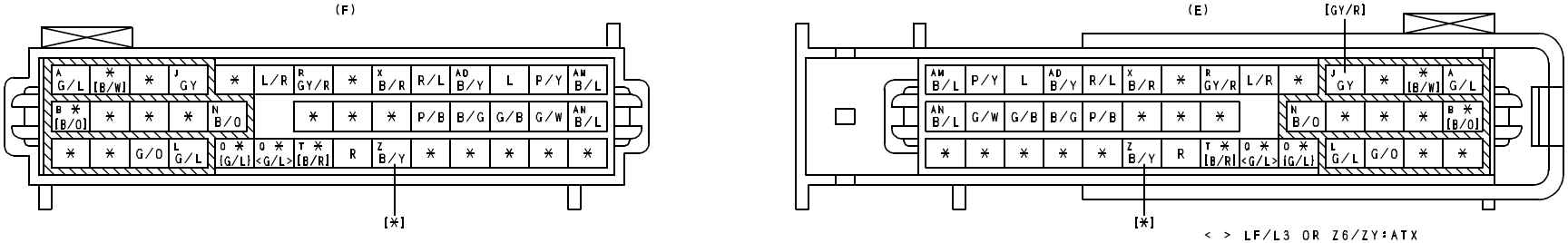

< > LF/L3 OR Z6/ZY:ATX
{ } LF/L3 [ ] ATX
* VACANT

C-03 IGNITION SWITCH/
KEY REMINDER SWITCH(I)

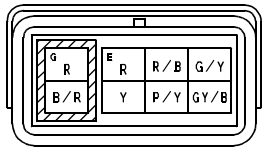

C-04 FRONT(F)-INSTRUMENT PANEL(I)

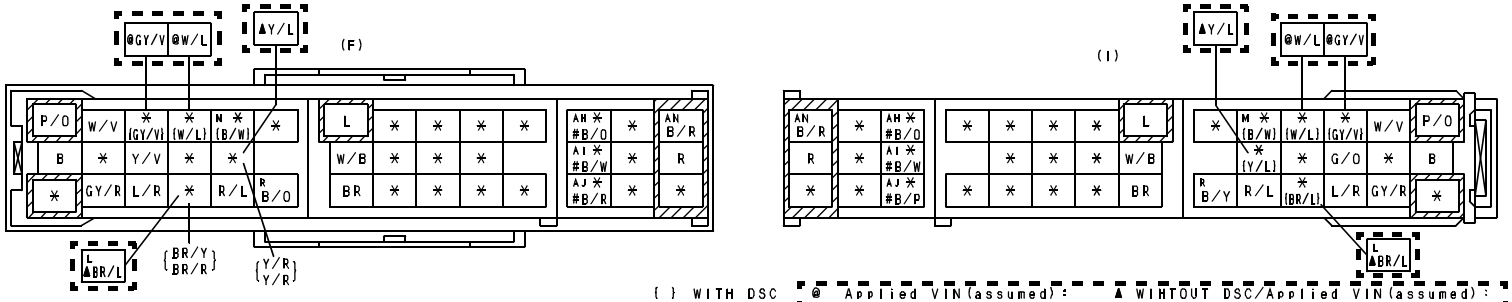

{ } WITH DSC
ATX
* VACANT

@ Applied VIN(assumed):
JM0 BK103100 150354-
JM0 BK10F100 150354-
JM6 BK106100 150354-

▲ WIHTOUT DSC/Applied VIN(assumed):
JM0 BK103100 150354-
JM0 BK10F100 150354-
JM6 BK106100 150354-

C-05 FRONT(F)-REAR(R)

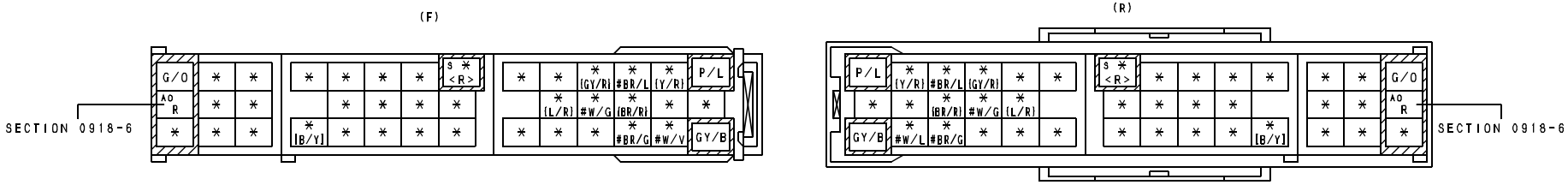

WITH ABS OR DSC * VACANT
[ ] MTX { } WITH DSC < > BOSE TYPE AUDIO

C-06 INSTRUMENT PANEL(I)-REAR(R)

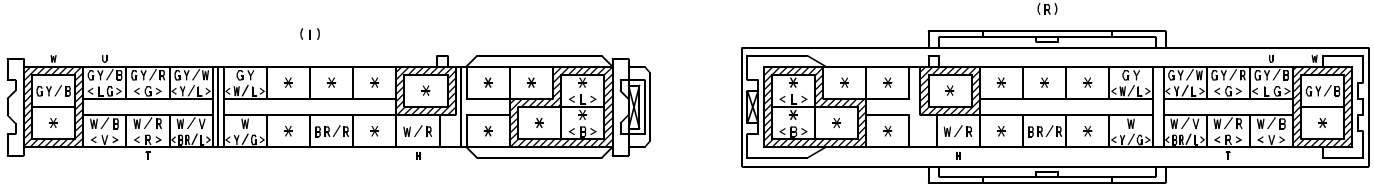

< > BOSE TYPE AUDIO
* VACANT

COMMON CONNECTOR LIST

C-07 REAR(R)-DOOR NO. 1(DR1)

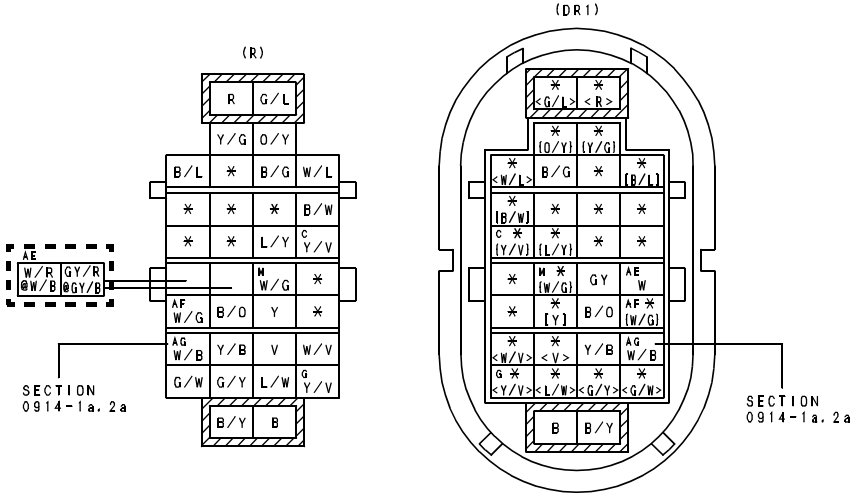

< > WITH POWER WINDOW SYSTEM
{ } WITH POWER OUTER MIRROR/RETRACTABLE OUTER MIRROR
[ ] WITH DOUBLE LOCKING SYSTEM
@ BOSE TYPE AUDIO
* VACANT

C-08 REAR(R)-DOOR NO. 2(DR2)

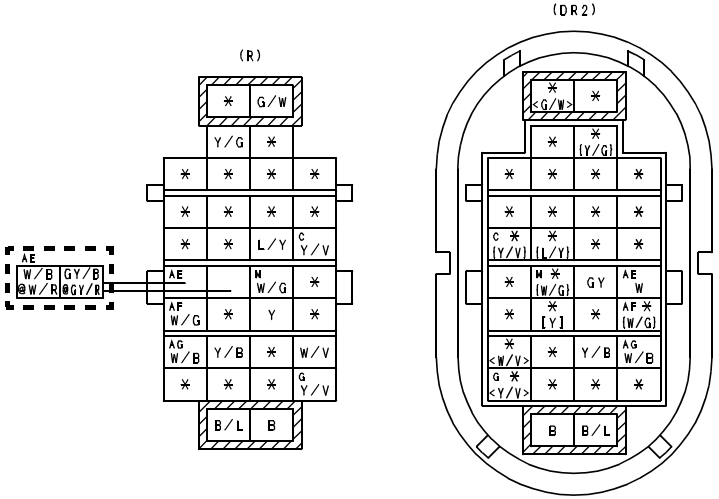

< > WITH POWER WINDOW SYSTEM
{ } WITH POWER OUTER MIRROR/RETRACTABLE OUTER MIRROR
[ ] WITH DOUBLE LOCKING SYSTEM
@ BOSE TYPE AUDIO
* VACANT

C-09 REAR(R)-DOOR NO. 3(DR3)

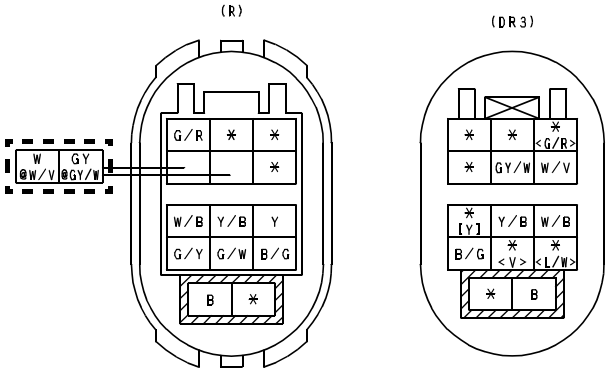

< > WITH POWER WINDOW SYSTEM
[ ] WITH DOUBLE LOCKING SYSTEM
@ BOSE TYPE AUDIO
* VACANT

C-10 REAR(R)-DOOR NO. 4(DR4)

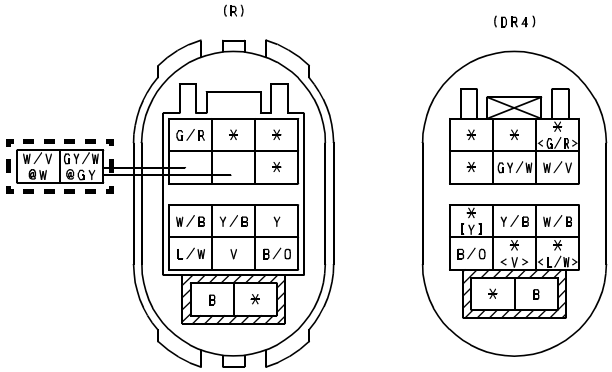

< > WITH POWER WINDOW SYSTEM
[ ] WITH DOUBLE LOCKING SYSTEM
@ BOSE TYPE AUDIO
* VACANT

C-11 REAR(R)-INTERIOR LIGHT(IN)

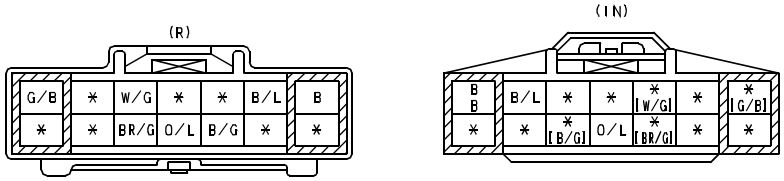

* VACANT
[ ] WITH AUTO WIPER

C-12 REAR(R)-INTERIOR NO.2(IN2)

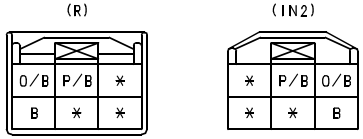

* VACANT

(WITH SUNROOF)

C-13 REAR(R)-REAR NO.3(R3)

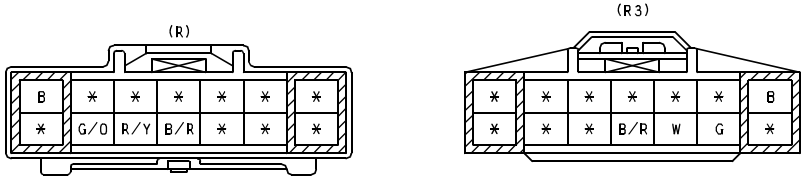

* VACANT

(4SD)

C-14 EMISSION(EM)-INJECTION(INJ)

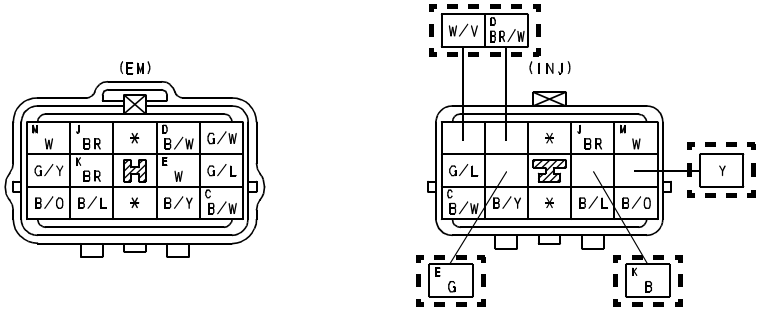

* VACANT

(LF/L3)

C-15 REAR(R)-SHORT CORD

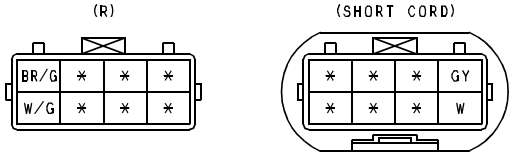

* VACANT

C-16 EMISSION(EM)-ENGINE(E)

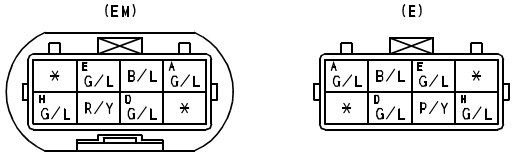

* VACANT

(LF/L3)

COMMON CONNECTOR LIST

C-17 JOINT CONNECTOR (I)

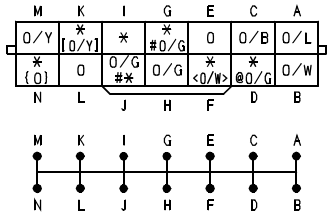

* VACANT
\# WITH AUTO A/C
@ WITH AUDIO CONTROL SWITCH
[ ] ATX
< > WITH DSC
{ } WITH HEADLIGHT MANUAL LEVELING SYSTEM

C-18 JOINT CONNECTOR (I)

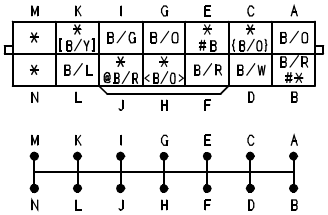

* VACANT
\# WITH AUTO A/C
@ WITH AUDIO CONTROL SWITCH
[ ] ATX
< > WITH DSC
{ } WITH HEADLIGHT MANUAL LEVELING SYSTEM

C-19 REAR (R) - SHORT CORD

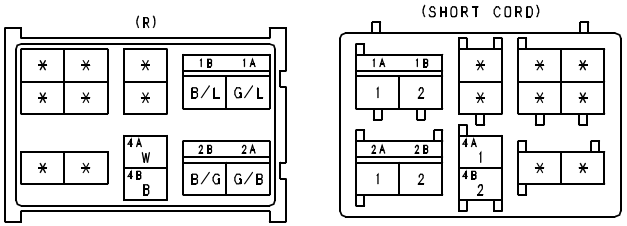

* VACANT

TERMINALS OF THIS CONNECTOR ARE INDICATED BY NUMBERS.

C-20 REAR (R) - SHORT CORD

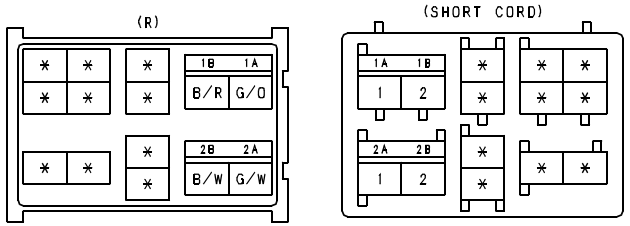

* VACANT

TERMINALS OF THIS CONNECTOR ARE INDICATED BY NUMBERS.

C-21 REAR (R) - SHORT CORD

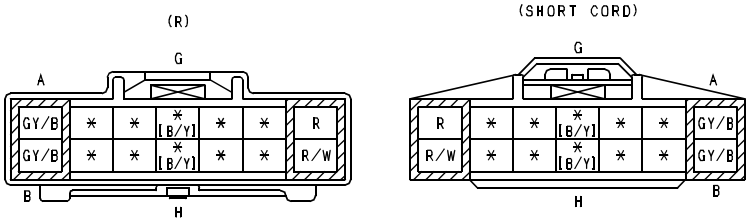

* VACANT
[ ] MTX

C-22 REAR (R) - REAR NO. 2 (R2)

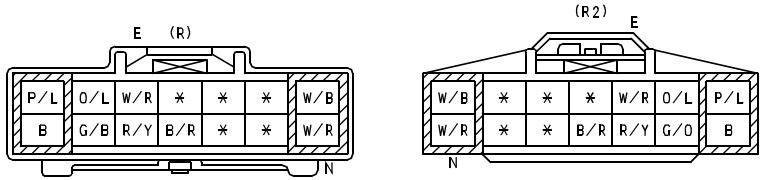

* VACANT

(5HB)

GROUND POINT

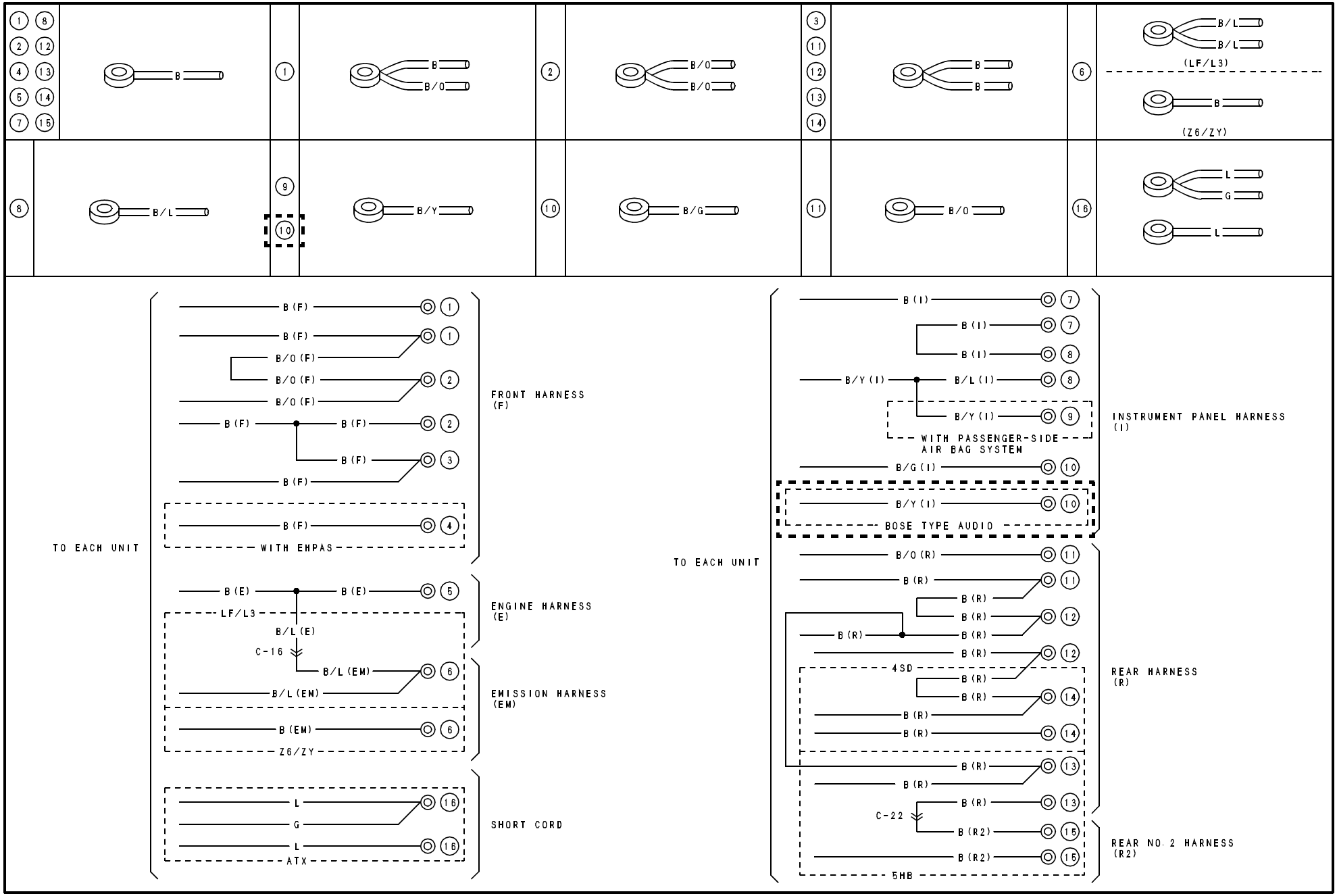

HARNESS SYMBOL : (F) (E) (R)

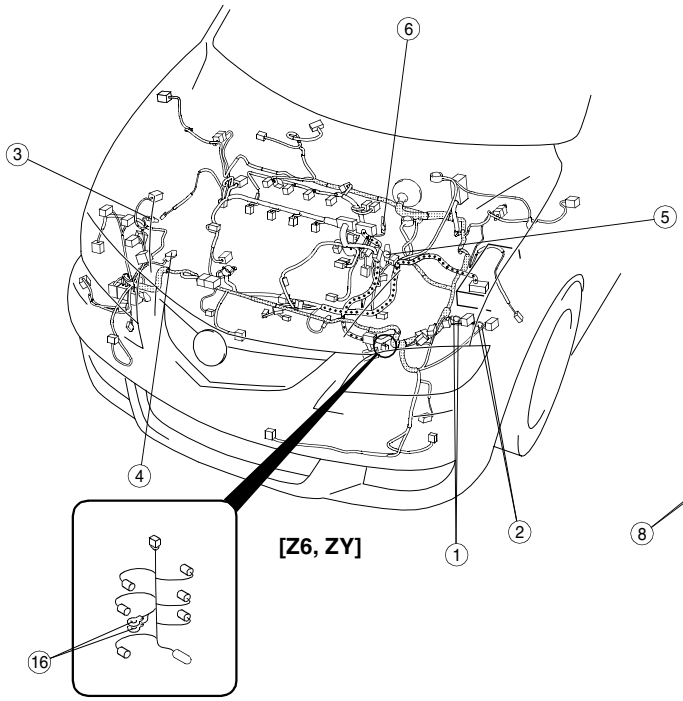

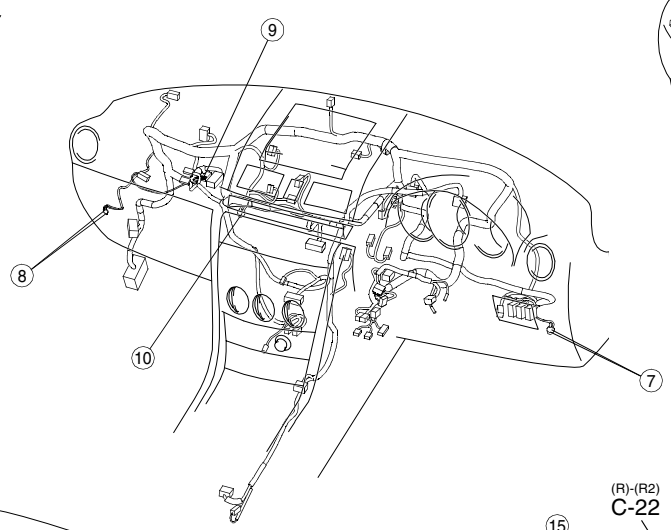

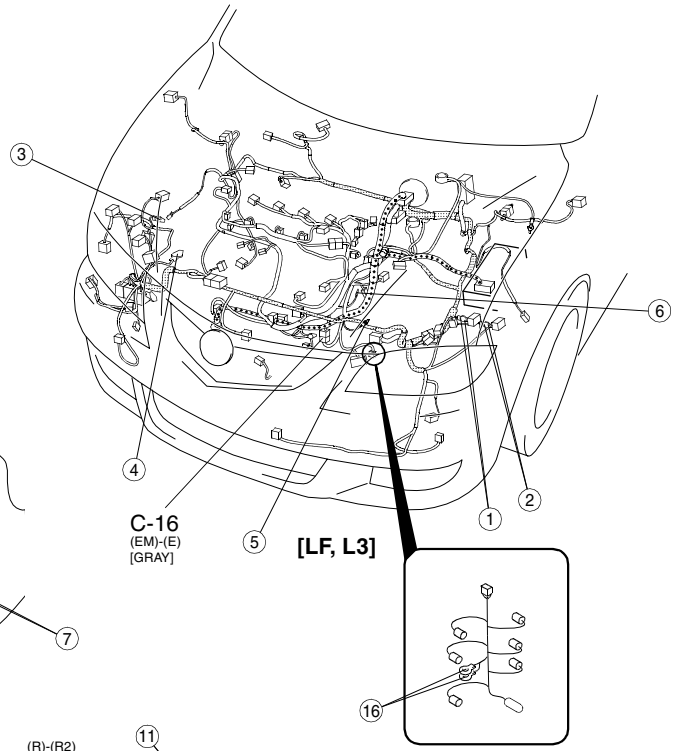

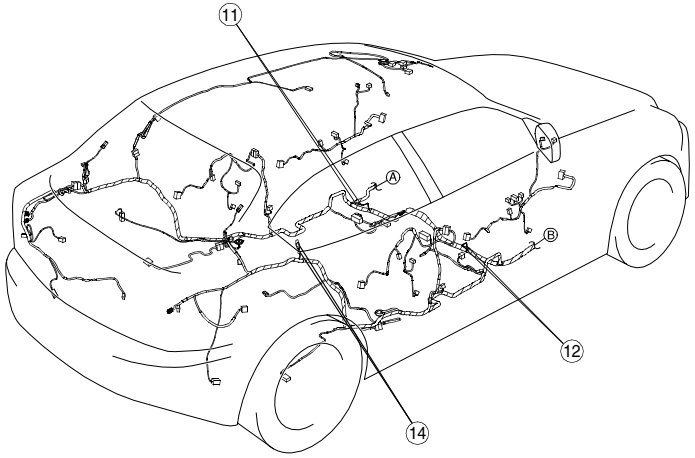

[4SD]

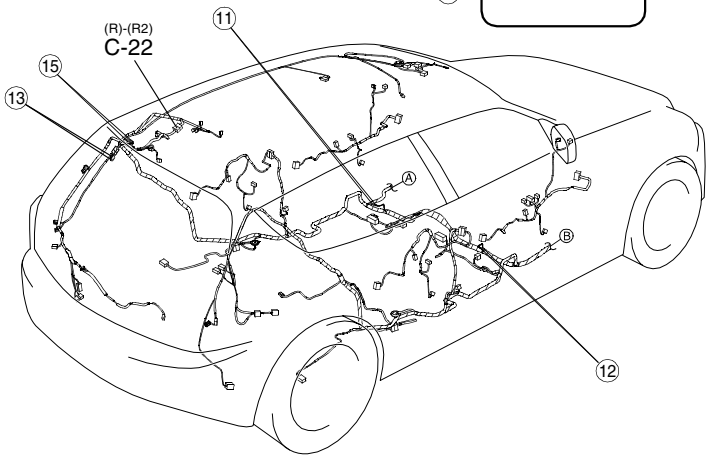

[5HB]

DATA LINK CONNECTOR

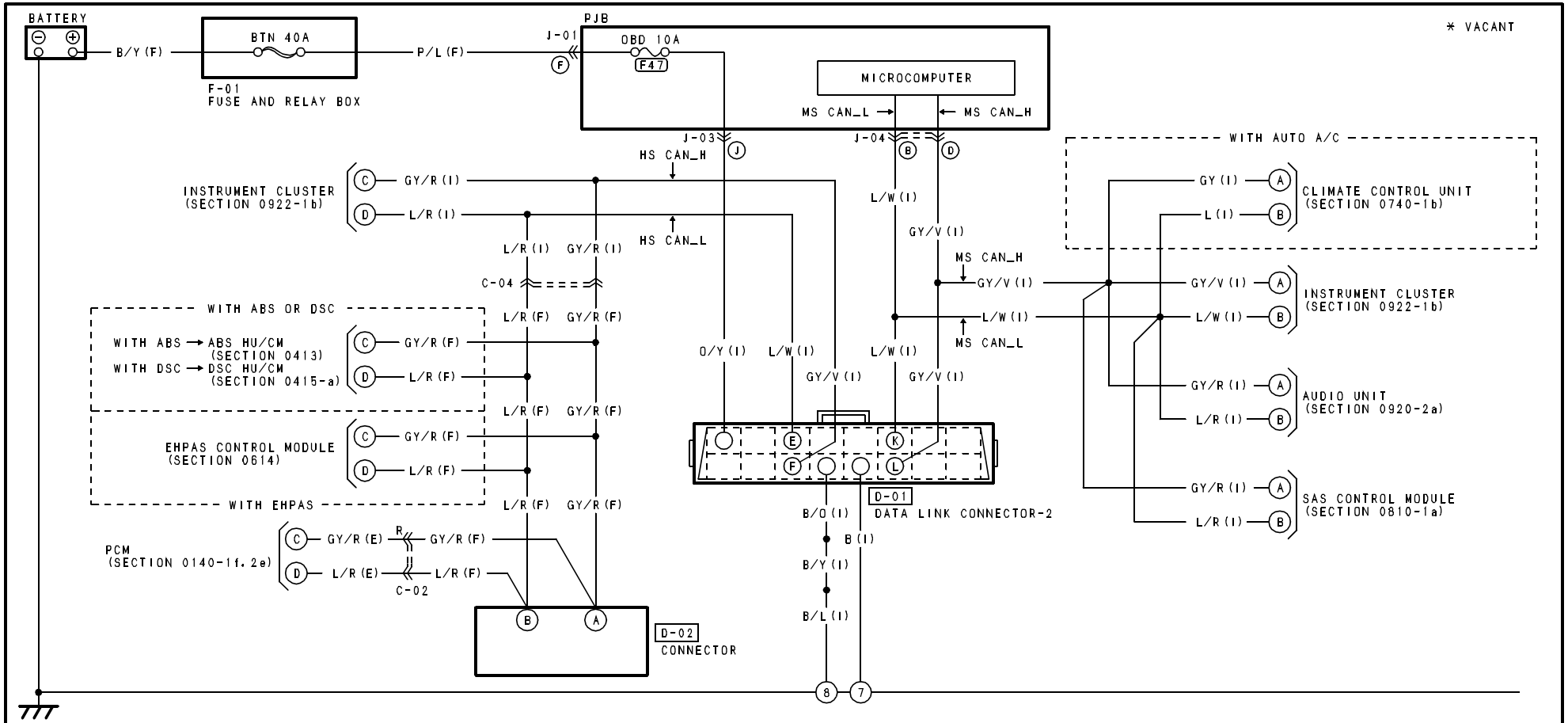

D-01
DATA LINK CONNECTOR-2 (I)

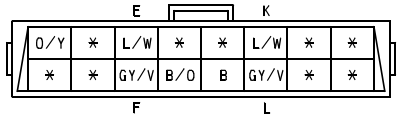

NOTE: SEEN FROM TERMINAL SIDE

D-02
CONNECTOR (F)

NOTE: Use this terminal at factory only, not used for inspection and repair at field

HARNESS SYMBOL : (F) (E) (R)

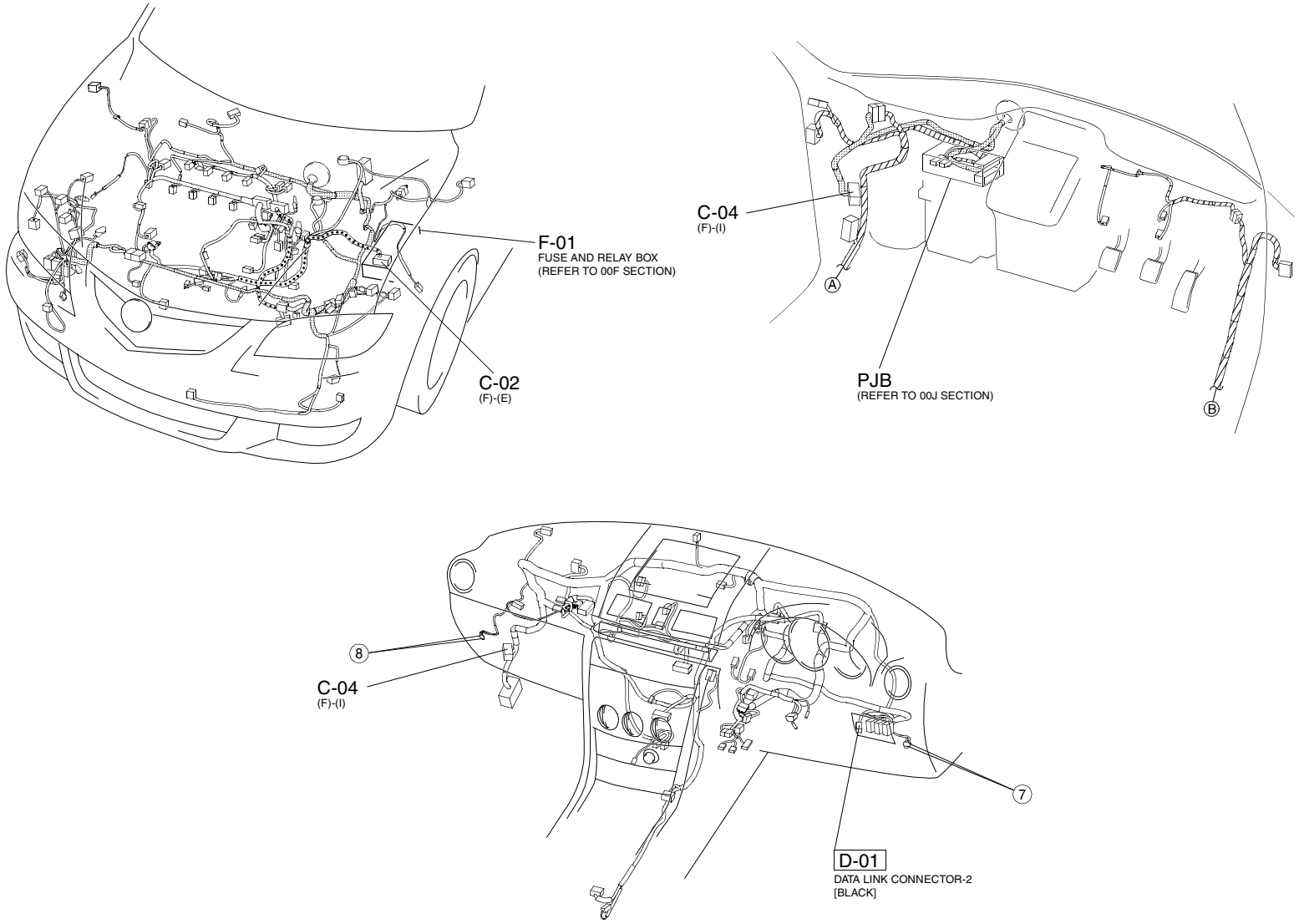

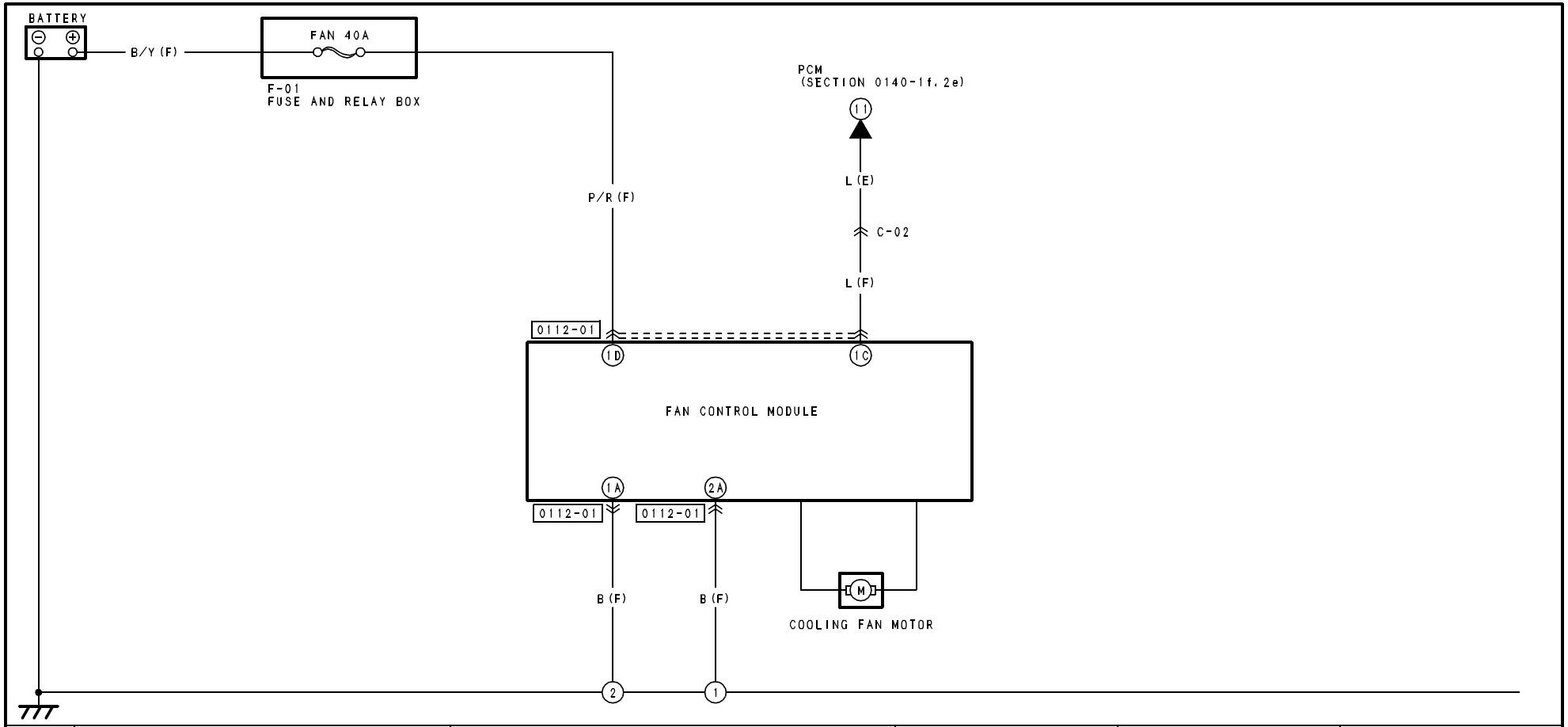

0112-01
FAN CONTROL MODULE (F)

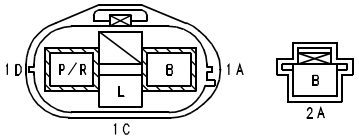

HARNESS SYMBOL : (F) (E) (R)

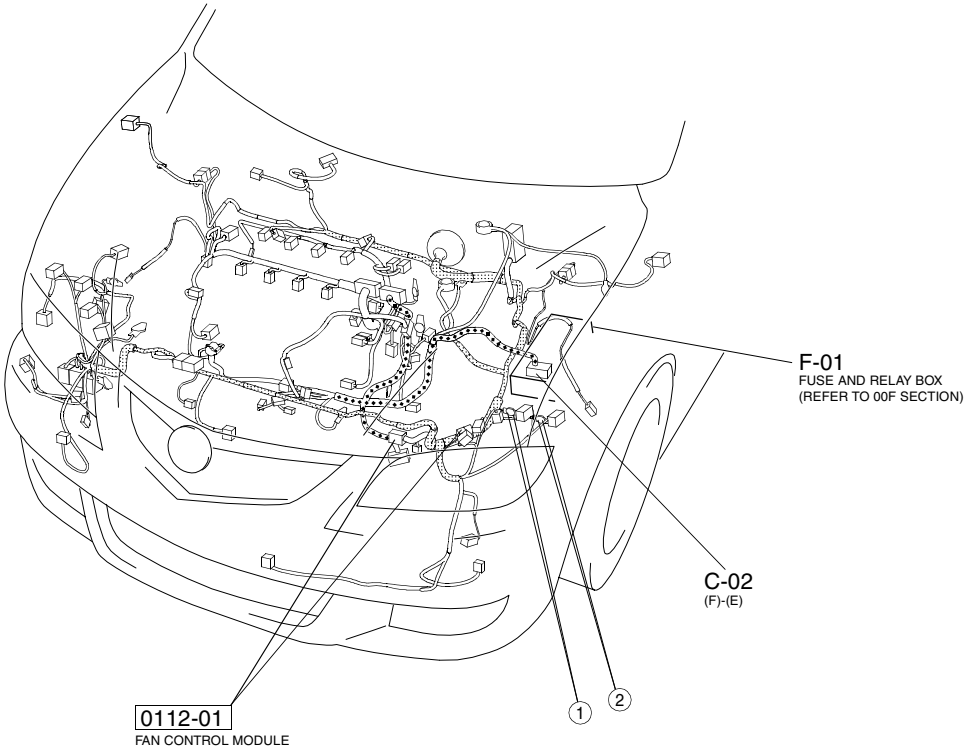

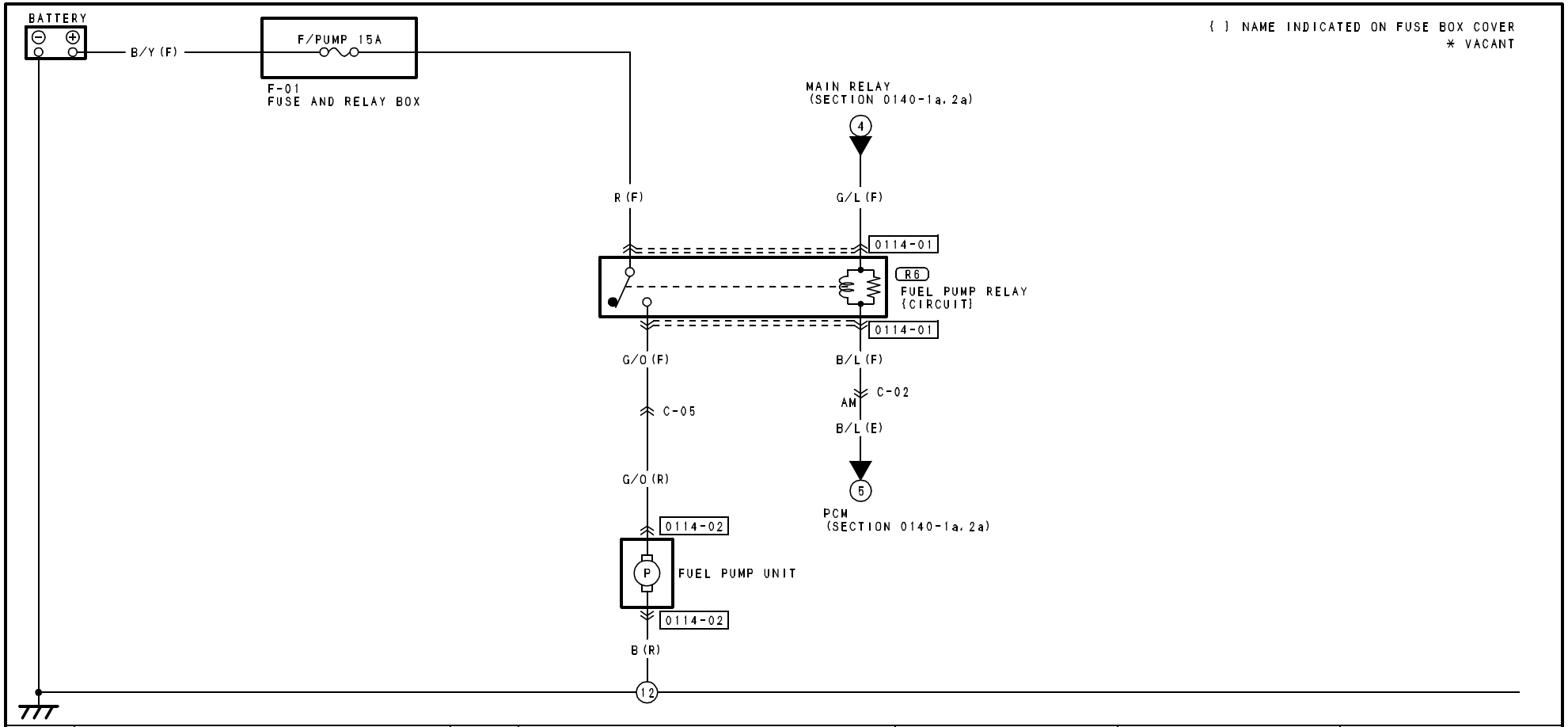

0114-01
FUEL PUMP RELAY (F)

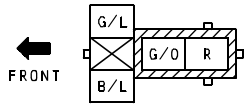

NOTE: SEEN FROM TERMINAL SIDE

0114-02
FUEL PUMP UNIT (R)

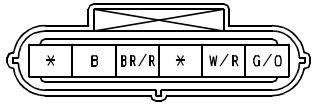

HARNESS SYMBOL : (F) (E) (R)

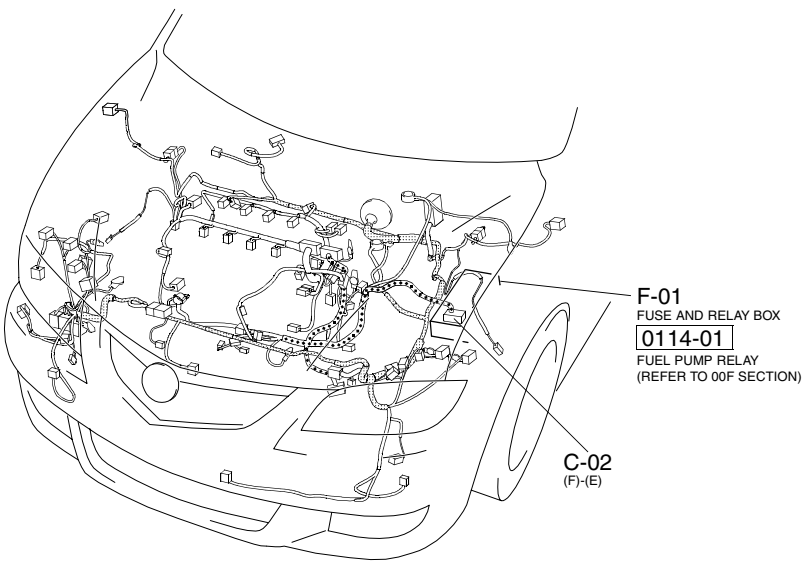

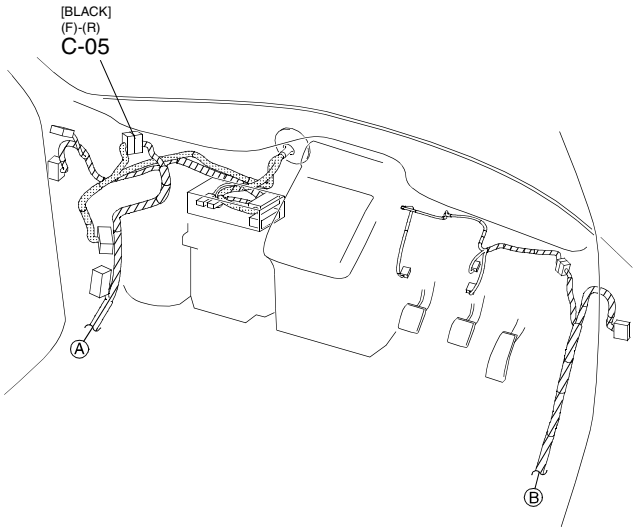

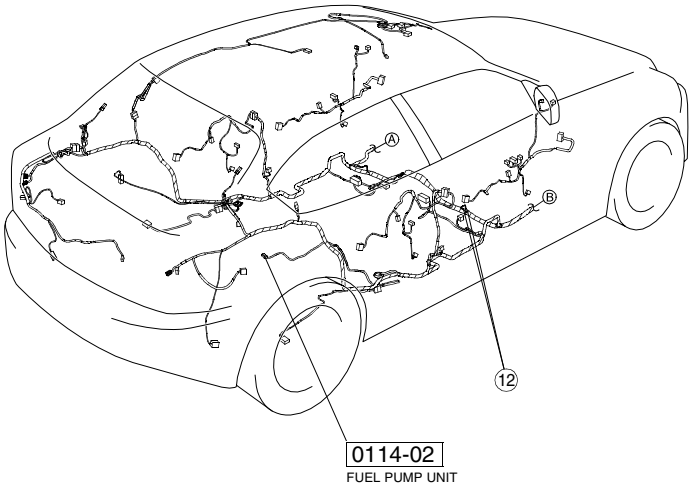

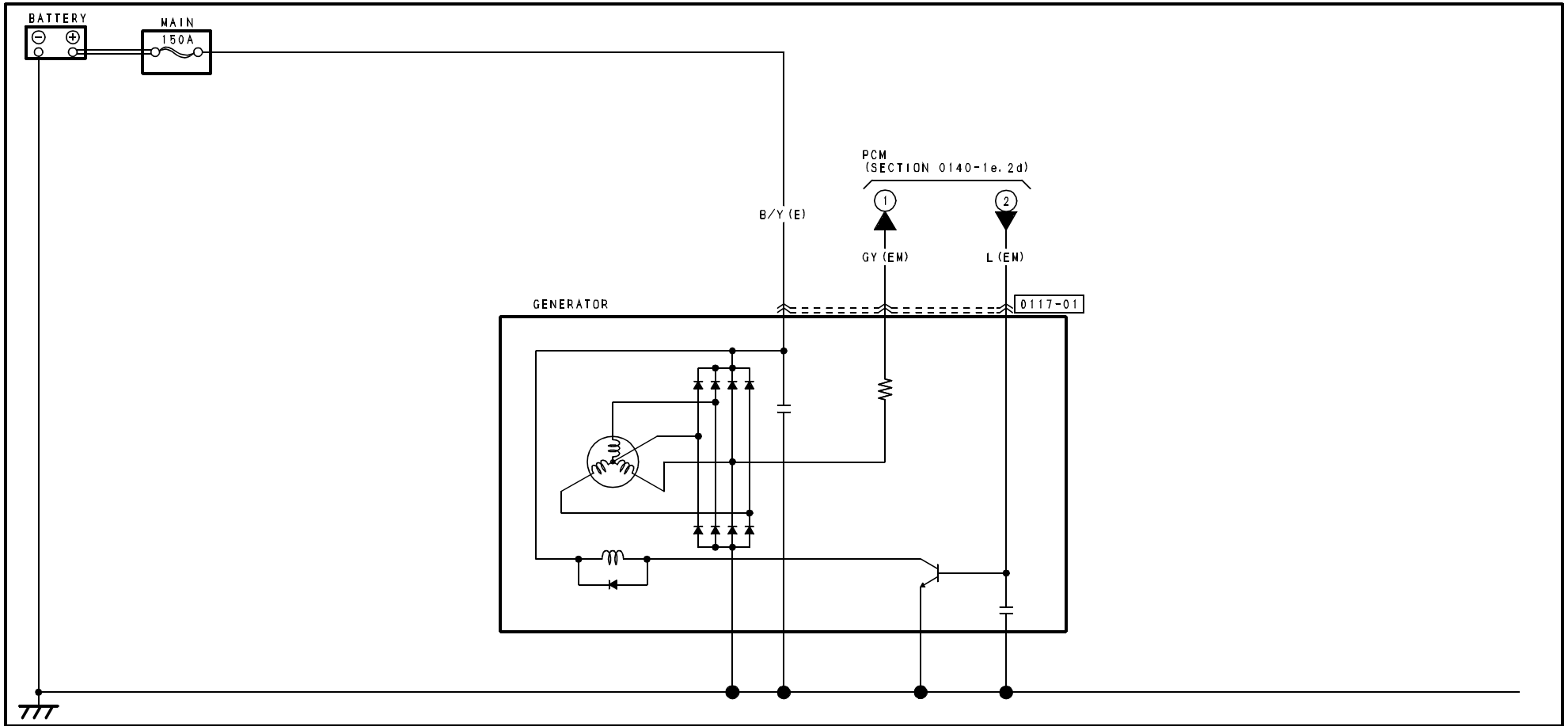

0117-01
GENERATOR

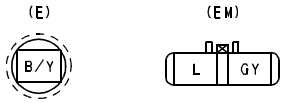

HARNESS SYMBOL : (F) (E) (R)

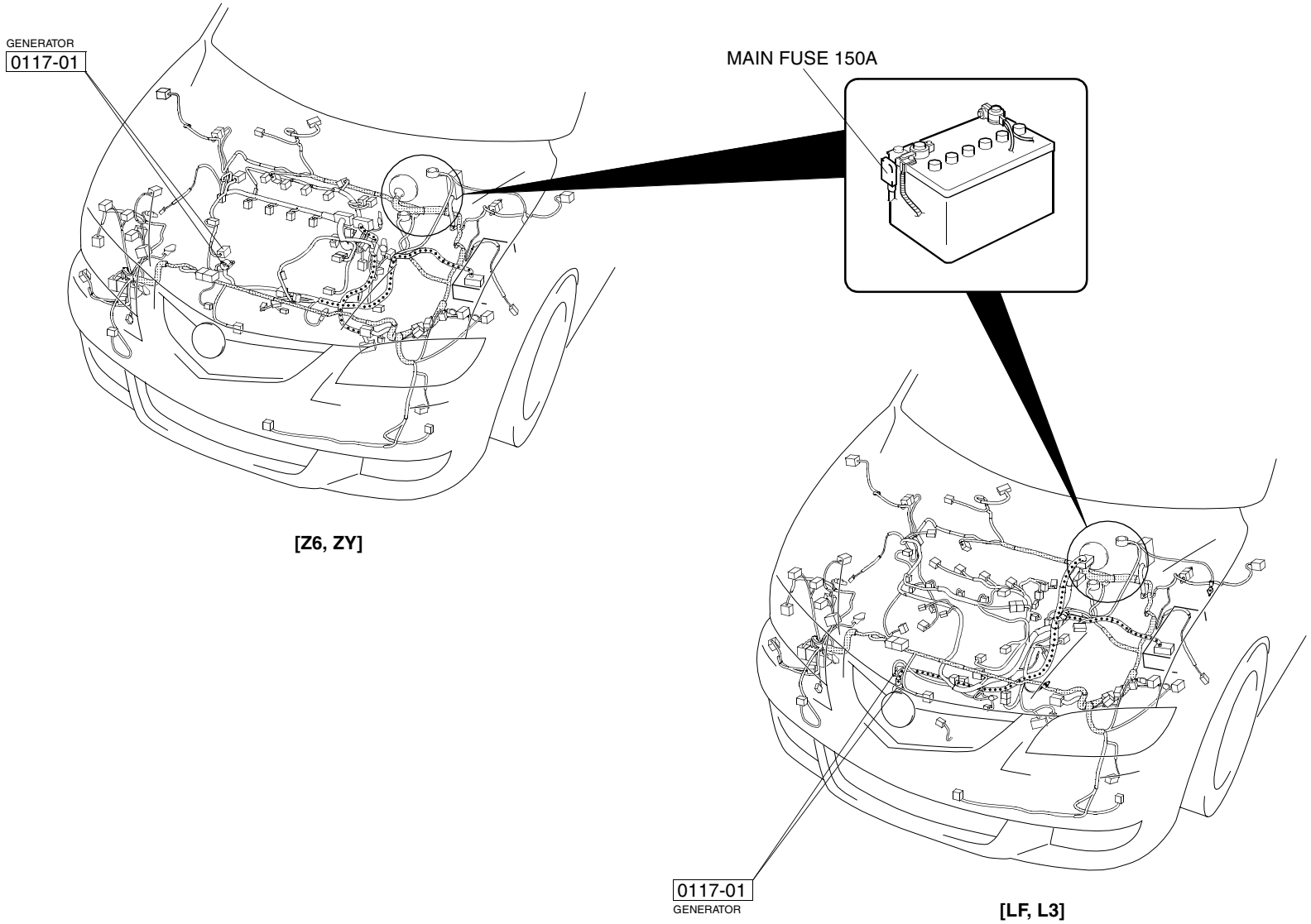

STARTING SYSTEM (ATX)

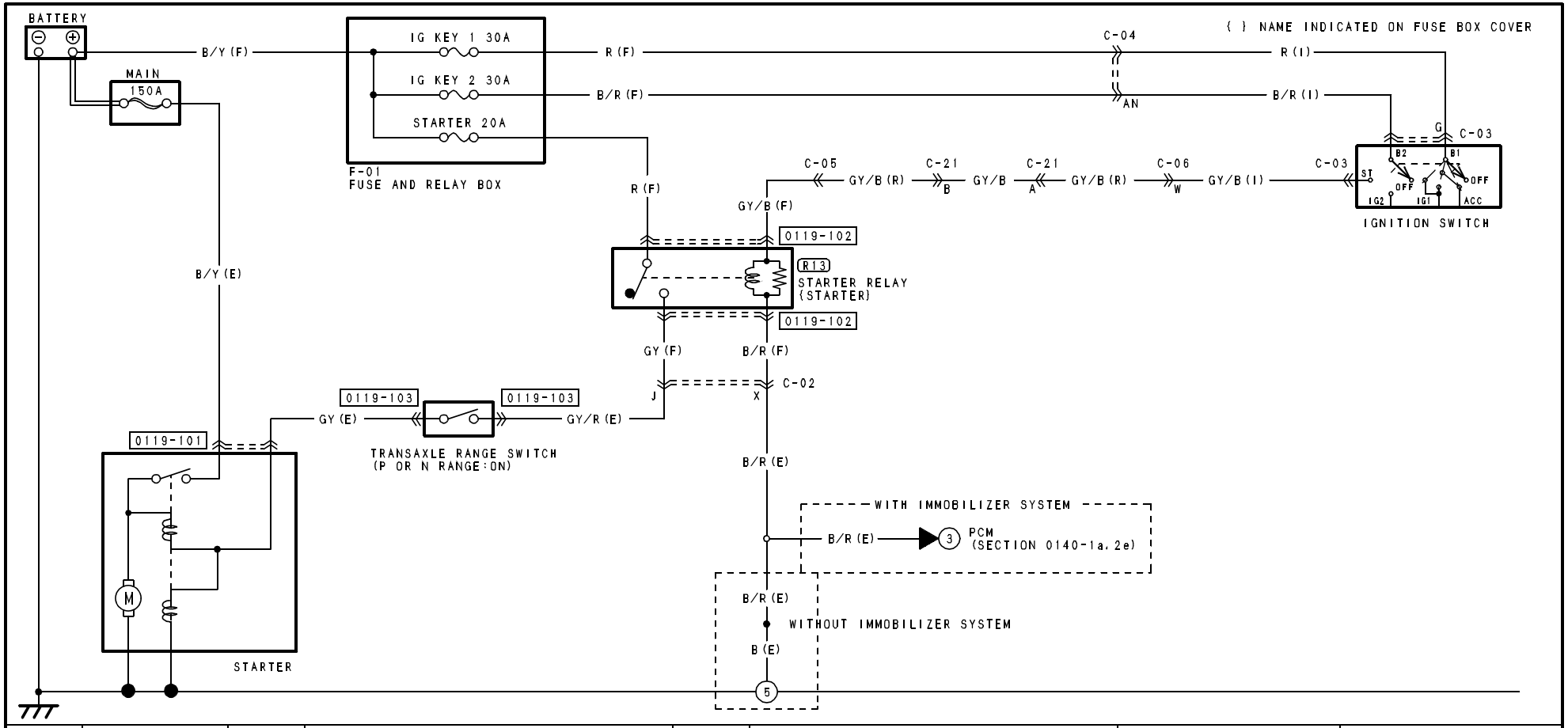

0119-101 STARTER (E)	0119-102 STARTER RELAY (F)	0119-103 TRANSAXLE RANGE SWITCH (E)
B/Y, GY	FRONT; GY/B, GY, R, B/R NOTE:SEEN FROM TERMINAL SIDE	GY/R, G/W, G/B, B/R, G/O, GY

HARNESS SYMBOL : (F) (E) (R)

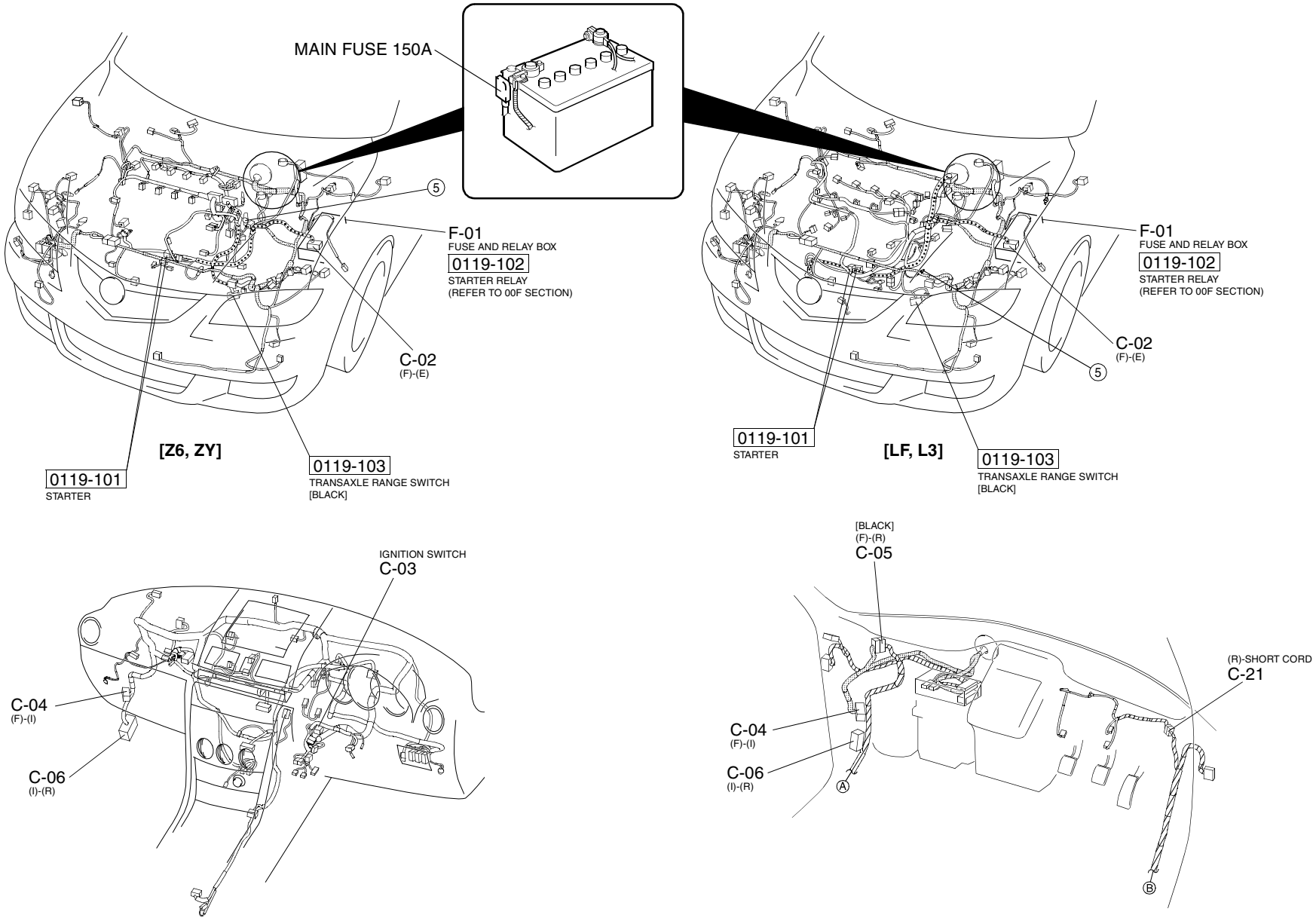

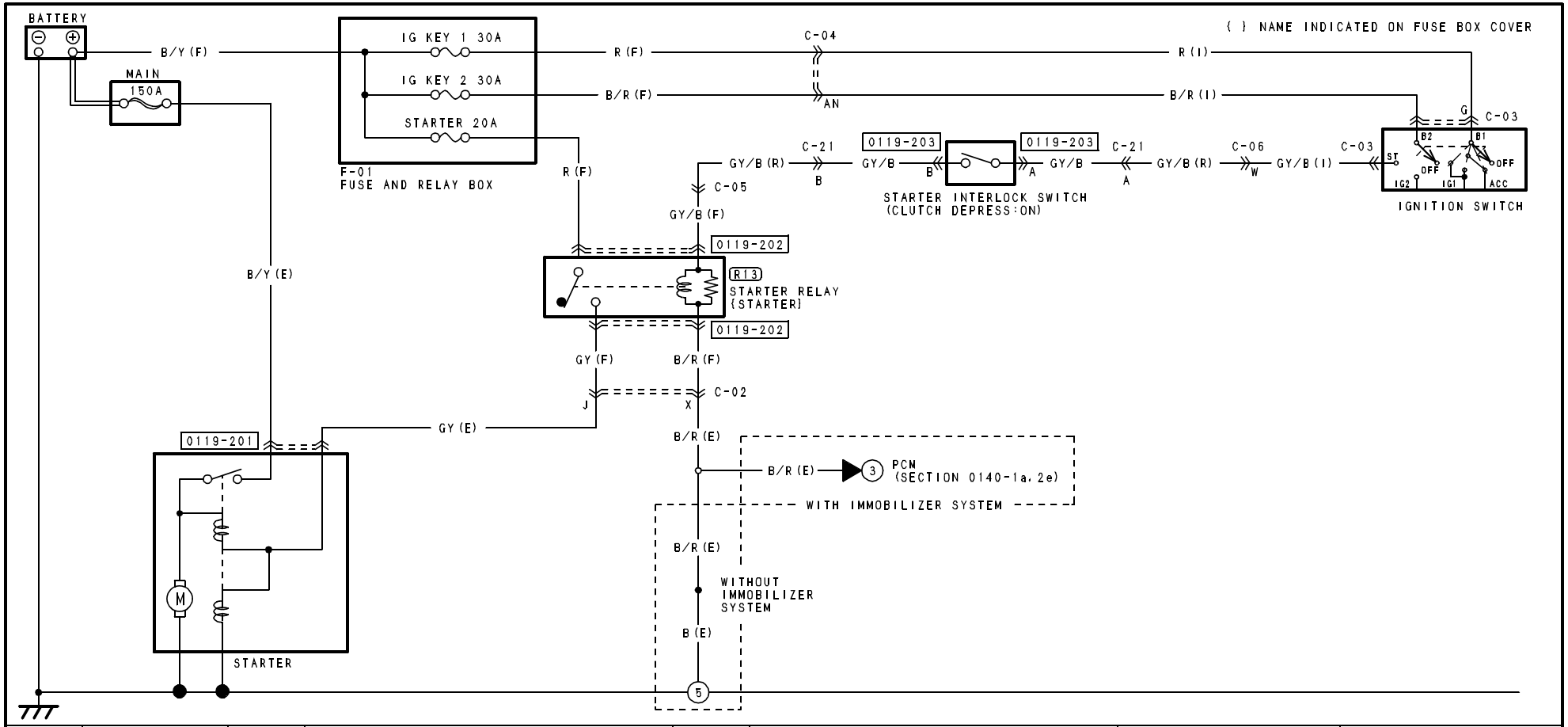

0119-201 STARTER (E)	0119-202 STARTER RELAY (F)		0119-203 STARTER INTERLOCK SWITCH (SHORT CORD)			
B/Y GY	FRONT GY/B GY R B/R NOTE: SEEN FROM TERMINAL SIDE		GY/B GY/B B A			

HARNESS SYMBOL : (F) (E) (R)

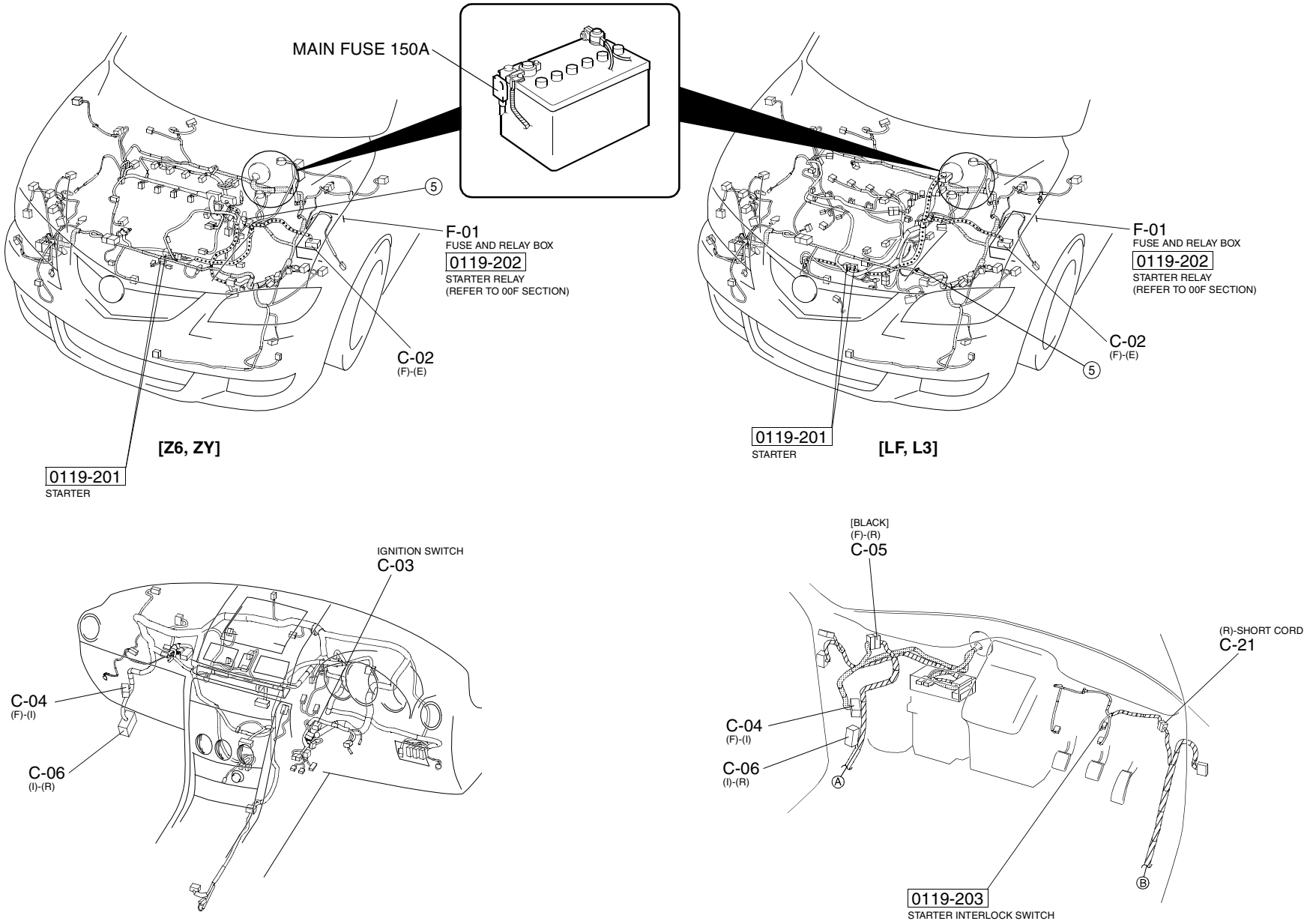

CONTROL SYSTEM (Z6/ZY:INCLUDES AUTOMATIC TRANSAXLE CONTROL INFORMATION)

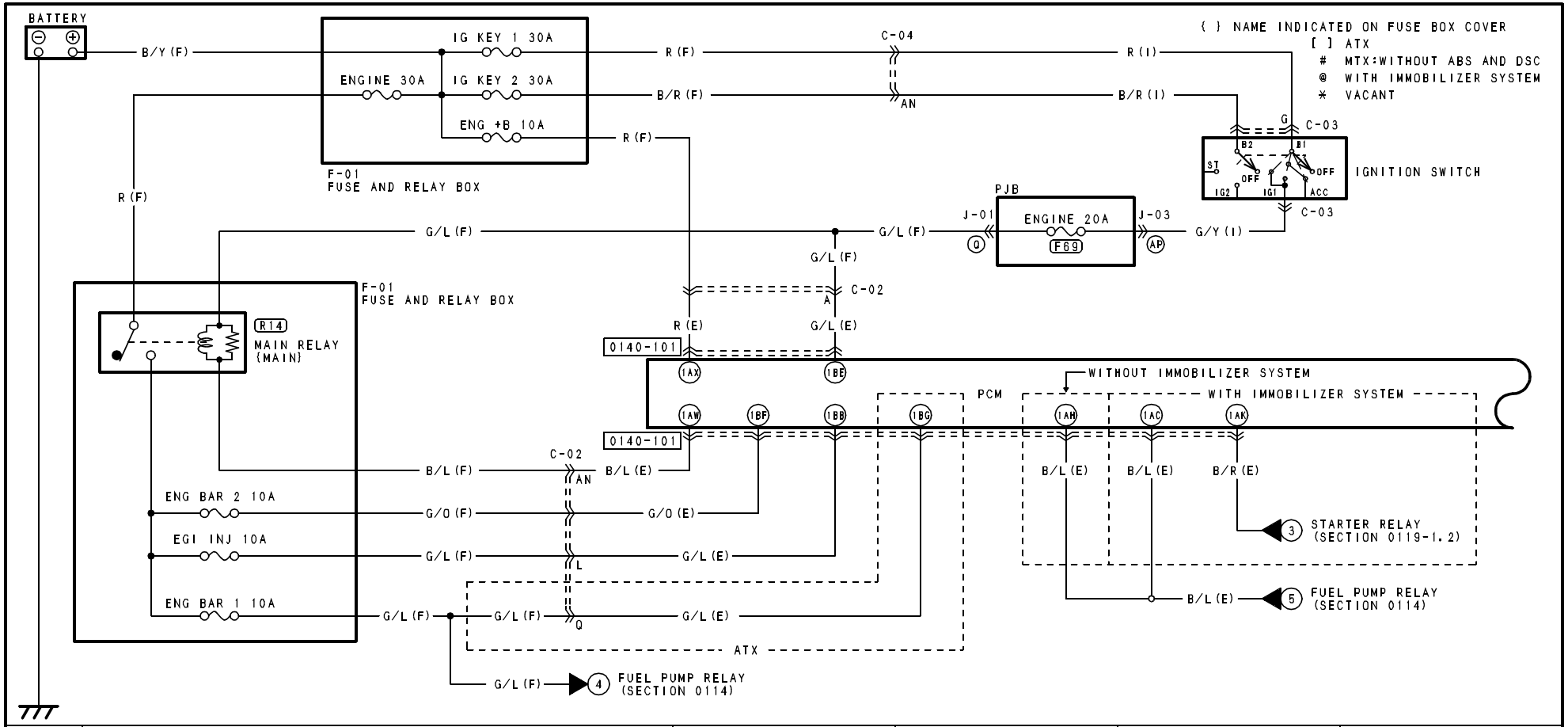

0140-101
PCM

(E)

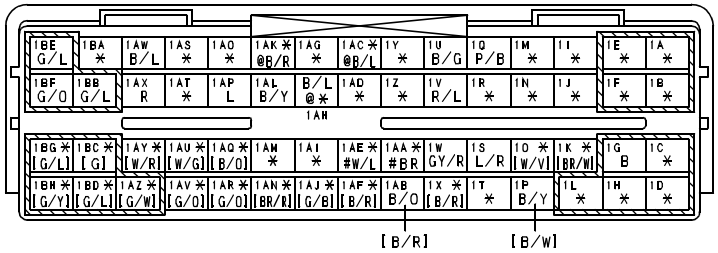

HARNESS SYMBOL : (F) (E) (R)

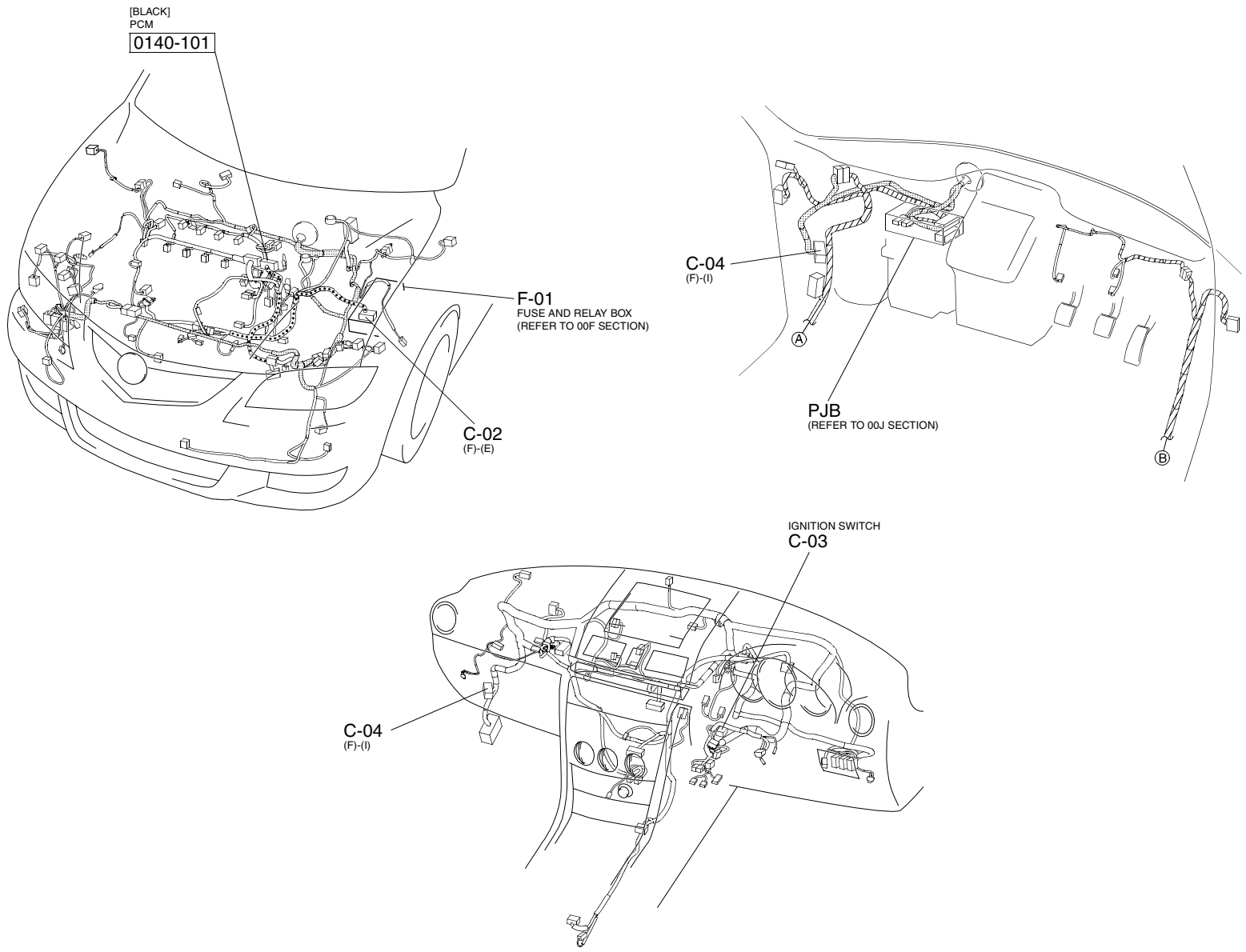

CONTROL SYSTEM (Z6/ZY:INCLUDES AUTOMATIC TRANSAXLE CONTROL INFORMATION)

< > ZY
* VACANT

FUEL INJECTOR NO. 1 — 0140-103
FUEL INJECTOR NO. 2 — 0140-104
FUEL INJECTOR NO. 3 — 0140-105
FUEL INJECTOR NO. 4 — 0140-106

B/W (EM) G/W (EM) B/Y (EM) G/Y (EM) B/L (EM) G/L (EM) B/O (EM) G/R (EM)

0140-101

2E 2B 2F 2C 2G 2D 2L 2H

PCM

2A 2Y 2U 2Q 2M 2BD 2BH 2AZ

0140-101

G/L (EM)

G/L (EM) R/B (EM) W (EM) R/W (EM) W/R (EM) R (EM) W/L (EM) R/L (EM) W/G (EM) B/R (EM) B (EM) B (EM)

0140-107 CONDENSER 0140-107

IGNITION COIL NO. 1 — 0140-108
IGNITION COIL NO. 2 — 0140-109
IGNITION COIL NO. 3 — 0140-110
IGNITION COIL NO. 4 — 0140-111

A C B

B/L (EM) B (EM) B/W (EM) B/R (EM) G (EM)

B/Y (EM)

B (EM)

6

0140-101
PCM
(EM)

2BE B/O	2BA W/B	2AW *	2AS G/Y	2AO B/W	2AK W/L	2AG BR/L	2AC * <Y>	2Y W	2U W/R	2Q W/L	2M W/G	2I *	2E B/W	2A G/L	
2BF B/R	2BB W/R	2AX BR	2AT B/G	2AP *	2AL *	2AH *	2AD *	2Z B/W	2V B/R	2R GY/B	2N B/Y	2J W	2F B/Y	2B G/W	
2BG G/L	2BC B/O	2AY BR/L	2AU W/R	2AQ W/L	2AM B/O	2AI W/L	2AE BR	2AA W	2W G/Y	2S W/V	2O *	2K W/G	2G B/L	2C G/Y	
2BH B	2BD B/R	2AZ B	2AV B/O	2AR GY	2AN L	2AJ B/R	2AF G/O	2AB BR	2X W	2T G/L	2P W/R	2L B/O	2H G/R	2D G/L	

0140-103
FUEL INJECTOR NO. 1 (EM)

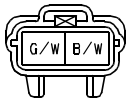

0140-104
FUEL INJECTOR NO. 2 (EM)

0140-105
FUEL INJECTOR NO. 3 (EM)

0140-106
FUEL INJECTOR NO. 4 (EM)

0140-107
CONDENSER (EM)

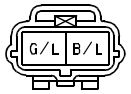

0140-108
IGNITION COIL NO. 1 (EM)

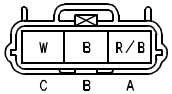

0140-109
IGNITION COIL NO. 2 (EM)

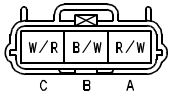

0140-110
IGNITION COIL NO. 3 (EM)

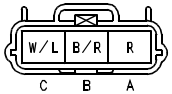

0140-111
IGNITION COIL NO. 4 (EM)

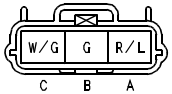

HARNESS SYMBOL : (F) (E) (R)

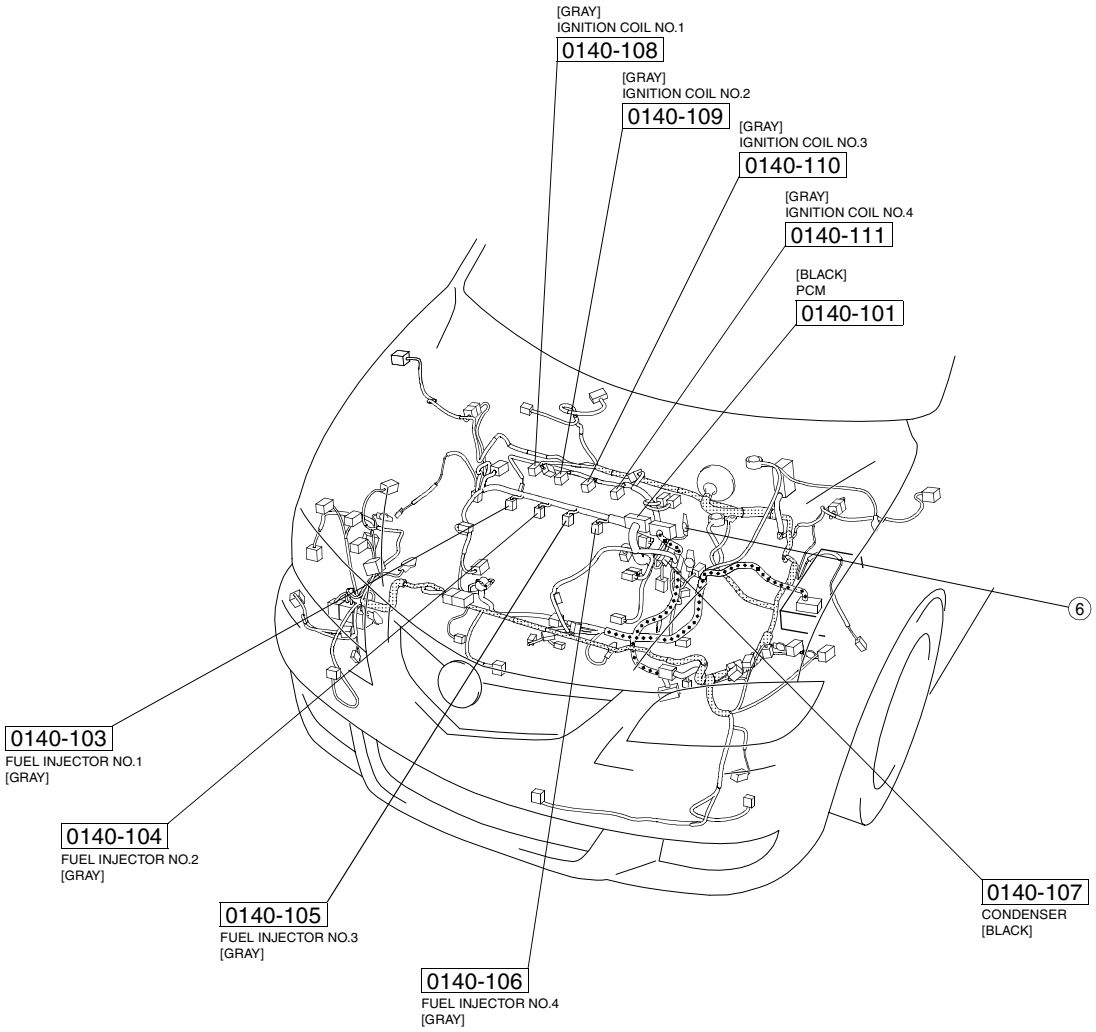

CONTROL SYSTEM (Z6/ZY:INCLUDES AUTOMATIC TRANSAXLE CONTROL INFORMATION)

< > ZY
* VACANT

OIL CONTROL VALVE
0140-112
W/L (EM)
BR/L (EM)

IDLE AIR CONTROL VALVE
0140-113
W (EM)
BR (EM)

VARIABLE INTAKE-AIR SHUTTER VALVE ACTUATOR
0140-114
B/W (EM)
G/Y (EM)

VARIABLE TUMBLE SHUTTER VALVE ACTUATOR
0140-115
B/R (EM)
G/O (EM)

0140-101
2AK 2AG 2X 2AB 2AO 2AS 2AJ 2AF
PCM
2P 2BB 2BF 2T 2AV
0140-101

B/R (EM)
G/L (EM)
B/O (EM)
0140-118
PURGE SOLENOID VALVE
0140-118
G/L (EM)

G/L (EM) W/R (EM) B/L (EM)
0140-116
CRANKSHAFT POSITION SENSOR

G/L (EM) W/R (EM) B/L (EM)
0140-117
CAMSHAFT POSITION SENSOR

G/R (EM) — 9
G/B (EM) — 10
HEATED OXYGEN SENSOR (SECTION 0140-1d)

0140-101
PCM
(EM)

2BE B/O	2BA W/B	2AW *	2AS G/Y	2AO B/W	2AK W/L	2AG BR/L	2AC * <Y>	2Y W	2U W/R	2Q W/L	2M W/G	2I *	2E B/W	2A G/L	
2BF B/R	2BB W/R	2AX BR	2AT B/G	2AP *	2AL *	2AH *	2AD *	2Z B/W	2V B/R	2R GY/B	2N B/Y	2J W	2F B/Y	2B G/W	
2BG G/L	2BC B/O	2AY BR/L	2AU W/R	2AQ W/L	2AM B/O	2AI W/L	2AE BR	2AA W	2W G/Y	2S W/V	2O *	2K W/G	2G B/L	2C G/Y	
2BH B	2BD B/R	2AZ B	2AV B/O	2AR GY	2AN L	2AJ B/R	2AF G/O	2AB BR	2X W	2T G/L	2P W/R	2L B/O	2H G/R	2D G/L	

0140-112
OIL CONTROL VALVE (EM)
BR/L W/L

0140-113
IDLE AIR CONTROL VALVE (EM)
BR W

0140-114
VARIABLE INTAKE-AIR SHUTTER VALVE ACTUATOR (EM)
G/Y B/W

0140-115
VARIABLE TUMBLE SHUTTER VALVE ACTUATOR (EM)
G/O B/R

0140-116
CRANKSHAFT POSITION SENSOR (EM)
B/L W/R G/L

0140-117
CAMSHAFT POSITION SENSOR (EM)
B/L W/R G/L

0140-118
PURGE SOLENOID VALVE (EM)
B/O G/L

HARNESS SYMBOL : (F) (E) (R)

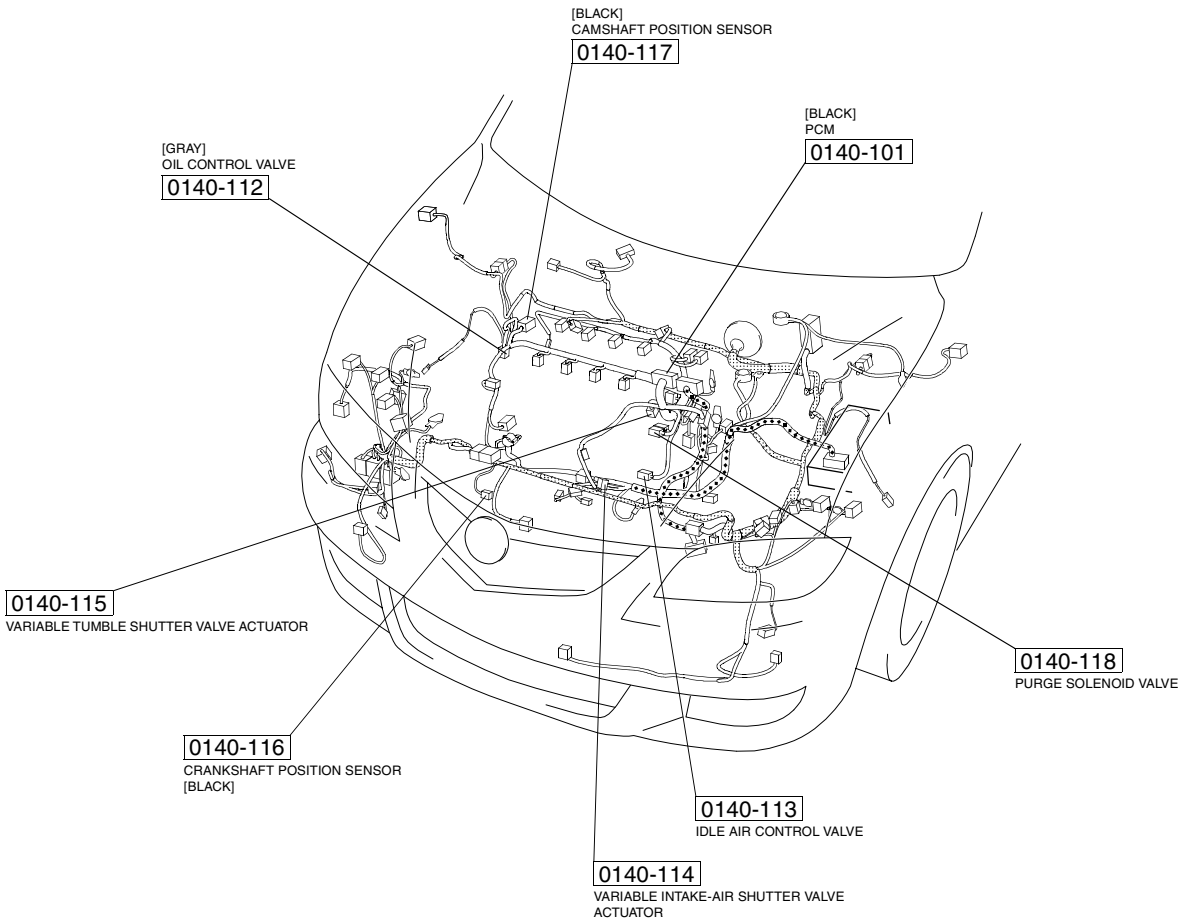

CONTROL SYSTEM (Z6/ZY:INCLUDES AUTOMATIC TRANSAXLE CONTROL INFORMATION)

< > ZY
* VACANT

THROTTLE POSITION SENSOR
0140-119
G/Y (EM) W (EM) BR (EM)

BAROMETRIC PRESSURE SENSOR
C B A
0140-120
G/W (EM) W/V (EM) BR/W (EM)

G/Y (EM)
0140-101
2W 2AA 2AE 2S
CONSTANT VOLTAGE (Vref)
PCM
SENSOR GROUND
2AM 2AI 2BE 2AT 2K 2AX 2J
0140-101
B/O (EM)
SHIELD WIRE
SHIELD WIRE
B/O (EM) W/L (EM) B/G (EM) W/G (EM)
W (EM)
0140-123
BR (EM)
ENGINE COOLANT TEMPERATURE SENSOR
0140-123
BR (EM)
0140-121
FRONT HEATED OXYGEN SENSOR
0140-121
0140-122
REAR HEATED OXYGEN SENSOR
0140-122
PCM (SECTION 0140-1c)
9 G/R (EM)
10 G/B (EM)
BR/L (EM)
BR/G (EM)

0140-101
PCM
(EM)

2BE B/O	2BA W/B	2AW *	2AS G/Y	2AO B/W	2AK W/L	2AG BR/L	2AC * <Y>	2Y W	2U W/R	2Q W/L	2M W/G	2I *	2E B/W	2A G/L	
2BF B/R	2BB W/R	2AX BR	2AT B/G	2AP *	2AL *	2AH *	2AD *	2Z B/W	2V B/R	2R GY/B	2N B/Y	2J W	2F B/Y	2B G/W	
2BG G/L	2BC B/O	2AY BR/L	2AU W/R	2AQ W/L	2AM B/O	2AI W/L	2AE BR	2AA W	2W G/Y	2S W/V	2O *	2K W/G	2G B/L	2C G/Y	
2BH B	2BD B/R	2AZ B	2AV B/O	2AR GY	2AN L	2AJ B/R	2AF G/O	2AB BR	2X W	2T G/L	2P W/R	2L B/O	2H G/R	2D G/L	

0140-119
THROTTLE POSITION SENSOR (EM)

W	BR	G/Y

0140-120
BAROMETRIC PRESSURE SENSOR (EM)

G/W	W/V	BR/W

C B A

0140-121
FRONT HEATED OXYGEN SENSOR (EM)

W/L	G/R
BR/L	B/O

0140-122
REAR HEATED OXYGEN SENSOR (EM)

W/G	G/B
BR/G	B/G

0140-123
ENGINE COOLANT TEMPERATURE SENSOR (EM)

BR	W

HARNESS SYMBOL : (F) (E) (R)

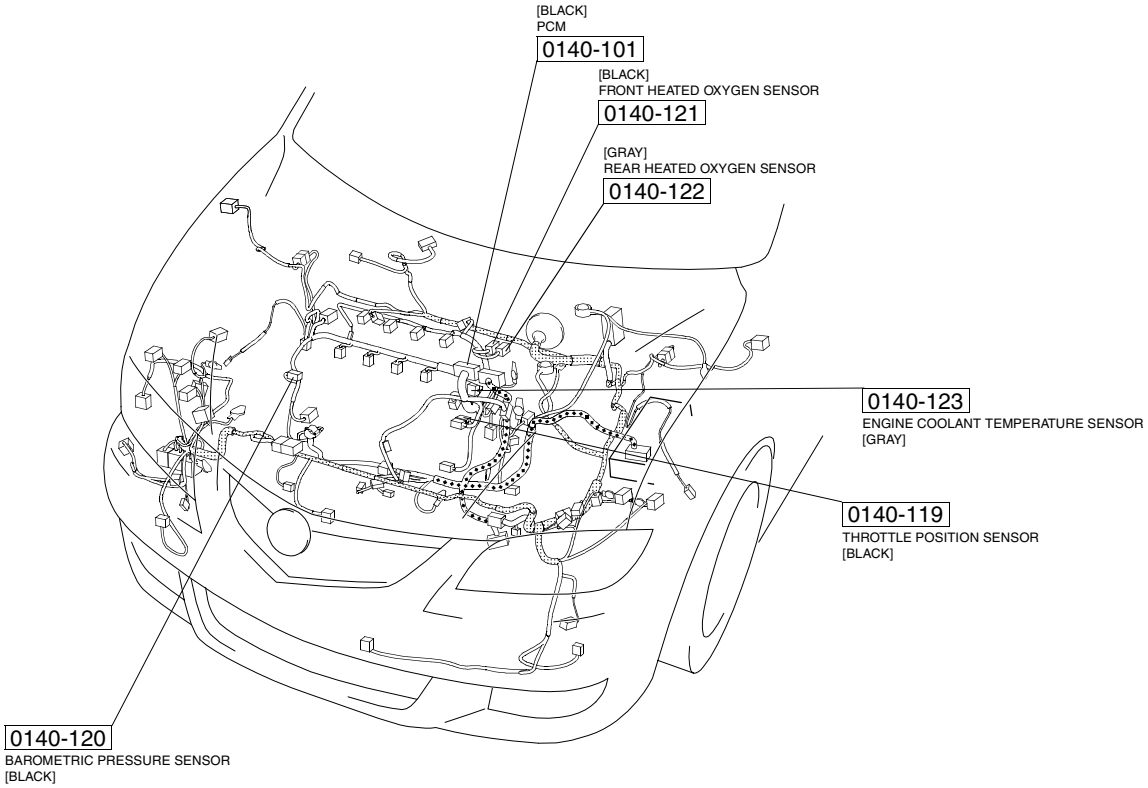

< > ZY
* VACANT

GENERATOR
(SECTION 0117)

1 — GY (EM)
2 — L (EM)

0140-101

2AR — 2AN

PCM

2BG — 2Z — 2V — 2R — 2N — 2AU — 2BC — 2AQ — 2AY — 2BA — 2AC

0140-101

G/L (EM)

B/W (EM) — B/R (EM) — GY/B (EM) — B/Y (EM)

0140-124

0140-124 — EGR VALVE

L (EM) — G (EM)

W/R (EM) — B/O (EM) — W/L (EM) — BR/L (EM)

0140-125

C — B — D — E

MASS AIR FLOW/INTAKE AIR
TEMPERATURE SENSOR

A

0140-125

G/L (EM)

W/B (EM)

0140-126

KNOCK SENSOR

Y (EM)

0140-127

POWER STEERING
PRESSURE SWITCH

ZY

0140-101
PCM

(EM)

2BE B/O	2BA W/B	2AW *	2AS G/Y	2AO B/W	2AK W/L	2AG BR/L	2AC * <Y>	2Y W	2U W/R	2Q W/L	2M W/G	2I *	2E B/W	2A G/L	
2BF B/R	2BB W/R	2AX BR	2AT B/G	2AP *	2AL *	2AH *	2AD *	2Z B/W	2V B/R	2R GY/B	2N B/Y	2J W	2F B/Y	2B G/W	
2BG G/L	2BC B/O	2AY BR/L	2AU W/R	2AQ W/L	2AM B/O	2AI W/L	2AE BR	2AA W	2W G/Y	2S W/V	2O *	2K W/G	2G B/L	2C G/Y	
2BH B	2BD B/R	2AZ B	2AV B/O	2AR GY	2AN L	2AJ B/R	2AF G/O	2AB BR	2X W	2T G/L	2P W/R	2L B/O	2H G/R	2D G/L	

0140-124
EGR VALVE (EM)

B/W	L	B/R
B/Y	G	GY/B

0140-125
MASS AIR FLOW/INTAKE AIR TEMPERATURE SENSOR (EM)

BR/L	W/L	W/R	B/O	G/L
E	D	C	B	A

0140-126
KNOCK SENSOR (EM)

W/B

0140-127
POWER STEERING PRESSURE SWITCH (EM)

Y

(ZY)

HARNESS SYMBOL : (F) (E) (R)

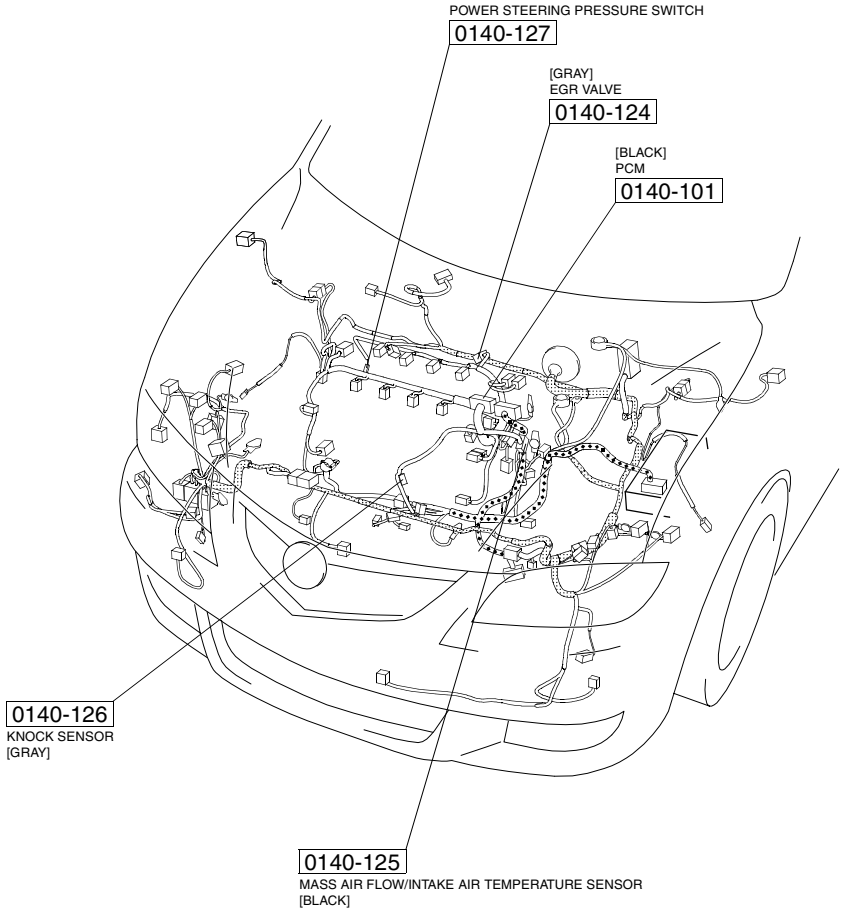

[ ] ATX
MTX:WITHOUT ABS AND DSC
@ WITH IMMOBILIZER SYSTEM
* VACANT

A/C RELAY (SECTION 0740-3) — 13 — B/Y (E)

REFRIGERANT PRESSURE SWITCH (SECTION 0740-1b, 2b) — 14 — P/B (E); 15 — B/G (E)

FAN CONTROL MODULE (SECTION 0112) — 11 — L (E)

DATA LINK CONNECTOR-2 (SECTION 00D) — C — GY/R (E); D — L/R (E)

BRAKE SWITCH (SECTION 0918-6) — 12 — R/L (E)

0140-101

1AL, 1Q, 1U, 1AP, HS CAN_H → 1W, 1S ← HS CAN_L, 1V

PCM

1G, 1AB, 1P, 1AA, 1AE

0140-101

B (E)

B/O (E)

A — 0140-128 — NEUTRAL SWITCH — B — 0140-128

B/O (E)

B/Y (E) — Z — C-02 — B/Y (F) — C-05

B/Y (R) — C-21 — G — B/Y

A — 0140-129 — CLUTCH PEDAL POSITION SWITCH — B — 0140-129

B/Y (R) — H — B/Y

B (R)

BR (E) W/L (E)

0140-130 — VEHICLE SPEED SENSOR

WITHOUT ABS AND DSC

B (E)

5, 11

MTX

0140-101
PCM

(E)

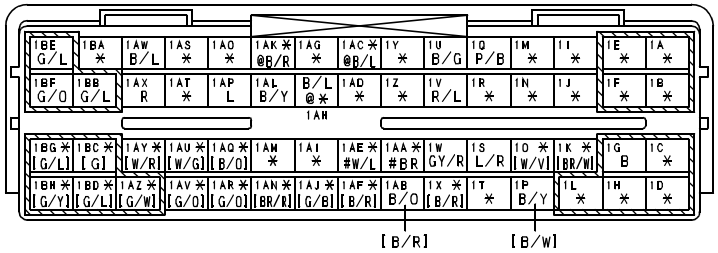

0140-128
NEUTRAL SWITCH (E)

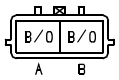

(MTX)

0140-129
CLUTCH PEDAL POSITION SWITCH (SHORT CORD)

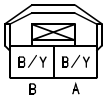

(MTX)

0140-130
VEHICLE SPEED SENSOR (E)

(MTX:WITHOUT ABS AND DSC)

HARNESS SYMBOL : (F) (E) (R)

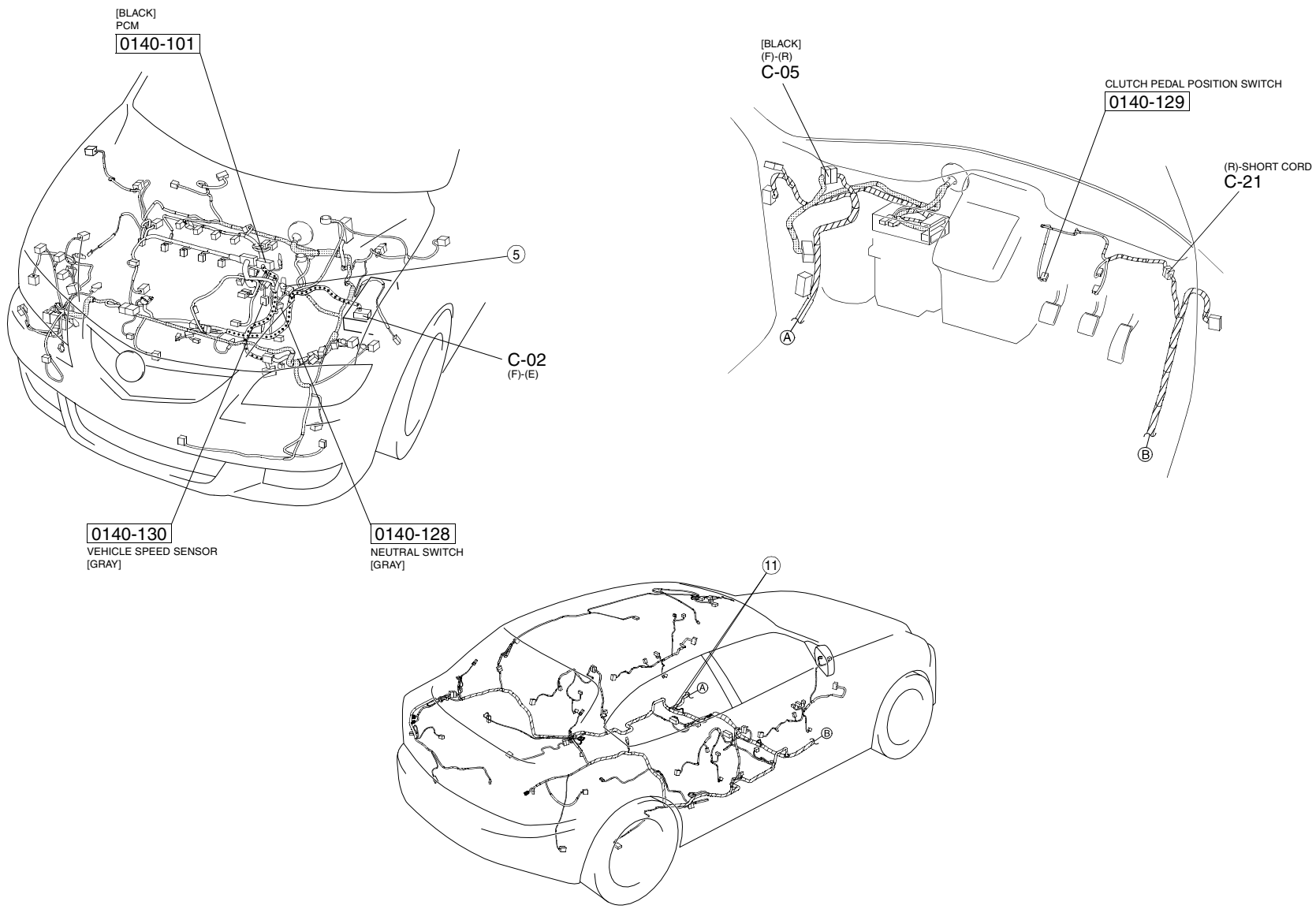

CONTROL SYSTEM (Z6/ZY:INCLUDES AUTOMATIC TRANSAXLE CONTROL INFORMATION)

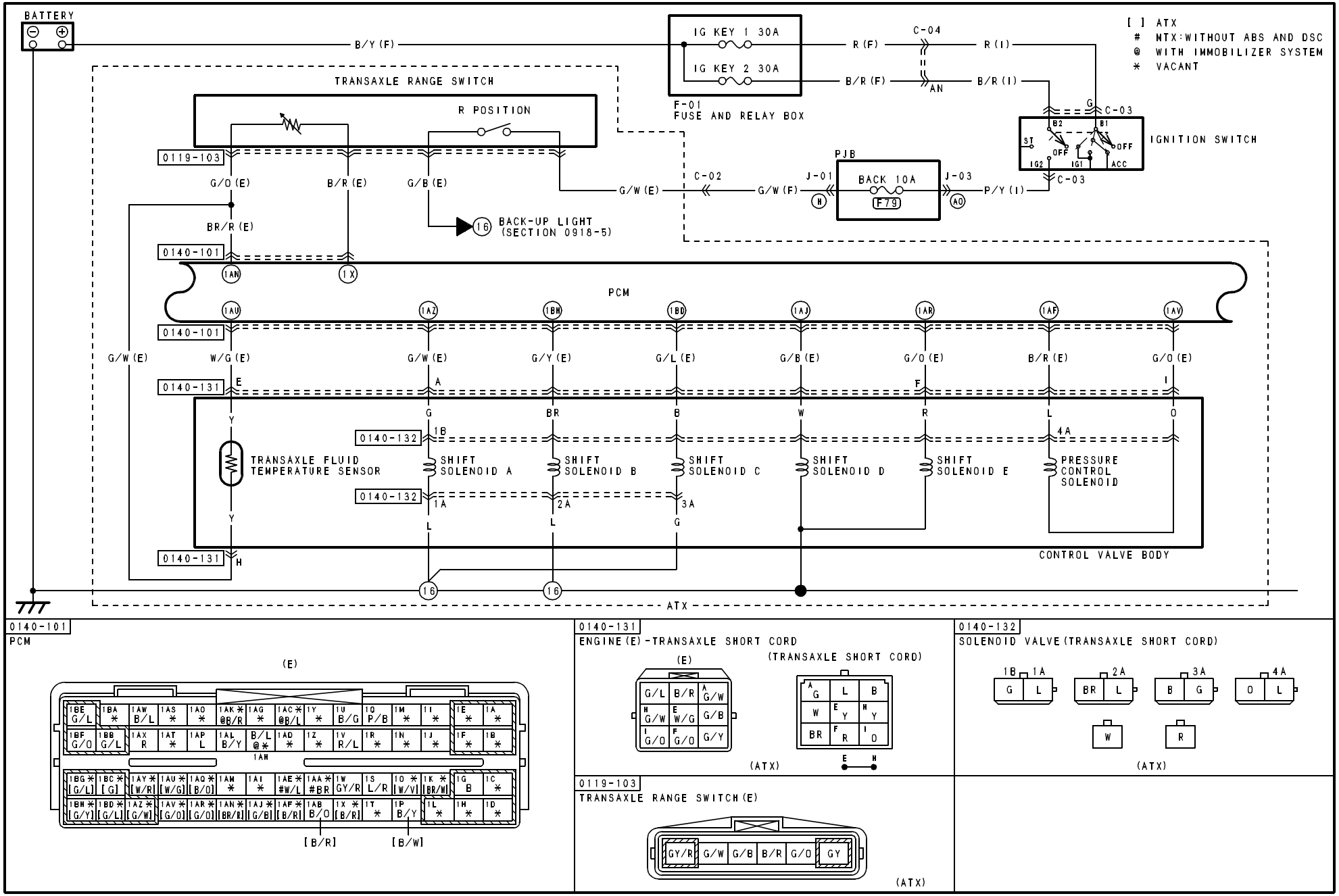

HARNESS SYMBOL : (F) (E) (R)

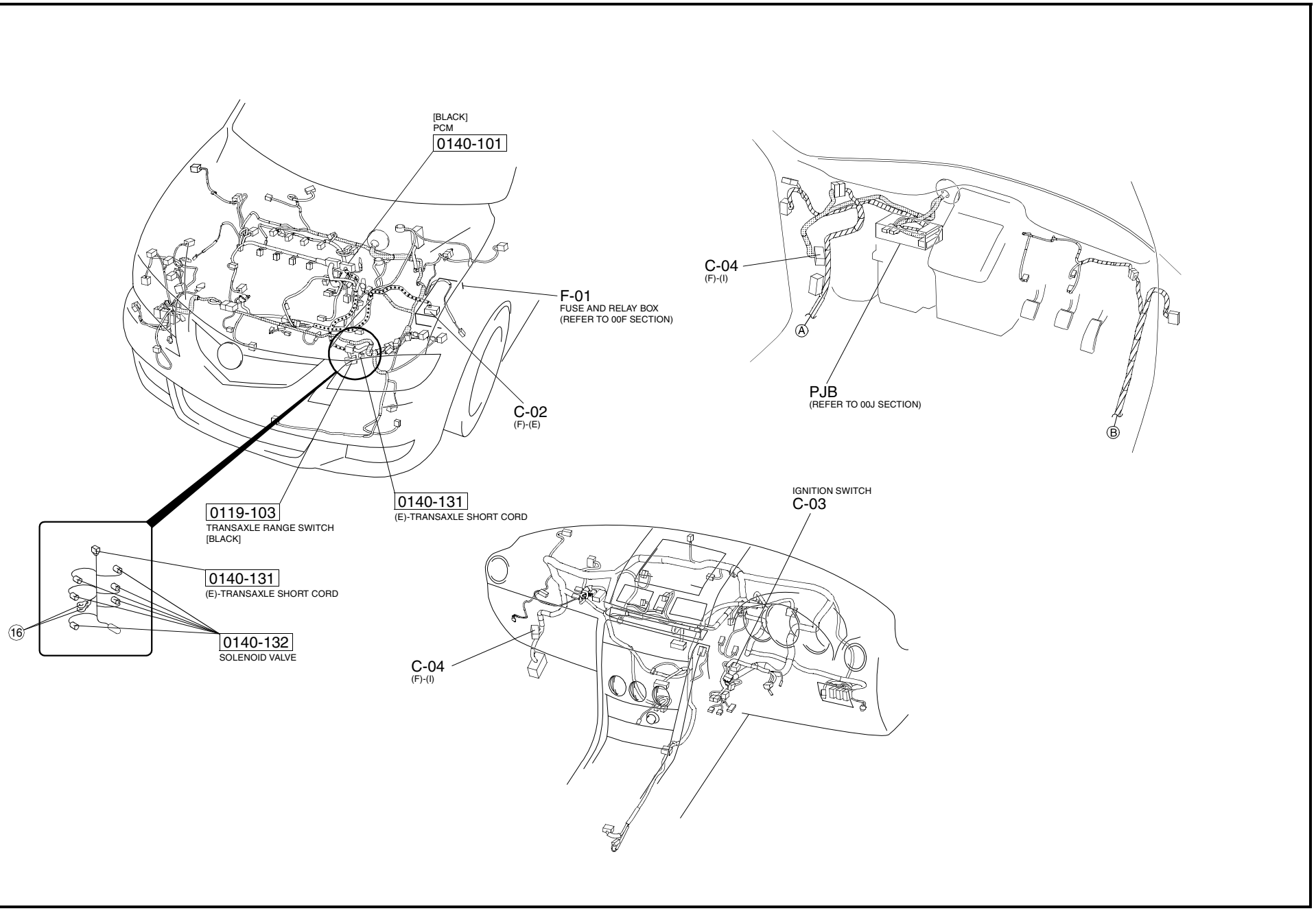

[ ] ATX
MTX:WITHOUT ABS AND DSC
@ WITH IMMOBILIZER SYSTEM
* VACANT

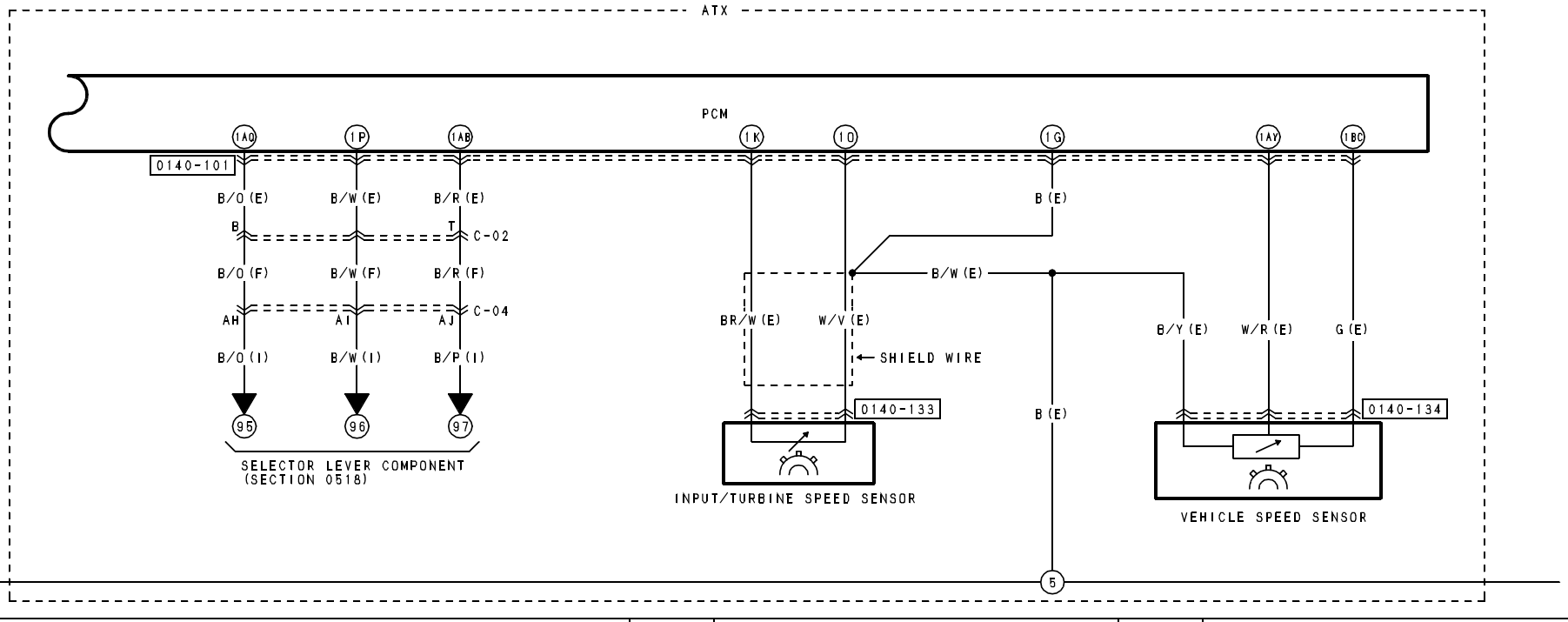

0140-101
PCM

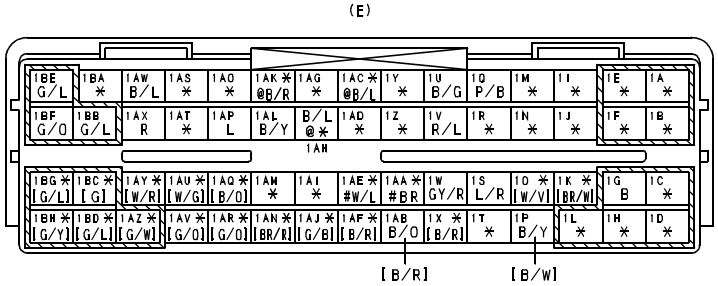

0140-133
INPUT/TURBINE SPEED SENSOR(E)

(ATX)

0140-134
VEHICLE SPEED SENSOR(E)

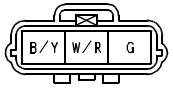

(ATX)

HARNESS SYMBOL : (F) (E) (R)

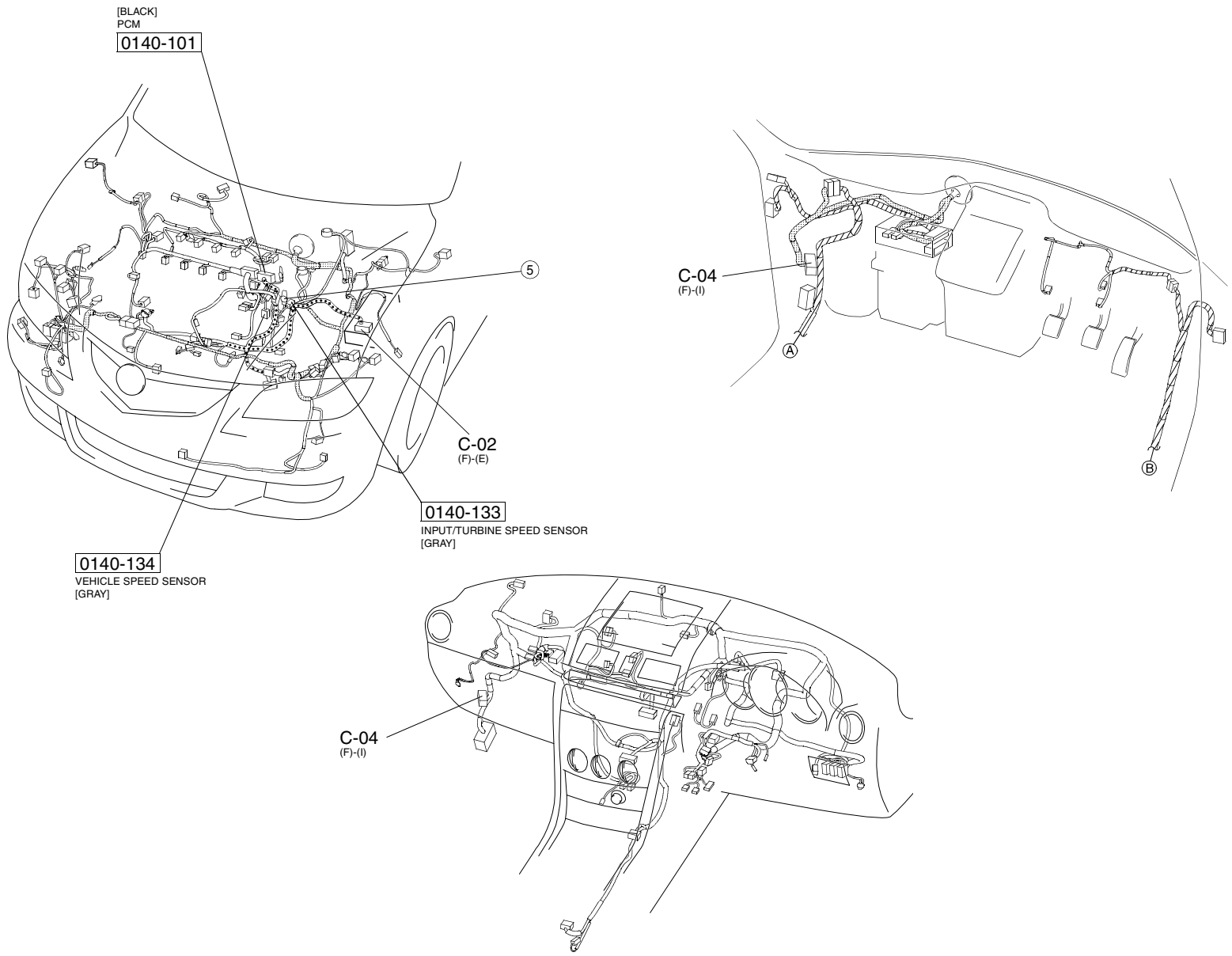

CONTROL SYSTEM (LF/L3:INCLUDES AUTOMATIC TRANSAXLE CONTROL INFORMATION)

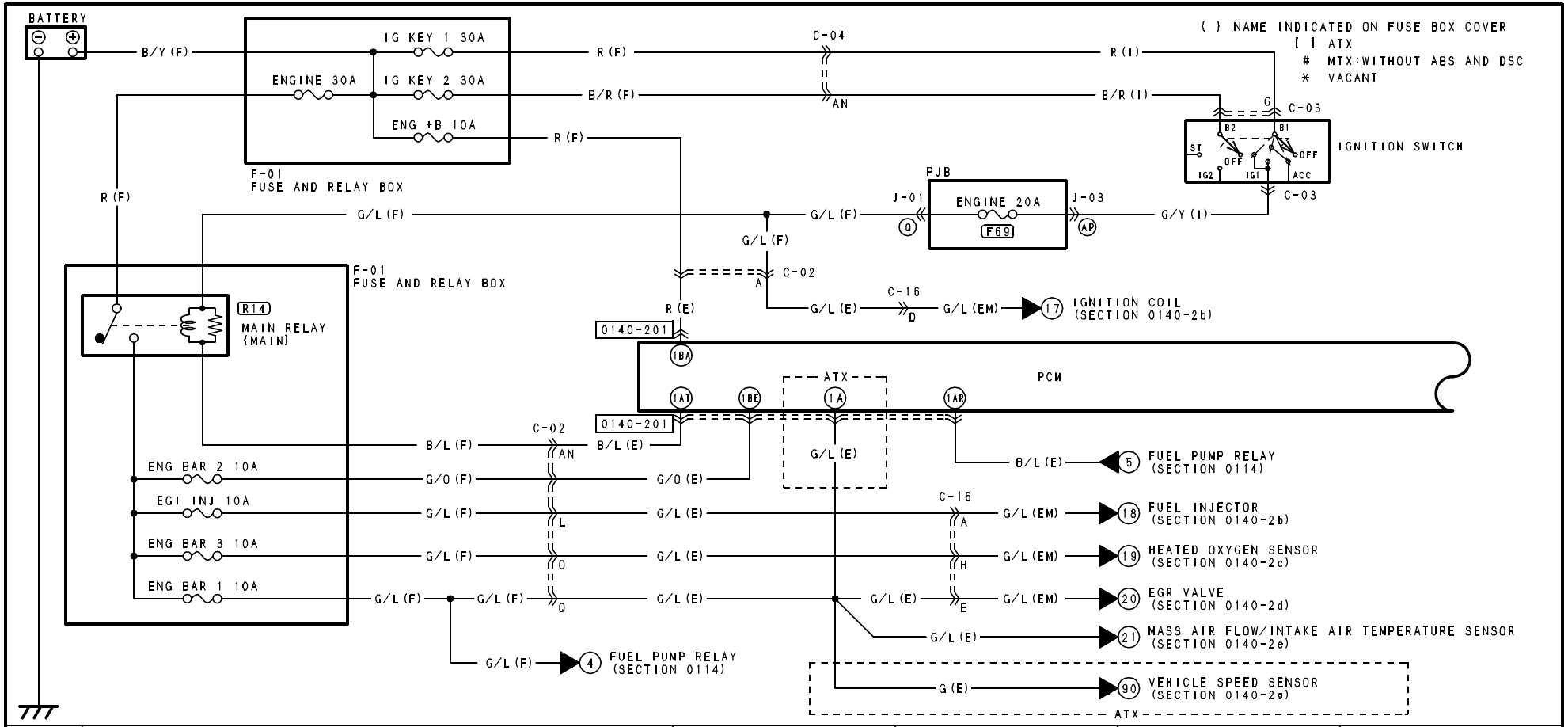

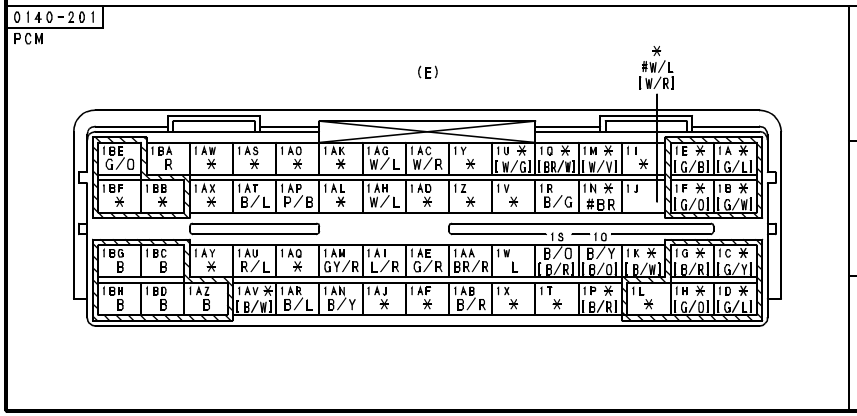

HARNESS SYMBOL : (F) (E) (R)

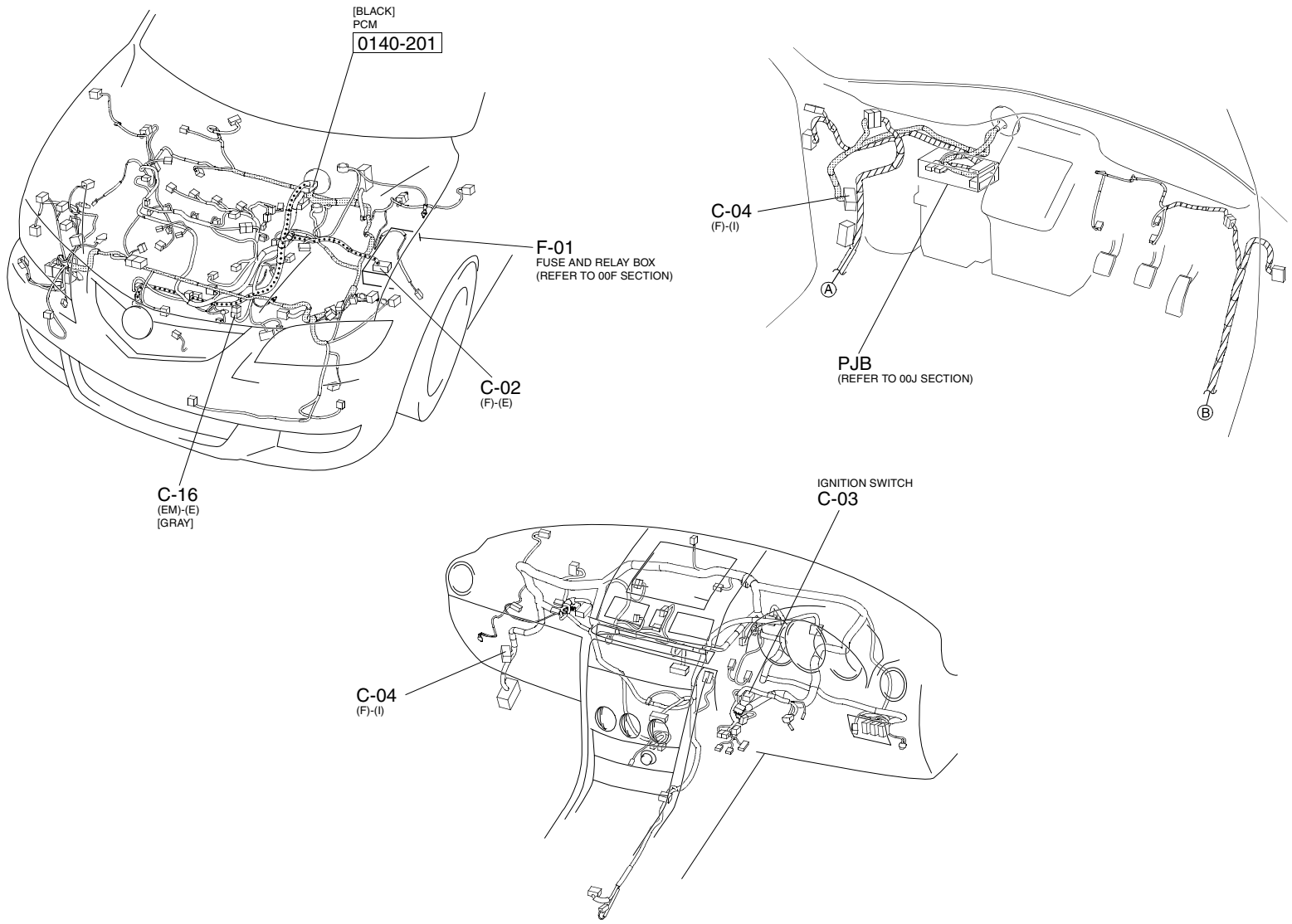

CONTROL SYSTEM (LF/L3:INCLUDES AUTOMATIC TRANSAXLE CONTROL INFORMATION)

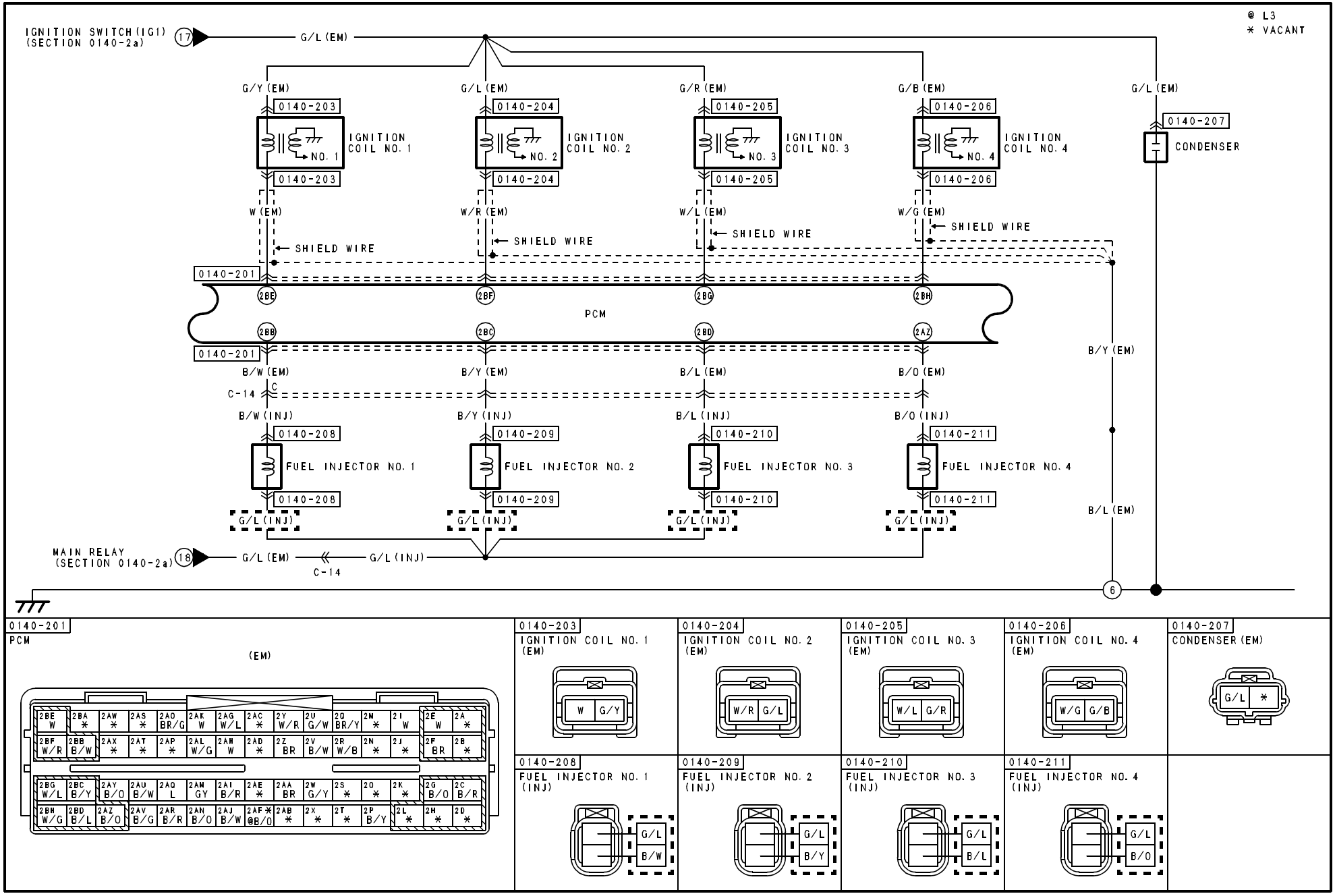

HARNESS SYMBOL : (F) (E) (R)

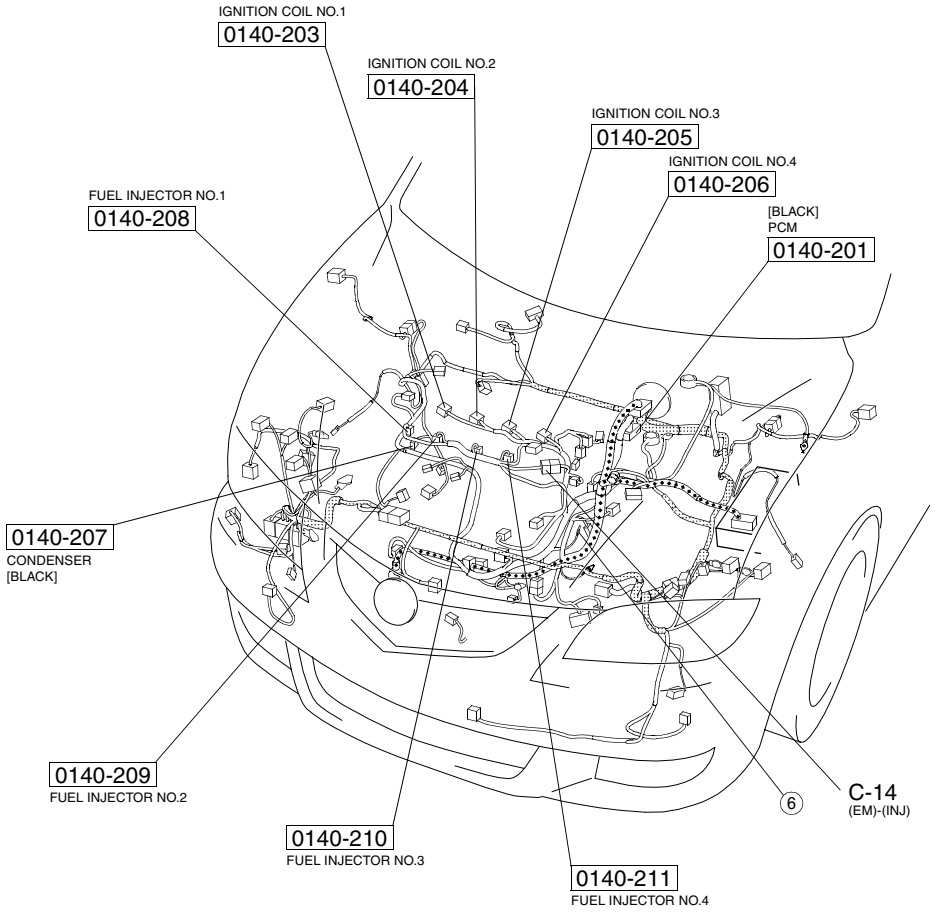

CONTROL SYSTEM (LF/L3:INCLUDES AUTOMATIC TRANSAXLE CONTROL INFORMATION)

@ L3
* VACANT

IDLE AIR CONTROL VALVE
0140-212
G (INJ) B (INJ)
C-14 E K
W (EM) BR (EM)

THROTTLE POSITION SENSOR
0140-213
Y (INJ) W (INJ) BR (INJ)
M J
G/Y (EM) W (EM) BR (EM)
G/Y (EM)

MANIFOLD ABSOLUTE PRESSURE SENSOR
C D B A
0140-214
G/B (EM) W/G (EM) BR/G (EM) BR/G (EM)

0140-201
2E 2F 2W 2I 2AL 2AD
CONSTANT VOLTAGE (Vref)
PCM
SENSOR GROUND
2G 2AG 2C 2AH 2AA 2AK
0140-201

SHIELD WIRE
B/O (EM) W/L (EM)
B/L (EM)
B/R (EM) W (EM)
SHIELD WIRE
BR (EM)
W (EM)

0140-215
FRONT HEATED OXYGEN SENSOR
0140-215
L/R (EM) GY/L (EM)

0140-216
REAR HEATED OXYGEN SENSOR
0140-216
G (EM) BR (EM)

0140-217
ENGINE COOLANT TEMPERATURE SENSOR
0140-217
BR (EM)

MAIN RELAY (SECTION 0140-2a) 19 G/L (EM)

6

0140-201
PCM
(EM)

2BE W	2BA *	2AW *	2AS *	2AO BR/G	2AK W	2AG W/L	2AC *	2Y W/R	2U G/W	2Q BR/Y	2M *	2I W	2E W	2A *
2BF W/R	2BB B/W	2AX *	2AT *	2AP *	2AL W/G	2AH W	2AD *	2Z BR	2V B/W	2R W/B	2N *	2J *	2F BR	2B *
2BG W/L	2BC B/Y	2AY B/O	2AU B/W	2AQ L	2AM GY	2AI B/R	2AE *	2AA BR	2W G/Y	2S *	2O *	2K *	2G B/O	2C B/R
2BH W/G	2BD B/L	2AZ B/O	2AV B/G	2AR B/R	2AN B/O	2AJ B/W	2AF * @B/O	2AB *	2X *	2T *	2P B/Y	2L *	2H *	2D *

0140-212
IDLE AIR CONTROL VALVE (INJ)
B G

0140-213
THROTTLE POSITION SENSOR (INJ)
Y W BR

0140-214
MANIFOLD ABSOLUTE PRESSURE SENSOR (EM)
W/G G/B BR/G BR/G
D C B A

0140-215
FRONT HEATED OXYGEN SENSOR (EM)
W/L L/R
GY/L B/O

0140-216
REAR HEATED OXYGEN SENSOR (EM)
W G
BR B/R

0140-217
ENGINE COOLANT TEMPERATURE SENSOR (EM)
BR W

HARNESS SYMBOL : (F) (E) (R)

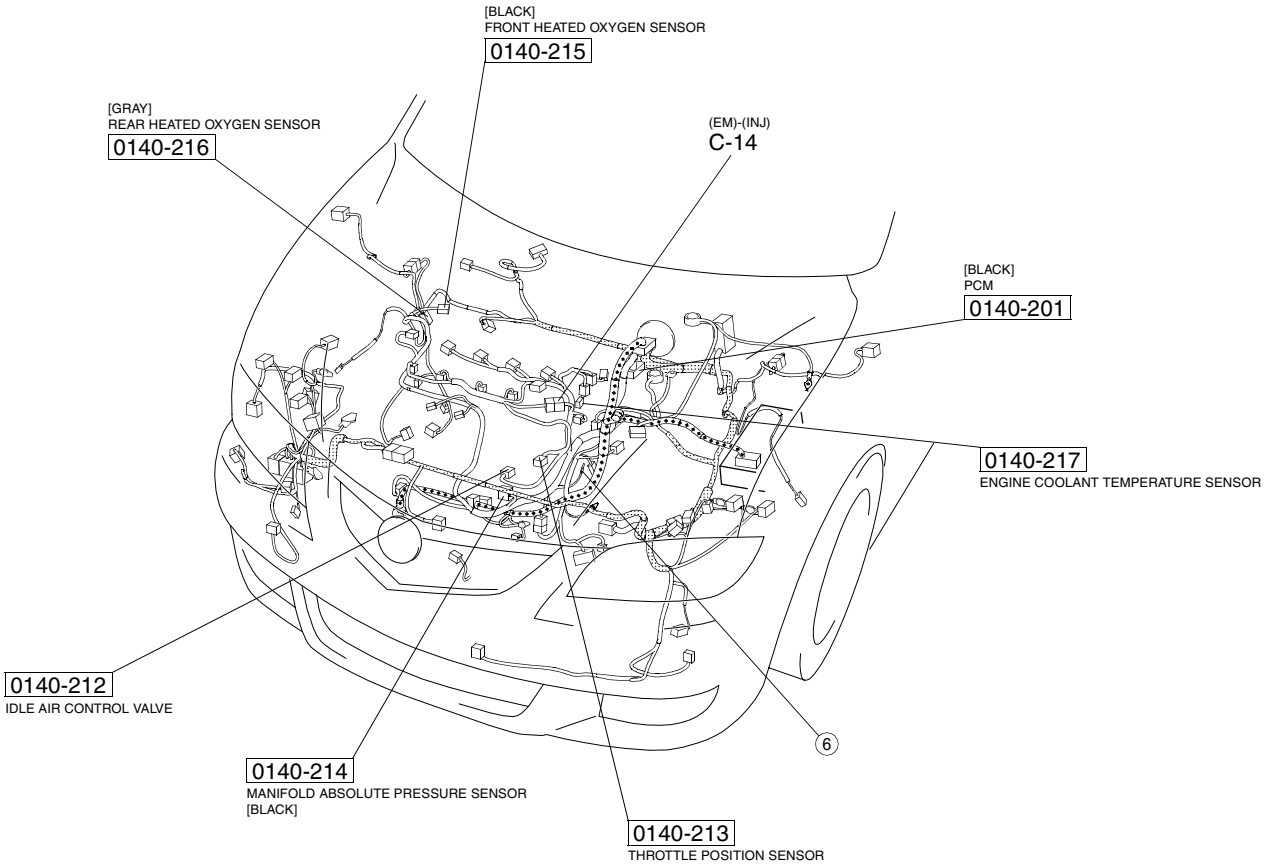

CONTROL SYSTEM (LF/L3:INCLUDES AUTOMATIC TRANSAXLE CONTROL INFORMATION)

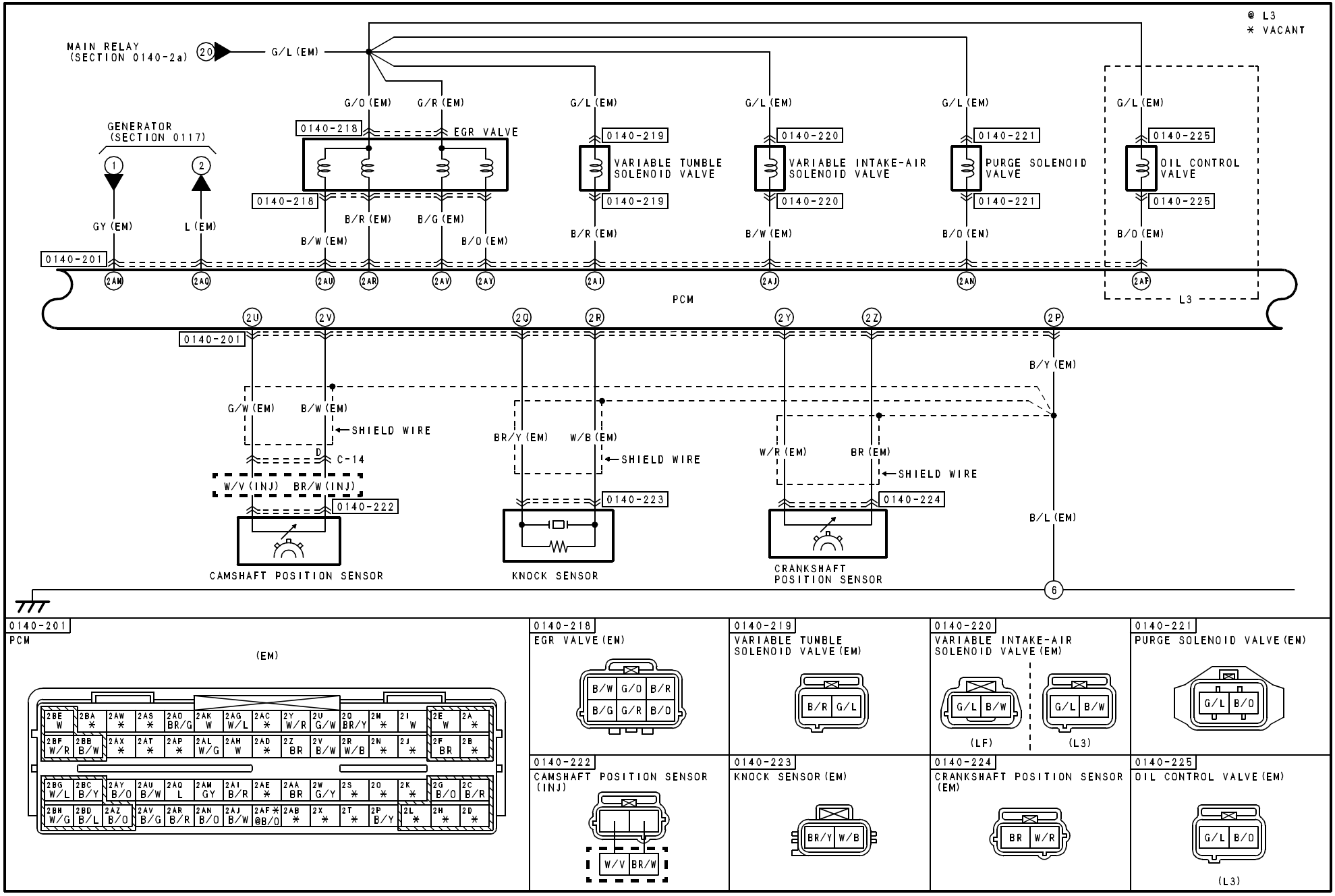

HARNESS SYMBOL : (F) (E) (R)

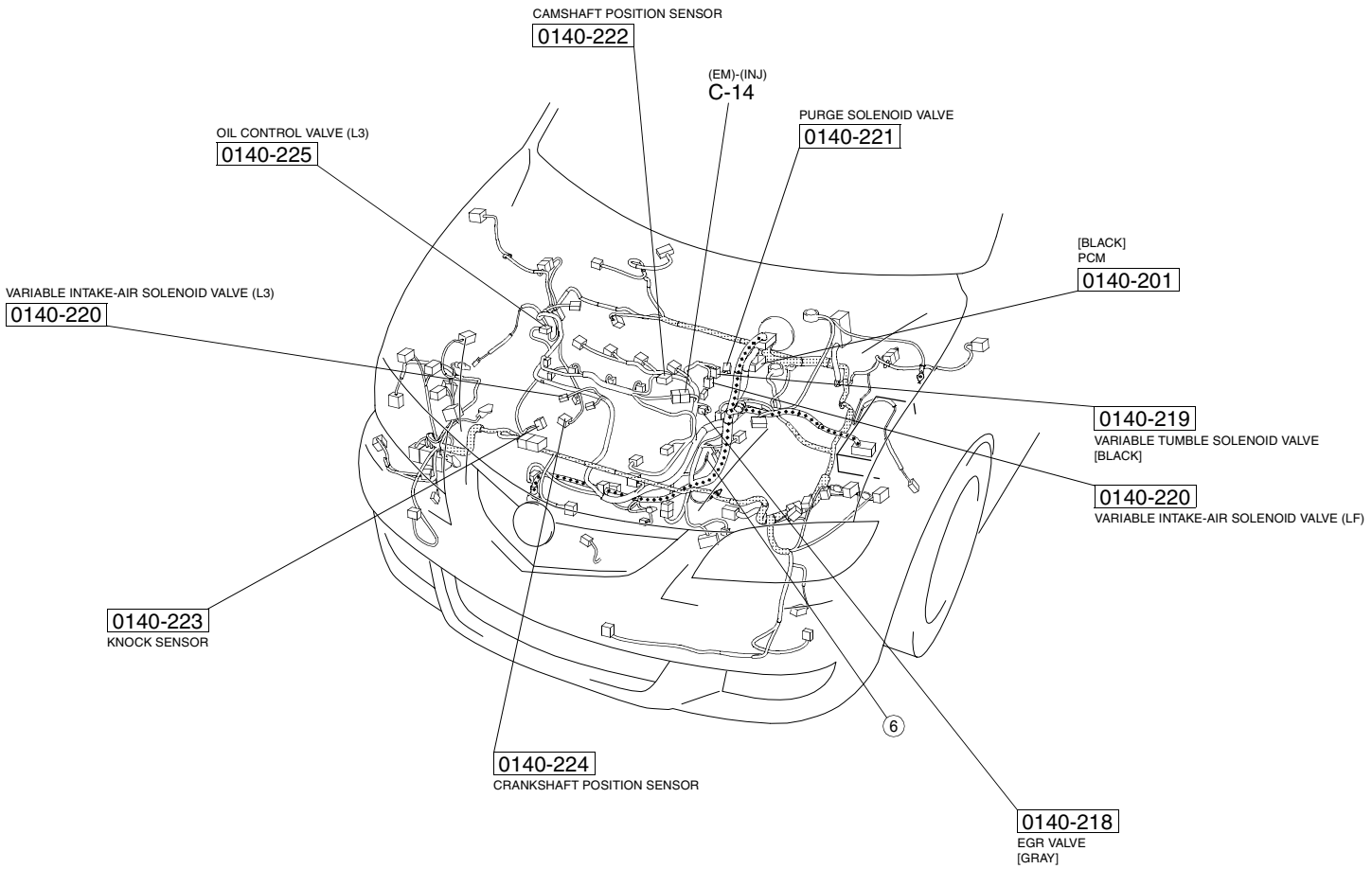

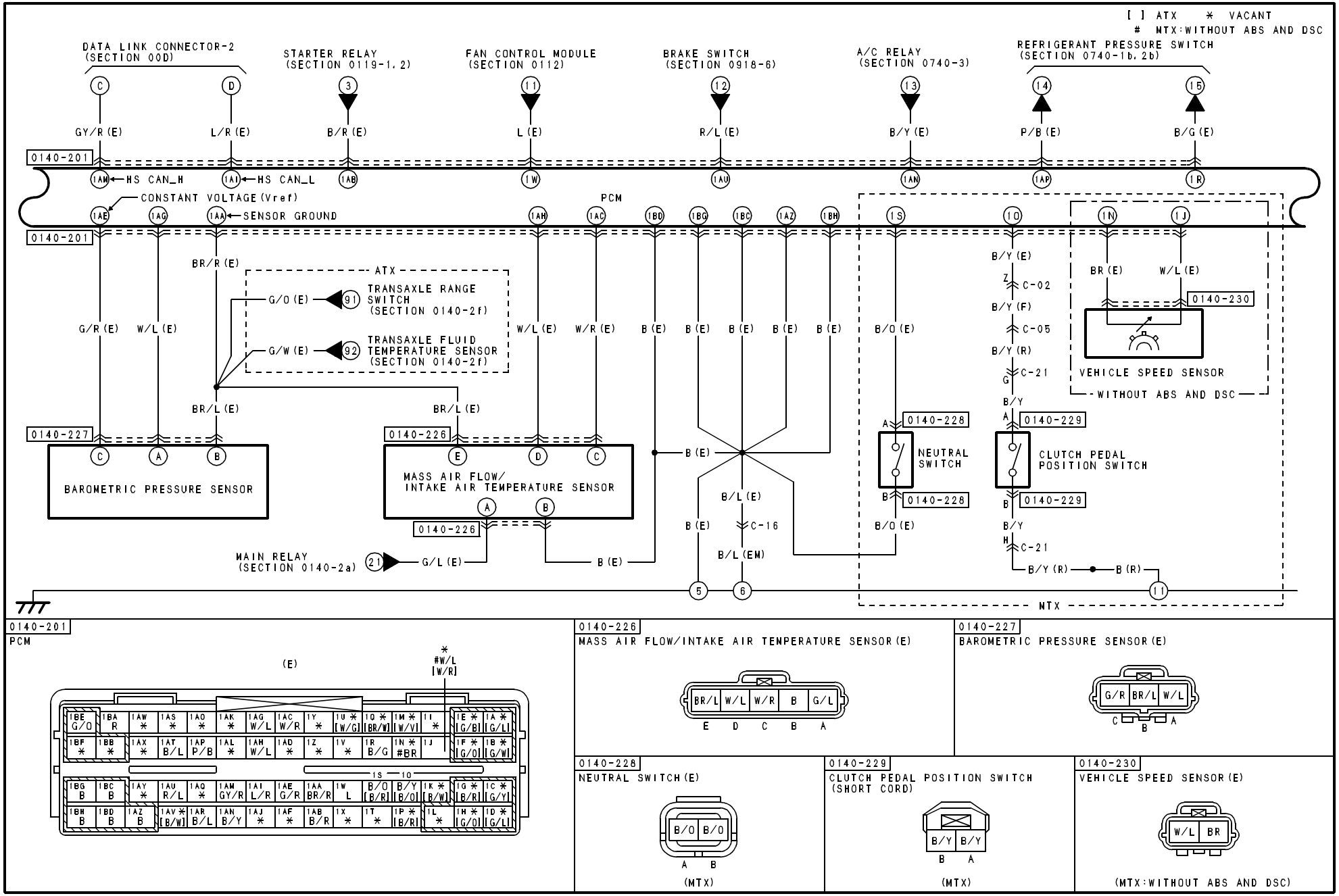
[ ] ATX * VACANT
MTX:WITHOUT ABS AND DSC
DATA LINK CONNECTOR-2 (SECTION 00D)
STARTER RELAY (SECTION 0119-1, 2)
FAN CONTROL MODULE (SECTION 0112)
BRAKE SWITCH (SECTION 0918-6)
A/C RELAY (SECTION 0740-3)
REFRIGERANT PRESSURE SWITCH (SECTION 0740-1b, 2b)
GY/R (E)
L/R (E)
B/R (E)
L (E)
R/L (E)
B/Y (E)
P/B (E)
B/G (E)
0140-201
HS CAN_H
HS CAN_L
CONSTANT VOLTAGE (Vref)
SENSOR GROUND
PCM
BR/R (E)
ATX
TRANSAXLE RANGE SWITCH (SECTION 0140-2f)
TRANSAXLE FLUID TEMPERATURE SENSOR (SECTION 0140-2f)
G/O (E)
G/W (E)
G/R (E)
W/L (E)
W/R (E)
B (E)
B/O (E)
B/Y (E)
C-02
B/Y (F)
C-05
B/Y (R)
C-21
BR (E)
W/L (E)
0140-230
VEHICLE SPEED SENSOR
WITHOUT ABS AND DSC
BR/L (E)
0140-227
0140-226
BAROMETRIC PRESSURE SENSOR
MASS AIR FLOW/ INTAKE AIR TEMPERATURE SENSOR
0140-228
NEUTRAL SWITCH
0140-229
CLUTCH PEDAL POSITION SWITCH
B/L (E)
C-16
B/L (EM)
MAIN RELAY (SECTION 0140-2a)
G/L (E)
B/Y (R)
B (R)
MTX
0140-201
PCM
(E)
#W/L [W/R]
0140-226
MASS AIR FLOW/INTAKE AIR TEMPERATURE SENSOR (E)
BR/L W/L W/R B G/L
E D C B A
0140-227
BAROMETRIC PRESSURE SENSOR (E)
G/R BR/L W/L
C B A
0140-228
NEUTRAL SWITCH (E)
B/O B/O
A B
(MTX)
0140-229
CLUTCH PEDAL POSITION SWITCH (SHORT CORD)
B/Y B/Y
B A
(MTX)
0140-230
VEHICLE SPEED SENSOR (E)
W/L BR
(MTX:WITHOUT ABS AND DSC)

HARNESS SYMBOL : (F) (E) (R)

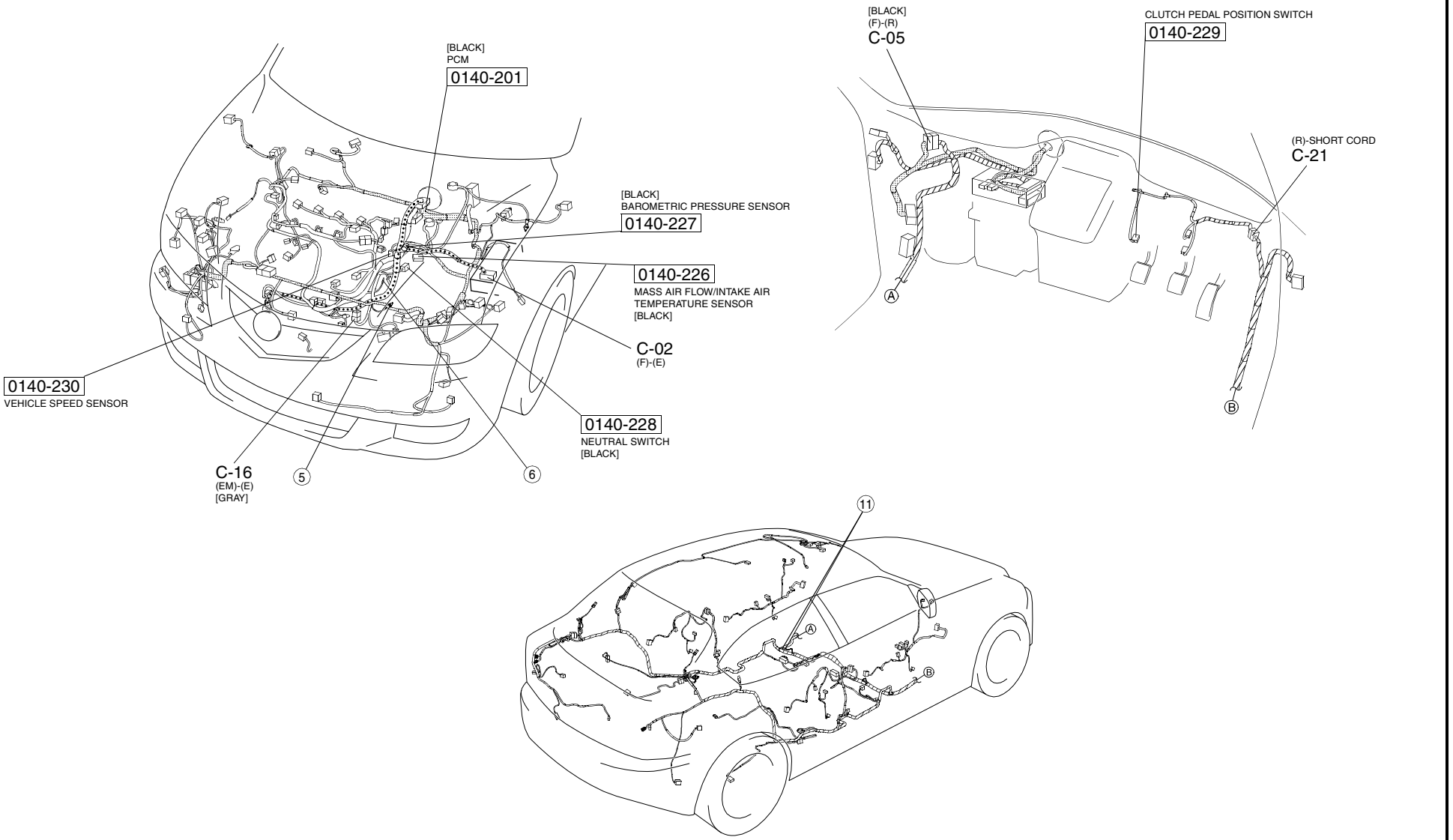

CONTROL SYSTEM (LF/L3:INCLUDES AUTOMATIC TRANSAXLE CONTROL INFORMATION)

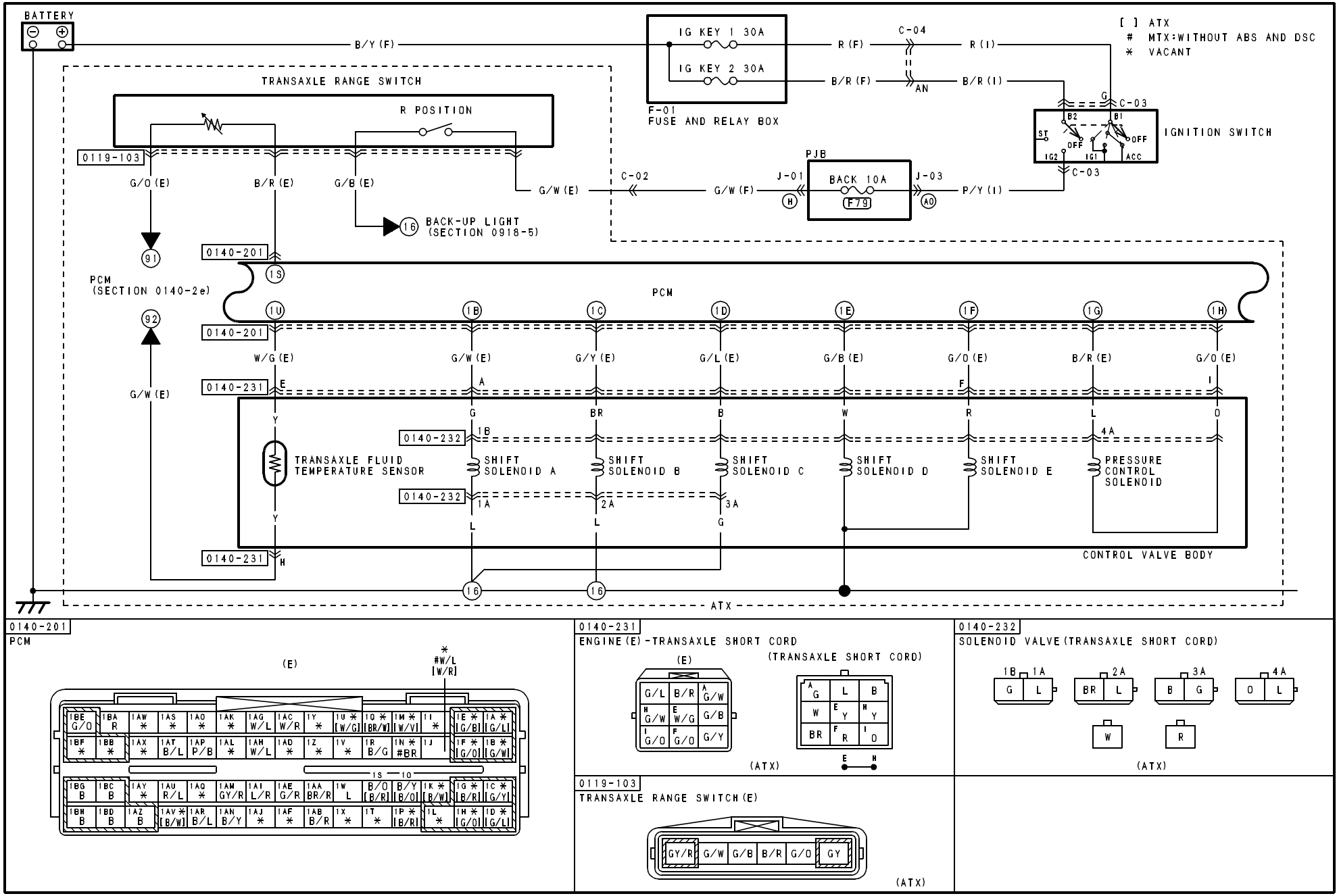

HARNESS SYMBOL : (F) (E) (R)

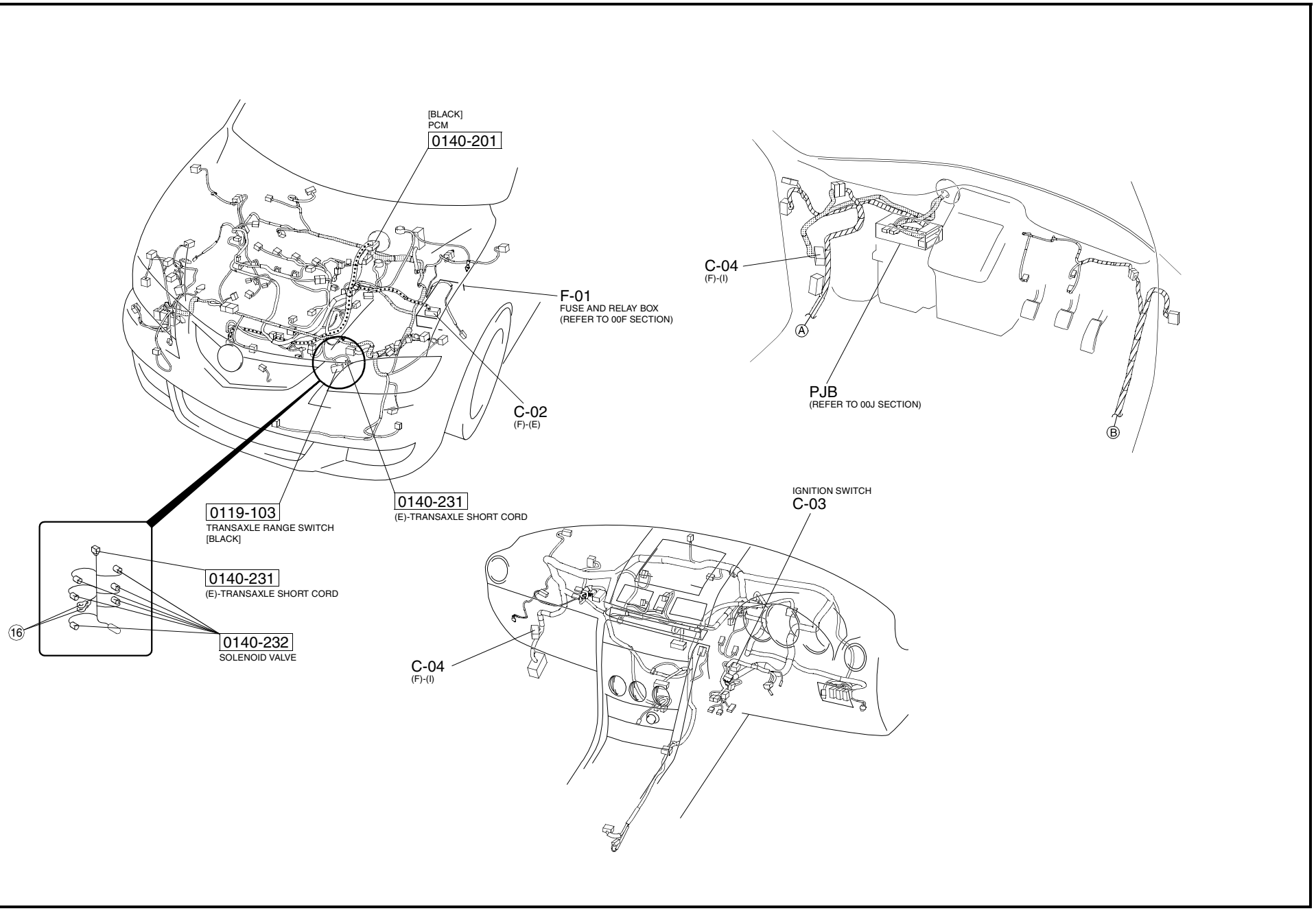

[ ] ATX
MTX:WITHOUT ABS AND DSC
* VACANT

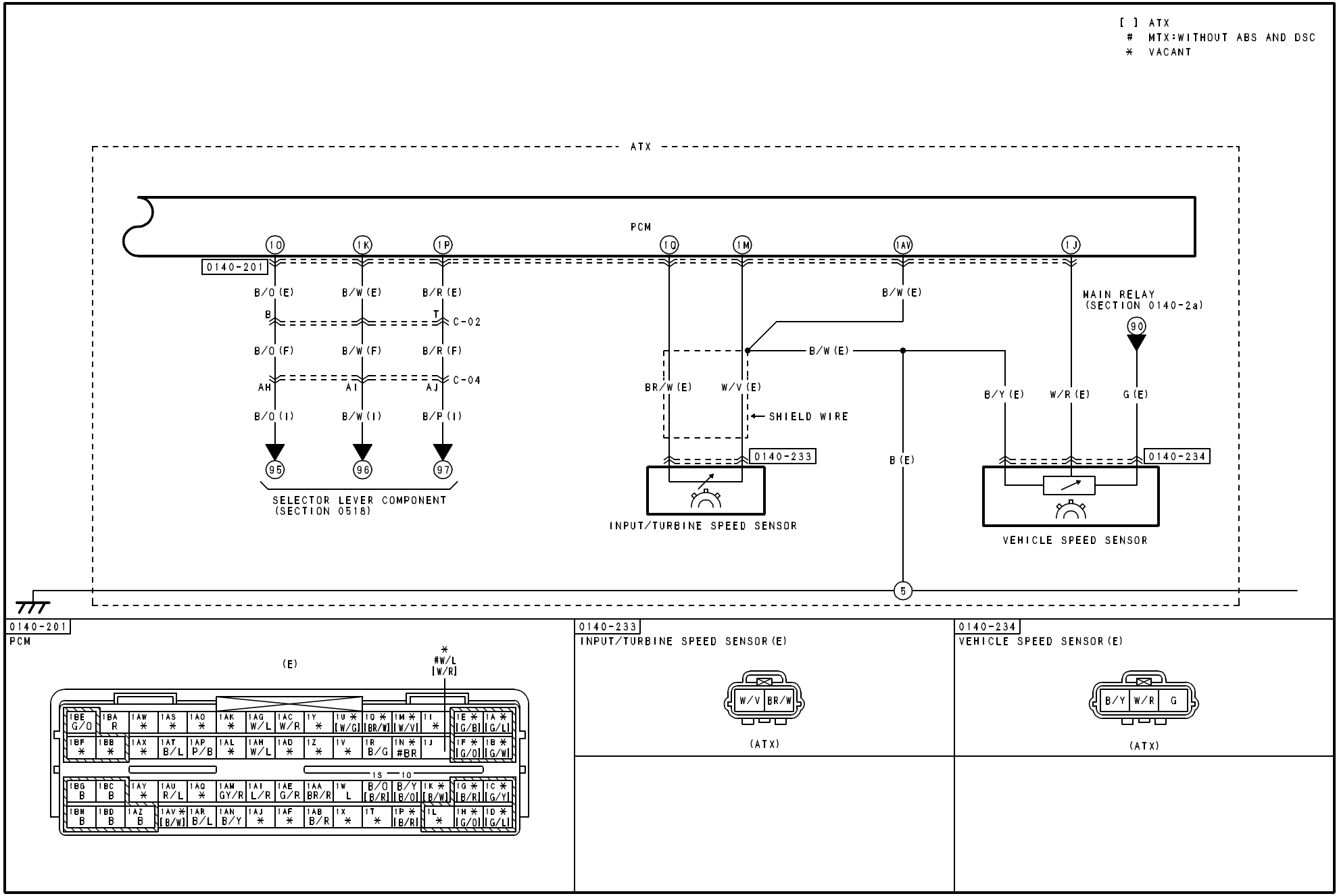

HARNESS SYMBOL : (F) (E) (R)

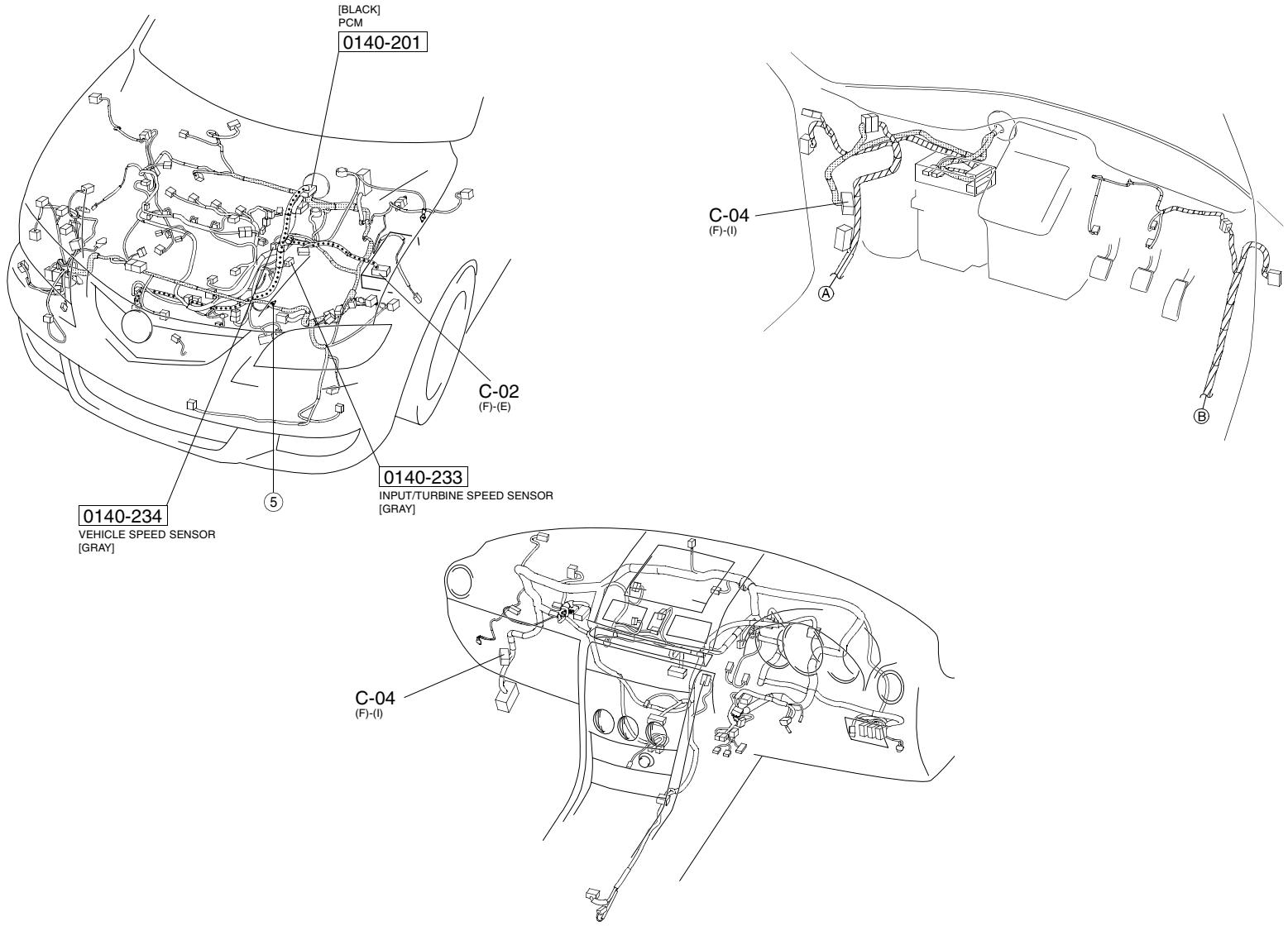

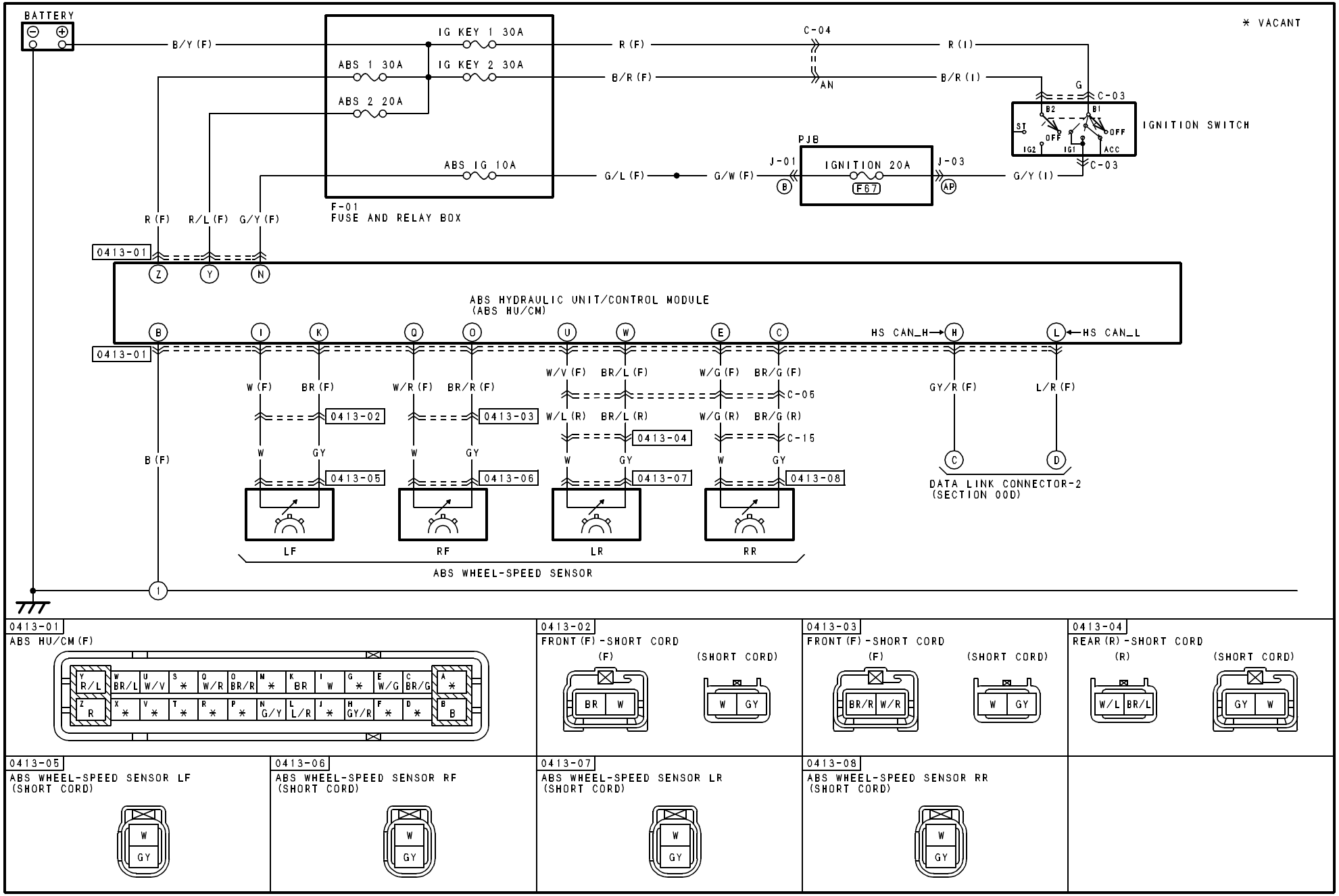
BATTERY
B/Y (F)
IG KEY 1 30A
ABS 1 30A
IG KEY 2 30A
ABS 2 20A
ABS IG 10A
F-01
FUSE AND RELAY BOX
R (F)
B/R (F)
C-04
AN
R (I)
B/R (I)
G
C-03
IGNITION SWITCH
ST
OFF
IG2
IG1
ACC
G/L (F)
G/W (F)
J-01
PJB
IGNITION 20A
F67
J-03
G/Y (I)
R (F)
R/L (F)
G/Y (F)
0413-01
ABS HYDRAULIC UNIT/CONTROL MODULE
(ABS HU/CM)
HS CAN_H
HS CAN_L
W (F)
BR (F)
W/R (F)
BR/R (F)
W/V (F)
BR/L (F)
W/G (F)
BR/G (F)
C-05
W/L (R)
BR/L (R)
W/G (R)
BR/G (R)
C-15
0413-02
0413-03
0413-04
0413-05
0413-06
0413-07
0413-08
B (F)
W
GY
GY/R (F)
L/R (F)
DATA LINK CONNECTOR-2
(SECTION 00D)
LF
RF
LR
RR
ABS WHEEL-SPEED SENSOR
* VACANT
0413-01
ABS HU/CM (F)
0413-02
FRONT (F) -SHORT CORD
(F)
(SHORT CORD)
0413-03
FRONT (F) -SHORT CORD
(F)
(SHORT CORD)
0413-04
REAR (R) -SHORT CORD
(R)
(SHORT CORD)
0413-05
ABS WHEEL-SPEED SENSOR LF
(SHORT CORD)
0413-06
ABS WHEEL-SPEED SENSOR RF
(SHORT CORD)
0413-07
ABS WHEEL-SPEED SENSOR LR
(SHORT CORD)
0413-08
ABS WHEEL-SPEED SENSOR RR
(SHORT CORD)

HARNESS SYMBOL : (F) (E) (R)

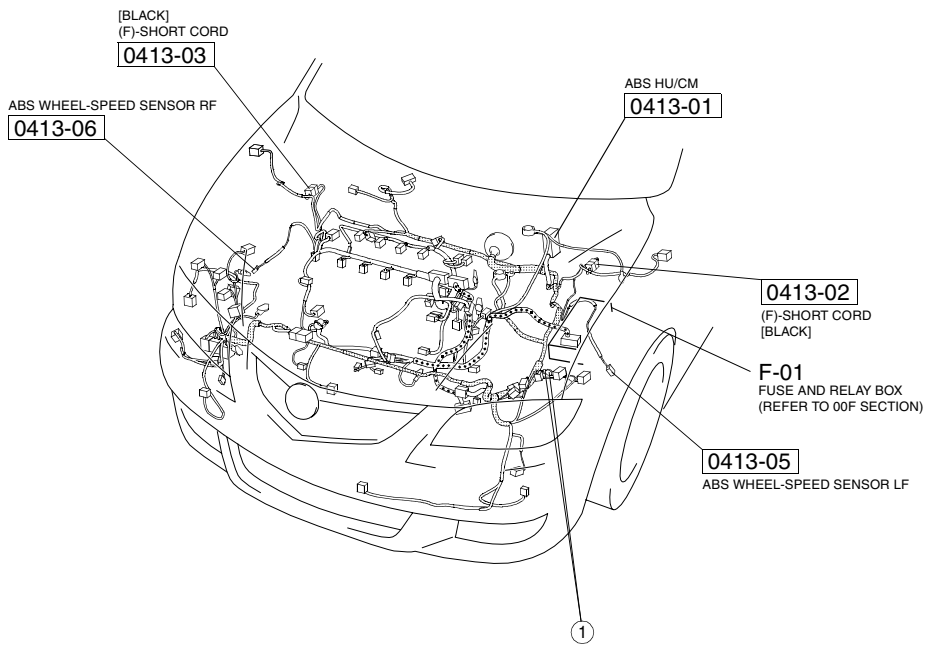

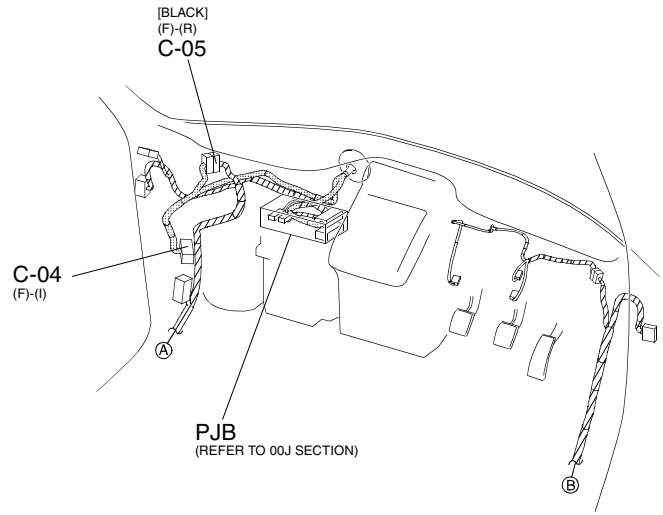

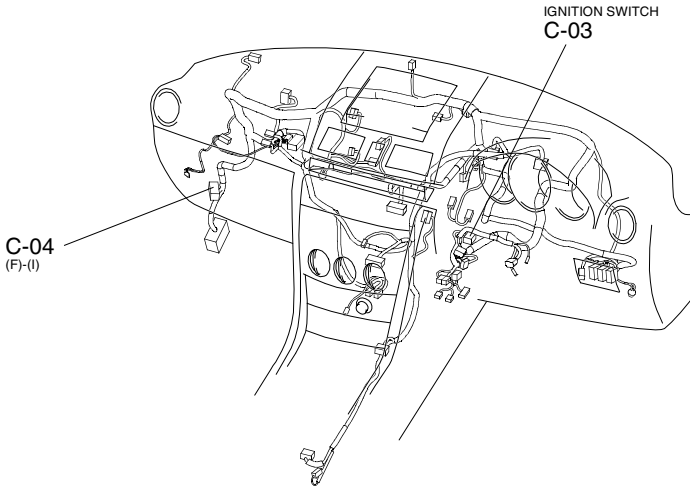

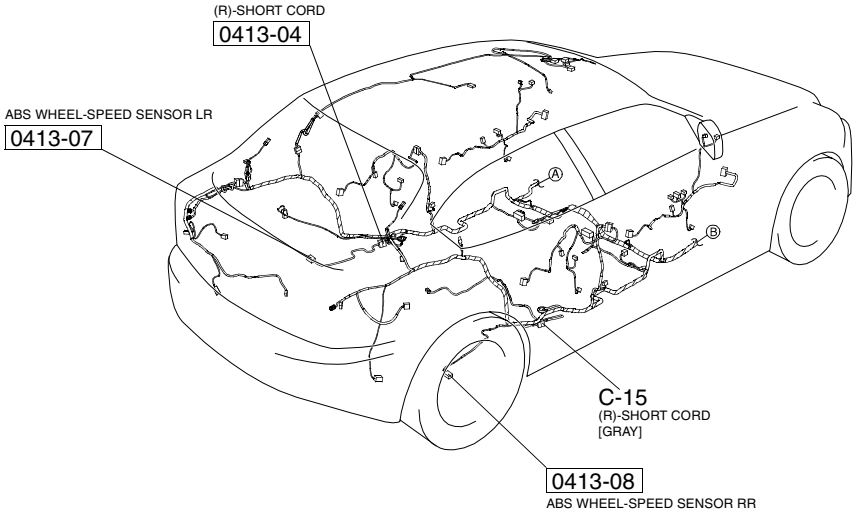

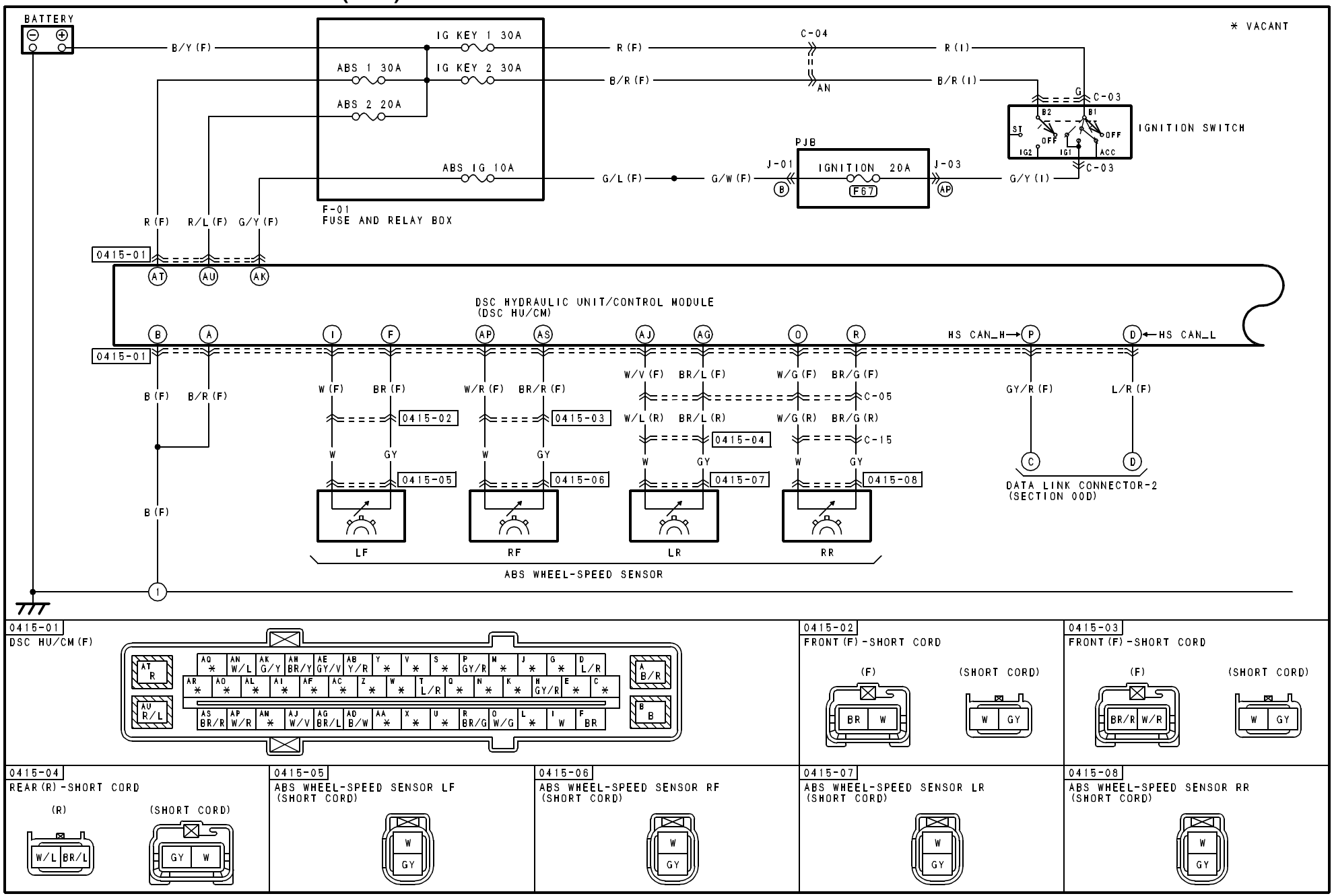
BATTERY
B/Y (F)
IG KEY 1 30A
ABS 1 30A
IG KEY 2 30A
ABS 2 20A
ABS IG 10A
F-01
FUSE AND RELAY BOX
R (F)
B/R (F)
C-04
AN
R (I)
B/R (I)
C-03
IGNITION SWITCH
ST
OFF
IG2
IG1
ACC
PJB
J-01
IGNITION 20A
F67
J-03
G/L (F)
G/W (F)
G/Y (I)
* VACANT
R (F)
R/L (F)
G/Y (F)
0415-01
DSC HYDRAULIC UNIT/CONTROL MODULE
(DSC HU/CM)
HS CAN_H
HS CAN_L
B (F)
B/R (F)
W (F)
BR (F)
W/R (F)
BR/R (F)
W/V (F)
BR/L (F)
W/G (F)
BR/G (F)
C-05
W/L (R)
BR/L (R)
W/G (R)
BR/G (R)
C-15
0415-02
0415-03
0415-04
0415-05
0415-06
0415-07
0415-08
W
GY
GY/R (F)
L/R (F)
DATA LINK CONNECTOR-2
(SECTION 00D)
LF
RF
LR
RR
ABS WHEEL-SPEED SENSOR

0415-01
DSC HU/CM (F)
0415-02
FRONT (F) -SHORT CORD
(F)
(SHORT CORD)
0415-03
FRONT (F) -SHORT CORD
0415-04
REAR (R) -SHORT CORD
(R)
0415-05
ABS WHEEL-SPEED SENSOR LF
(SHORT CORD)
0415-06
ABS WHEEL-SPEED SENSOR RF
(SHORT CORD)
0415-07
ABS WHEEL-SPEED SENSOR LR
(SHORT CORD)
0415-08
ABS WHEEL-SPEED SENSOR RR
(SHORT CORD)

HARNESS SYMBOL : (F) (E) (R)

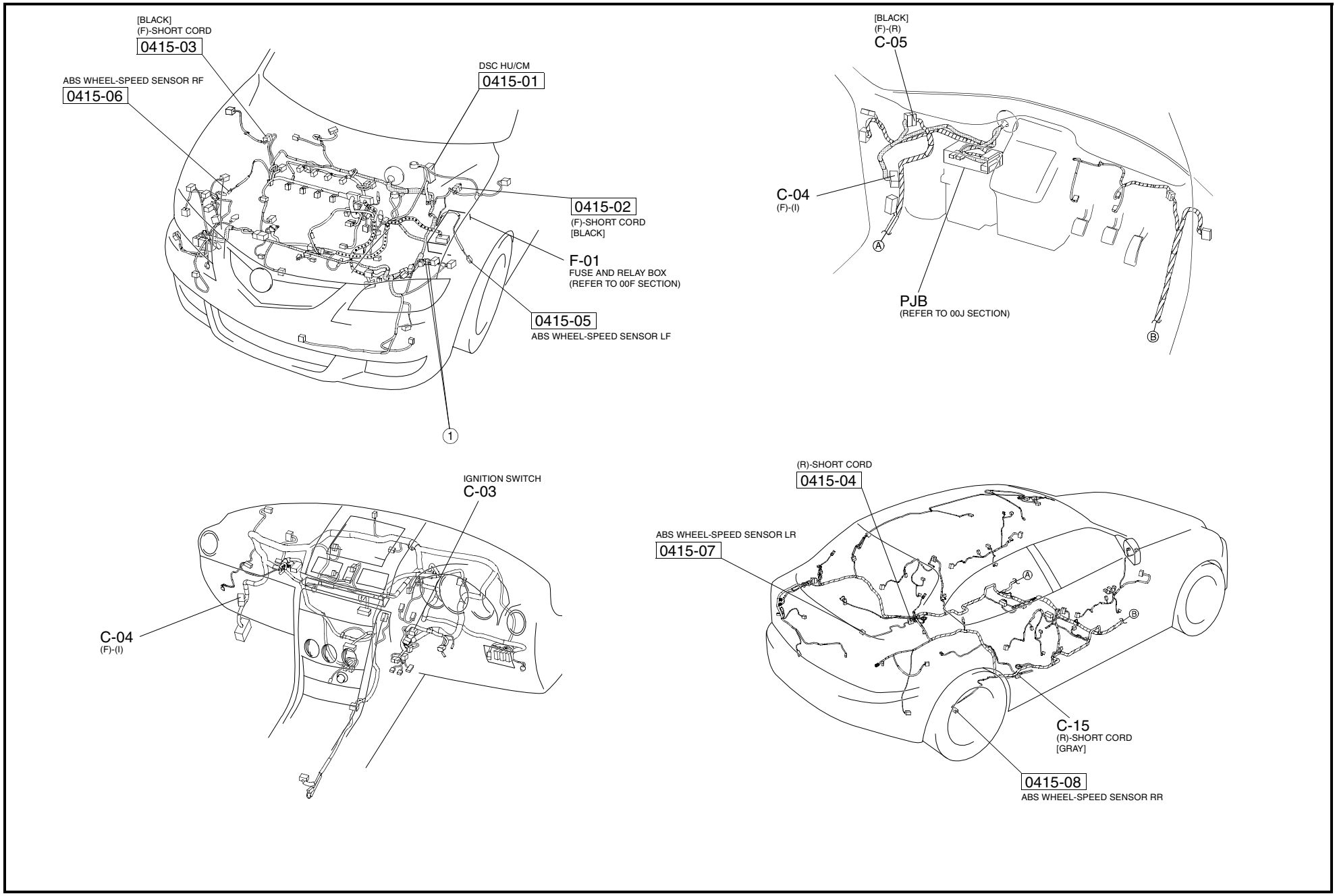

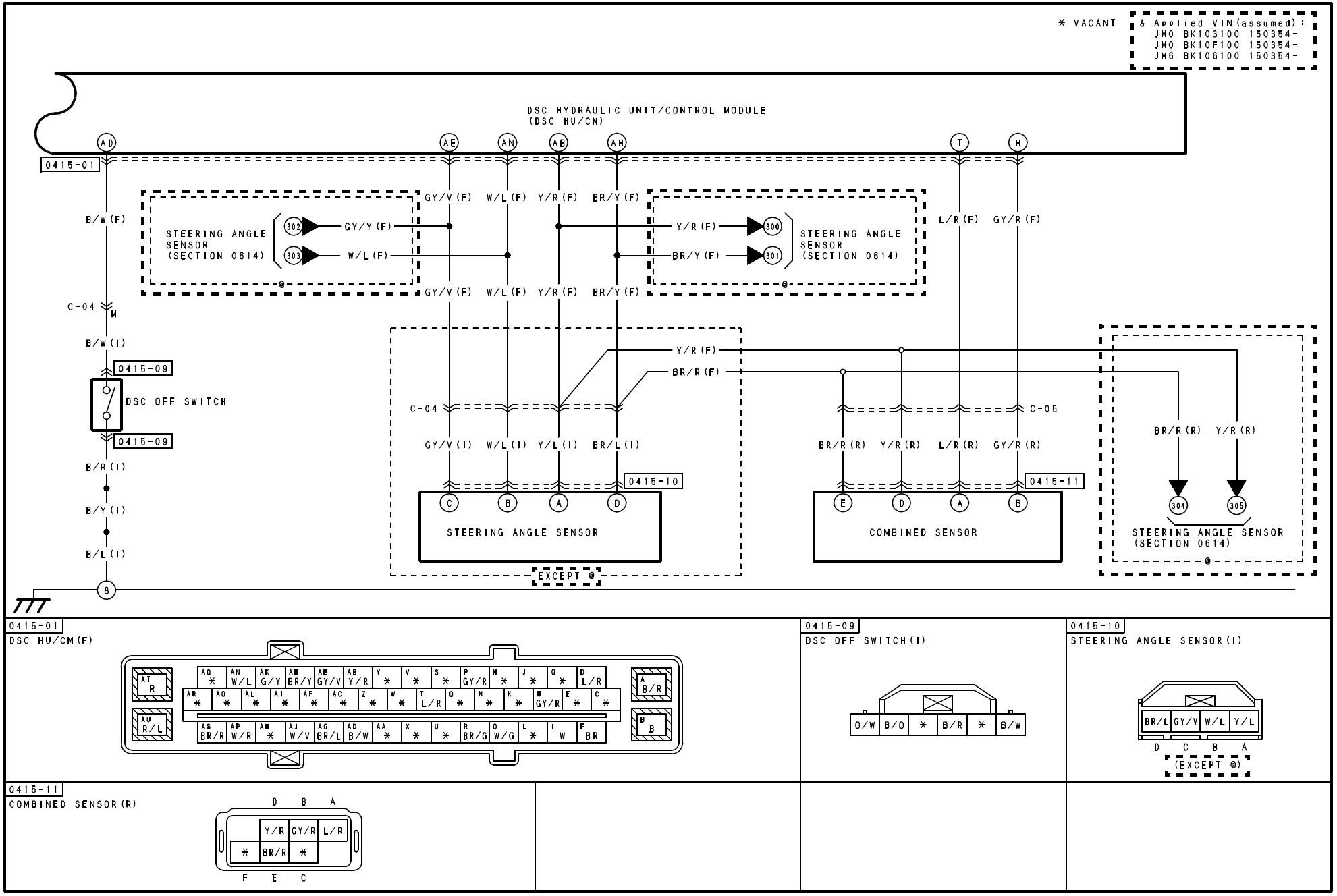
* VACANT
& Applied VIN(assumed):
JM0 BK103100 150354-
JM0 BK10F100 150354-
JM6 BK106100 150354-
DSC HYDRAULIC UNIT/CONTROL MODULE
(DSC HU/CM)
AD
AE
AN
AB
AH
T
H
0415-01
B/W(F)
STEERING ANGLE SENSOR (SECTION 0614)
302
303
GY/Y(F)
W/L(F)
GY/V(F)
W/L(F)
Y/R(F)
BR/Y(F)
Y/R(F)
BR/Y(F)
300
301
STEERING ANGLE SENSOR (SECTION 0614)
L/R(F)
GY/R(F)
C-04
M
B/W(I)
0415-09
DSC OFF SWITCH
0415-09
B/R(I)
B/Y(I)
B/L(I)
8
Y/R(F)
BR/R(F)
C-04
GY/V(I)
W/L(I)
Y/L(I)
BR/L(I)
0415-10
C
B
A
D
STEERING ANGLE SENSOR
EXCEPT @
C-05
BR/R(R)
Y/R(R)
L/R(R)
GY/R(R)
0415-11
E
D
A
B
COMBINED SENSOR
BR/R(R)
Y/R(R)
304
305
STEERING ANGLE SENSOR (SECTION 0614)
0415-01
DSC HU/CM(F)
0415-09
DSC OFF SWITCH(I)
O/W
B/O
B/R
B/W
0415-10
STEERING ANGLE SENSOR(I)
BR/L
GY/V
W/L
Y/L
D
C
B
A
(EXCEPT @)
0415-11
COMBINED SENSOR(R)
D
B
A
Y/R
GY/R
L/R
BR/R
F
E
C

HARNESS SYMBOL : (F) (E) (R)

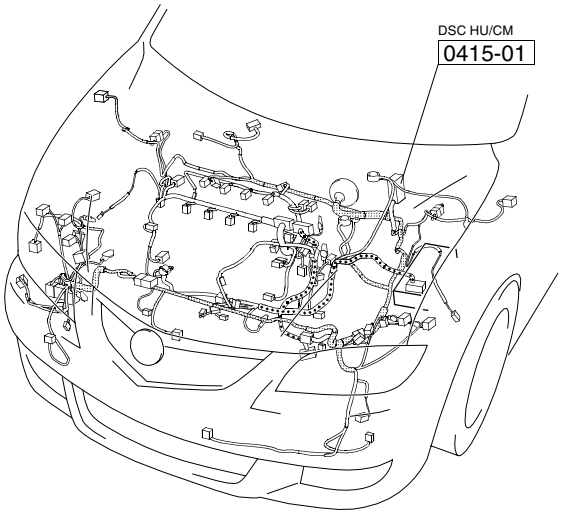

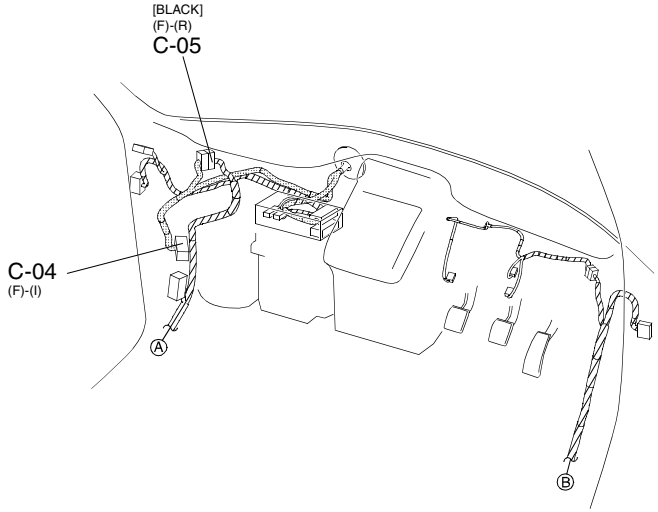

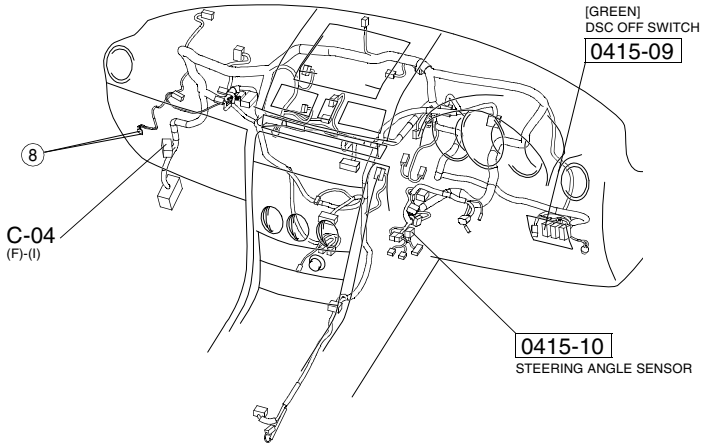

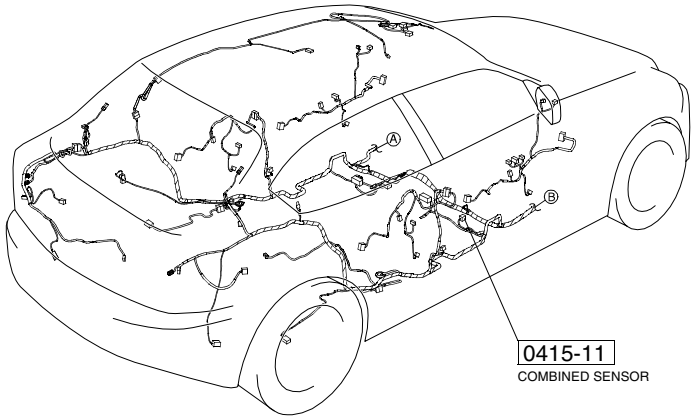

KEY INTERLOCK SYSTEM/SHIFT-LOCK SYSTEM

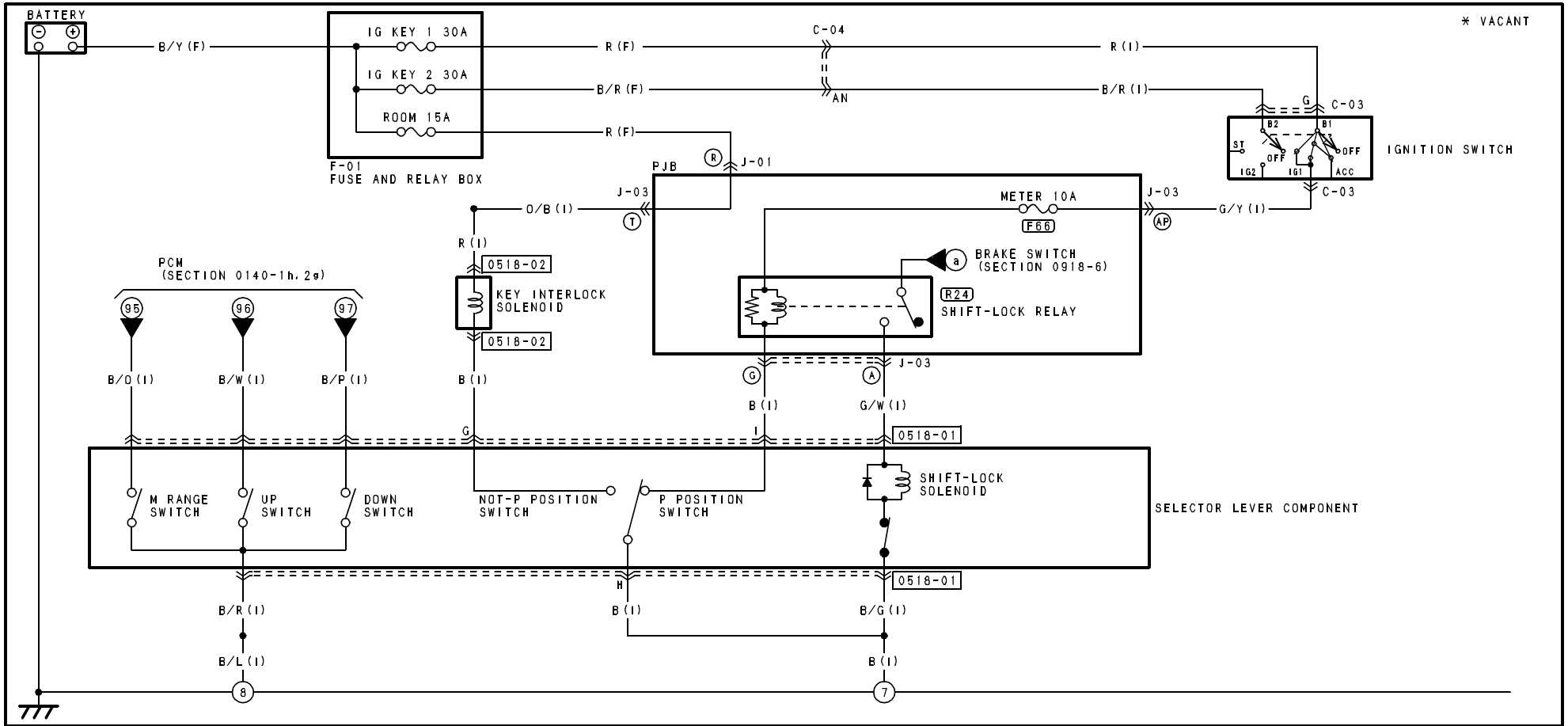

0518-01
SELECTOR LEVER COMPONENT (I)

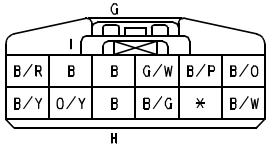

0518-02
KEY INTERLOCK SOLENOID (I)

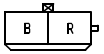

HARNESS SYMBOL : (F) (E) (R)

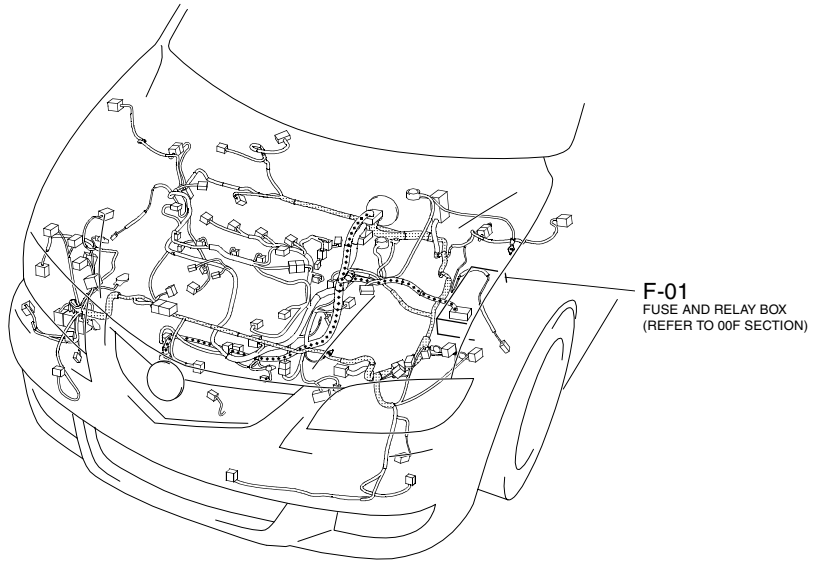

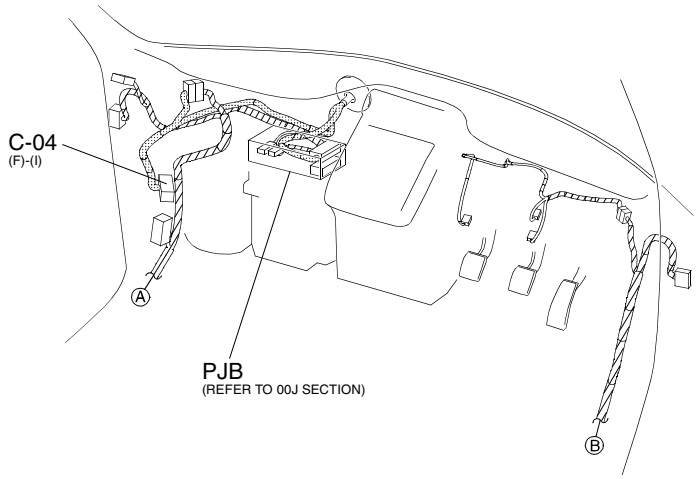

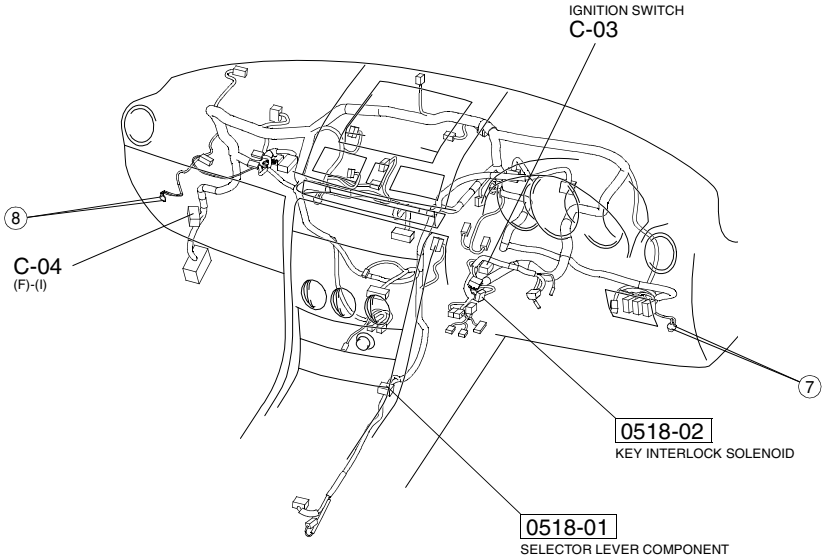

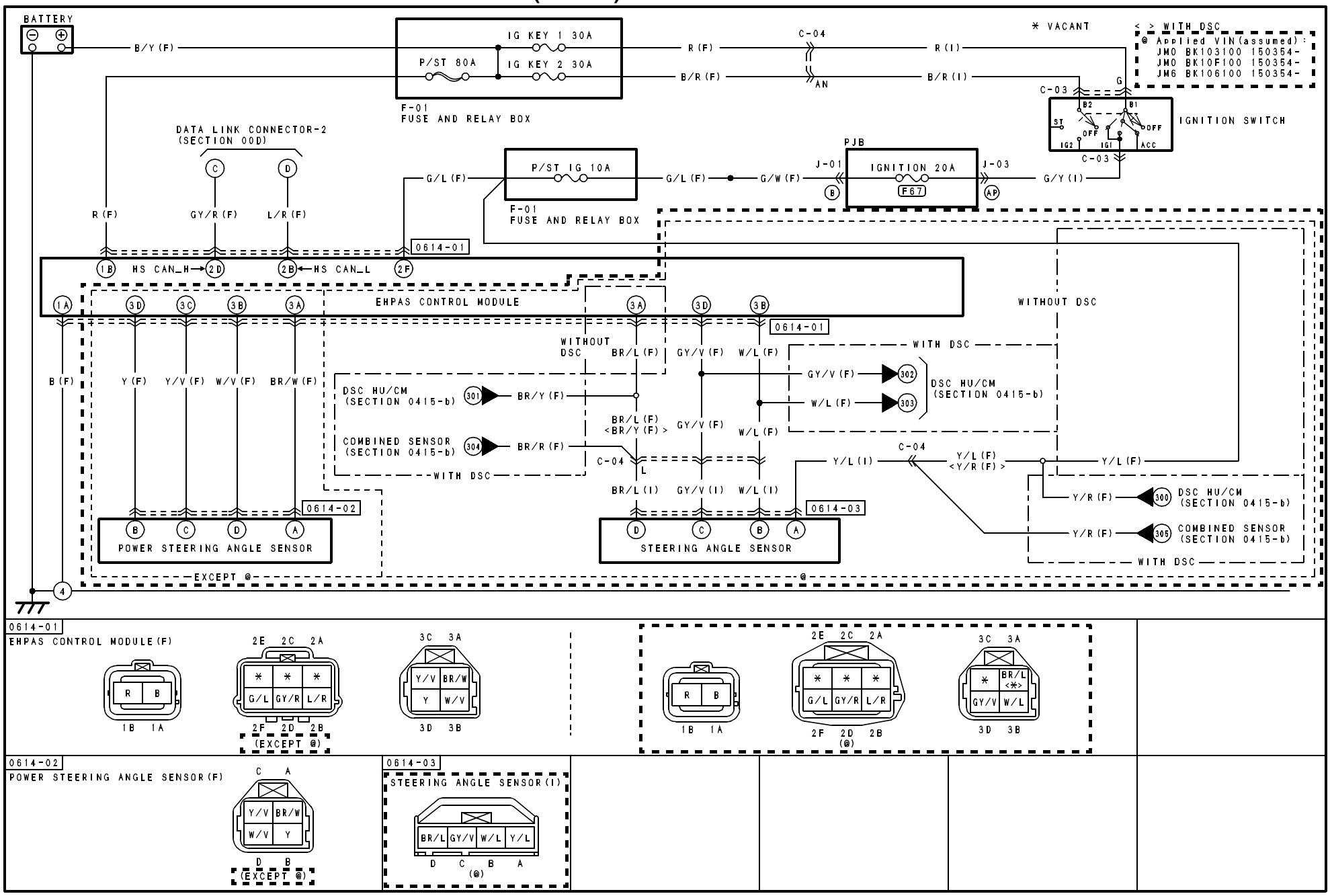
BATTERY
B/Y (F)
IG KEY 1 30A
P/ST 80A
IG KEY 2 30A
F-01
FUSE AND RELAY BOX
R (F)
B/R (F)
C-04
AN
R (I)
B/R (I)
* VACANT
< > WITH DSC
@ Applied VIN(assumed):
JM0 BK103100 150354-
JM0 BK10F100 150354-
JM6 BK106100 150354-
C-03
IGNITION SWITCH
DATA LINK CONNECTOR-2
(SECTION 00D)
P/ST IG 10A
G/L (F)
G/W (F)
PJB
IGNITION 20A
F67
J-01
J-03
G/Y (I)
GY/R (F)
L/R (F)
0614-01
HS CAN_H
HS CAN_L
EHPAS CONTROL MODULE
WITHOUT DSC
WITH DSC
B (F)
Y (F)
Y/V (F)
W/V (F)
BR/W (F)
DSC HU/CM
(SECTION 0415-b)
BR/Y (F)
COMBINED SENSOR
(SECTION 0415-b)
BR/R (F)
BR/L (F)
GY/V (F)
W/L (F)
BR/L (F)
<BR/Y (F)>
BR/L (I)
GY/V (I)
W/L (I)
Y/L (I)
Y/L (F)
<Y/R (F)>
Y/R (F)
0614-02
POWER STEERING ANGLE SENSOR
0614-03
STEERING ANGLE SENSOR
EXCEPT @
@
0614-01
EHPAS CONTROL MODULE (F)
(EXCEPT @)
0614-02
POWER STEERING ANGLE SENSOR (F)
(EXCEPT @)
0614-03
STEERING ANGLE SENSOR (I)
(@)

HARNESS SYMBOL : (F) (E) (R)

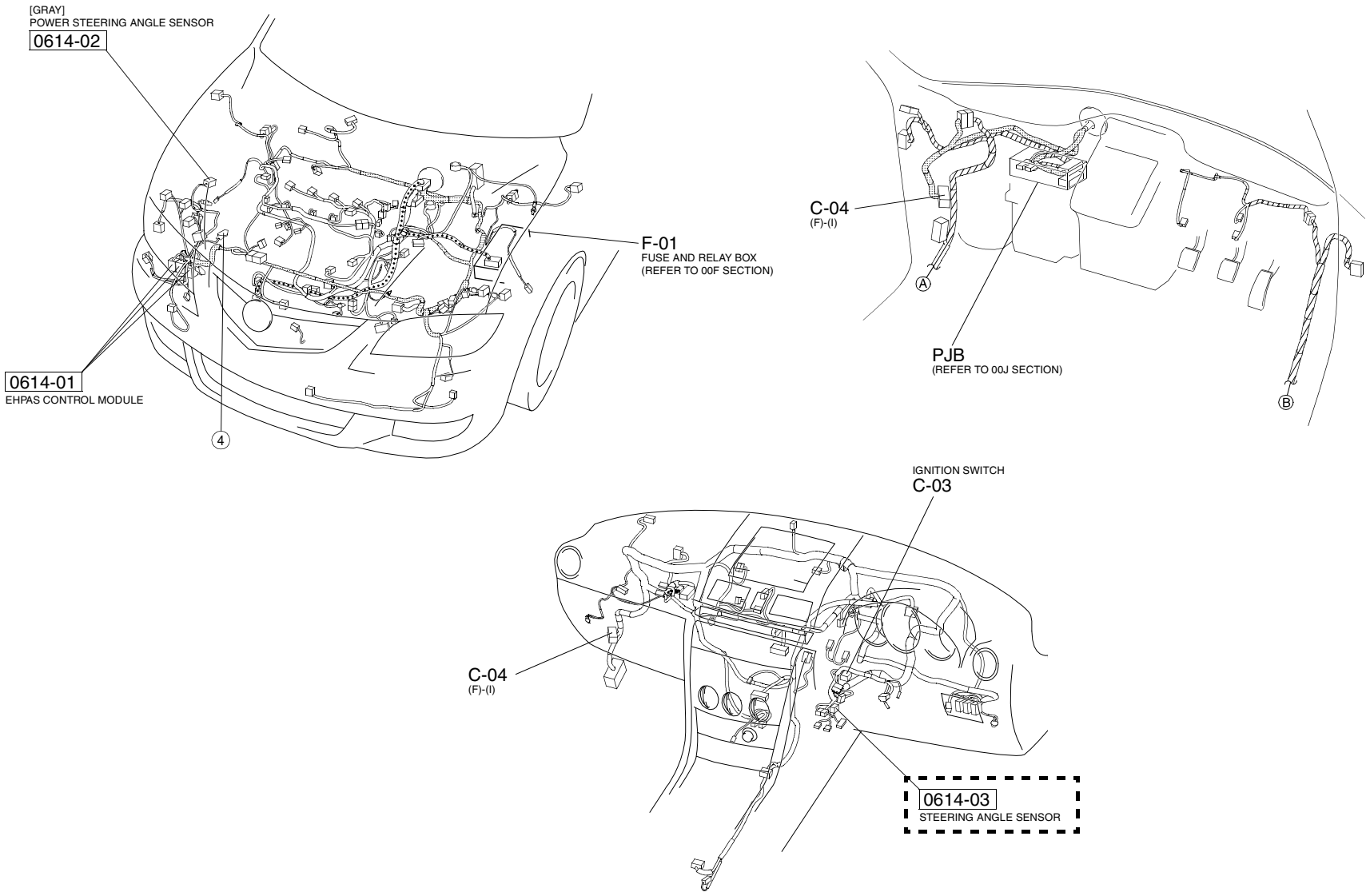

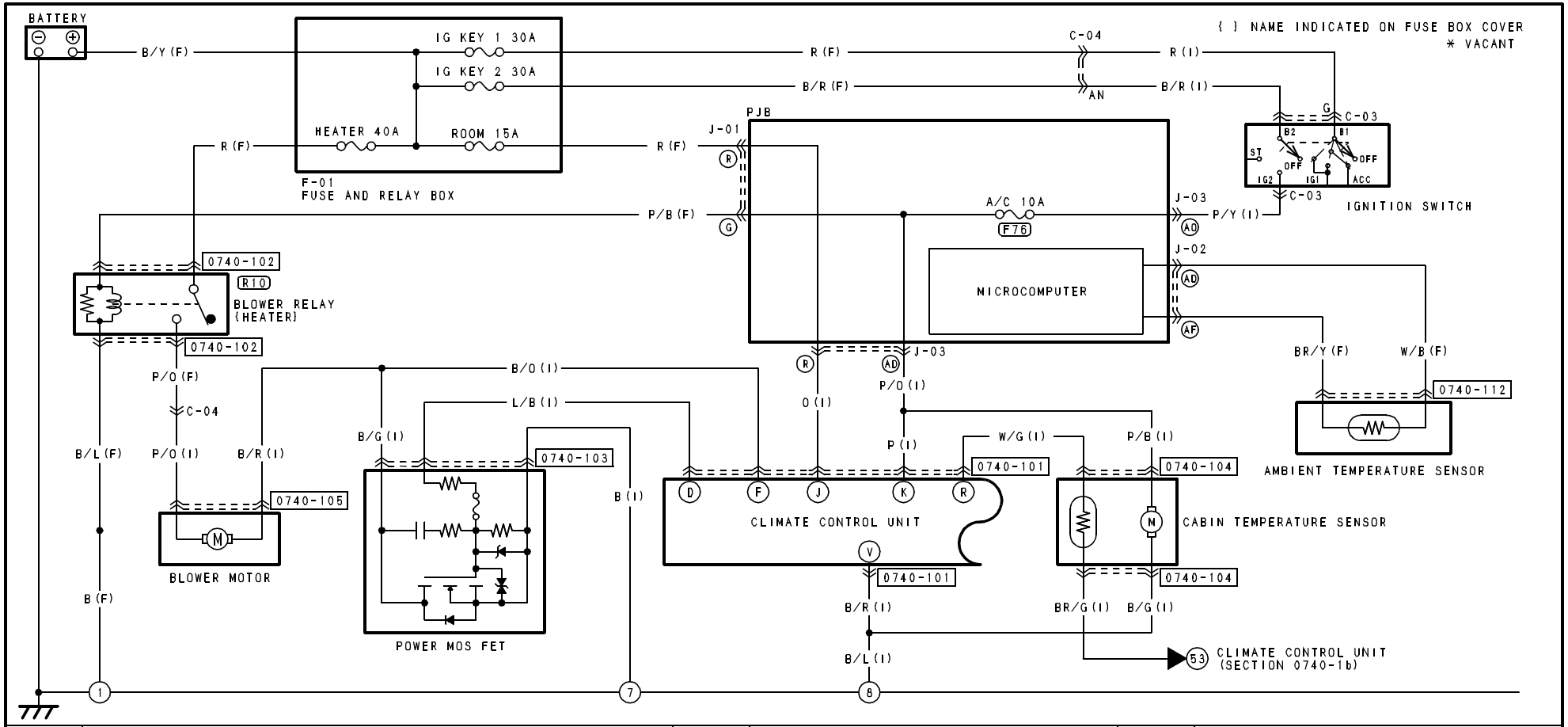

0740-101
CLIMATE CONTROL UNIT (I)

W	U	S	Q	O	M K		I	G	E	C	A
L	BR/G	W/L	Y/L	W/L	BR/L	P	B/Y	B/W	B/P	B/G	O/G
GY	B/R	W/R	W/G	L/W	G/Y	G/R	O	*	B/O	L/B	B
X	V	T	R	P	N	L	J	H	F	D	B

0740-102
BLOWER RELAY (F)

FRONT

	P/B	
P/O		R
	B/L	

NOTE: SEEN FROM TERMINAL SIDE

0740-103
POWER MOS FET (I)

*	L/B	B/G	B

0740-104
CABIN TEMPERATURE SENSOR (I)

W/G	B/G	BR/G	P/B

0740-105
BLOWER MOTOR (I)

P/O
B/R

0740-112
AMBIENT TEMPERATURE SENSOR (F)

BR/Y	W/B

HARNESS SYMBOL : (F) (E) (R)

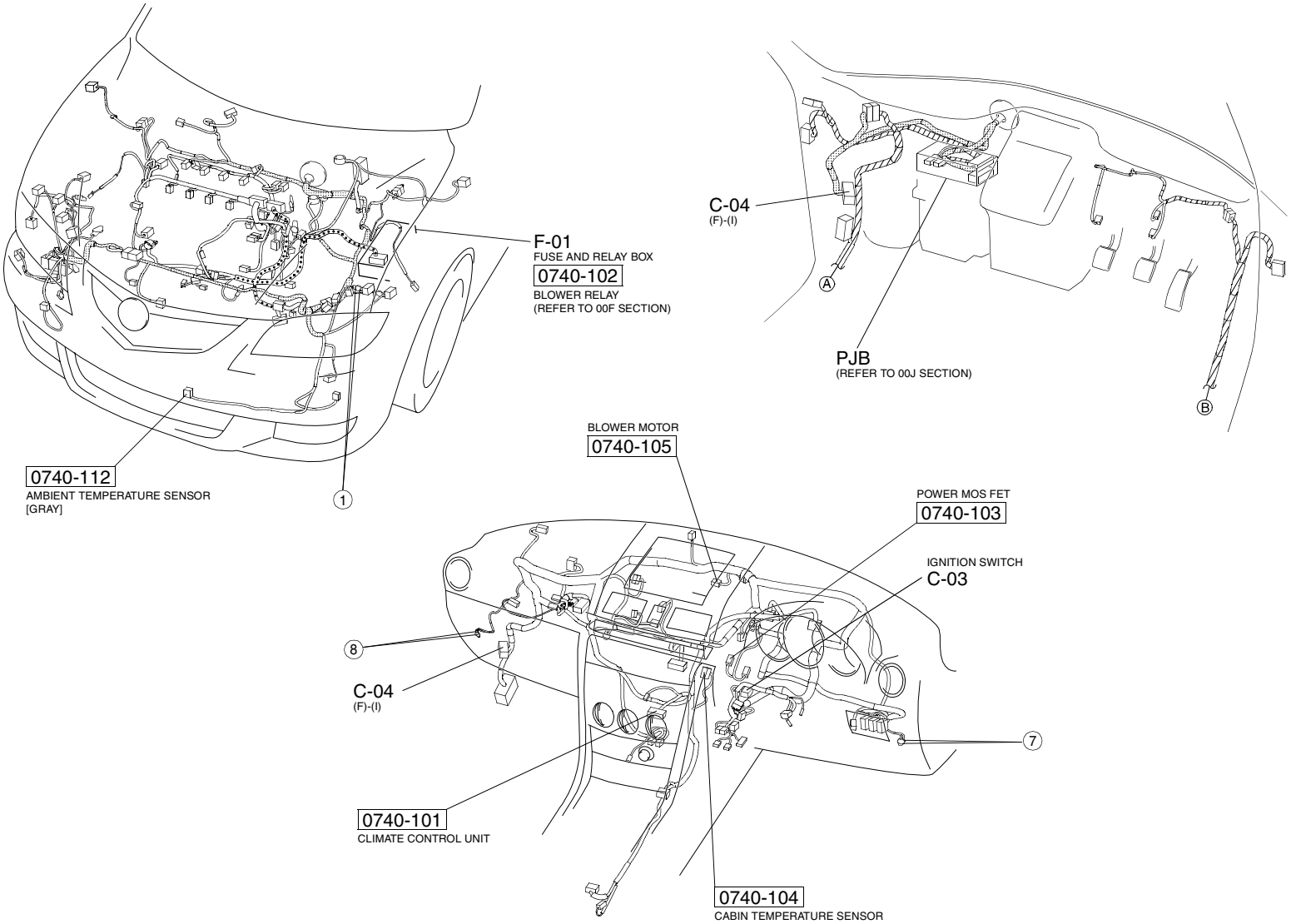

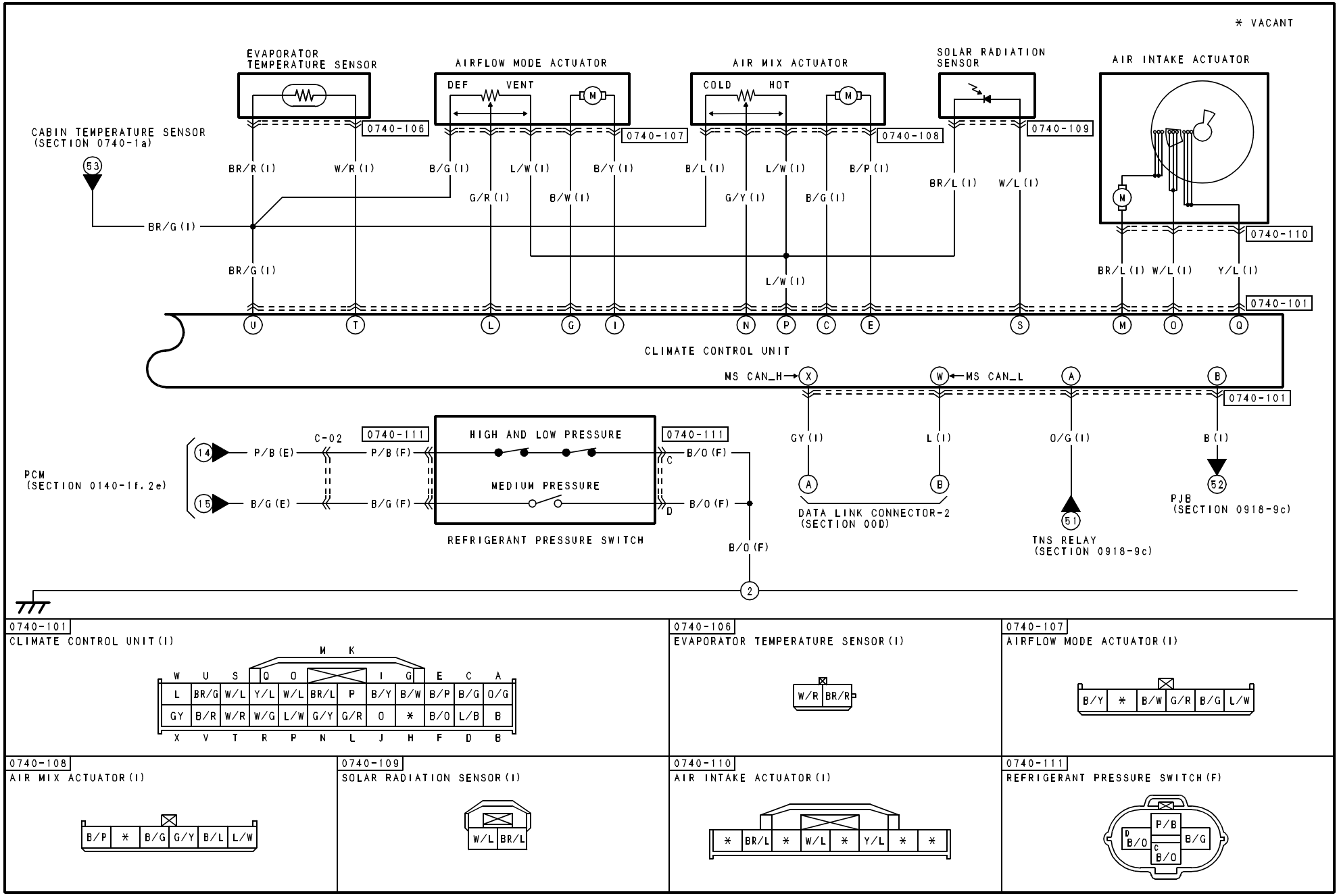

0740-101
CLIMATE CONTROL UNIT (I)

	W	U	S	Q	O	M	K	I	G	E	C	A
	L	BR/G	W/L	Y/L	W/L	BR/L	P	B/Y	B/W	B/P	B/G	O/G
	GY	B/R	W/R	W/G	L/W	G/Y	G/R	O	*	B/O	L/B	B
	X	V	T	R	P	N	L	J	H	F	D	B

0740-106
EVAPORATOR TEMPERATURE SENSOR (I)

W/R	BR/R

0740-107
AIRFLOW MODE ACTUATOR (I)

B/Y	*	B/W	G/R	B/G	L/W

0740-108
AIR MIX ACTUATOR (I)

B/P	*	B/G	G/Y	B/L	L/W

0740-109
SOLAR RADIATION SENSOR (I)

W/L	BR/L

0740-110
AIR INTAKE ACTUATOR (I)

*	BR/L	*	W/L	*	Y/L	*	*

0740-111
REFRIGERANT PRESSURE SWITCH (F)

	P/B	
D B/O		B/G
	C B/O	

HARNESS SYMBOL : (F) (E) (R)

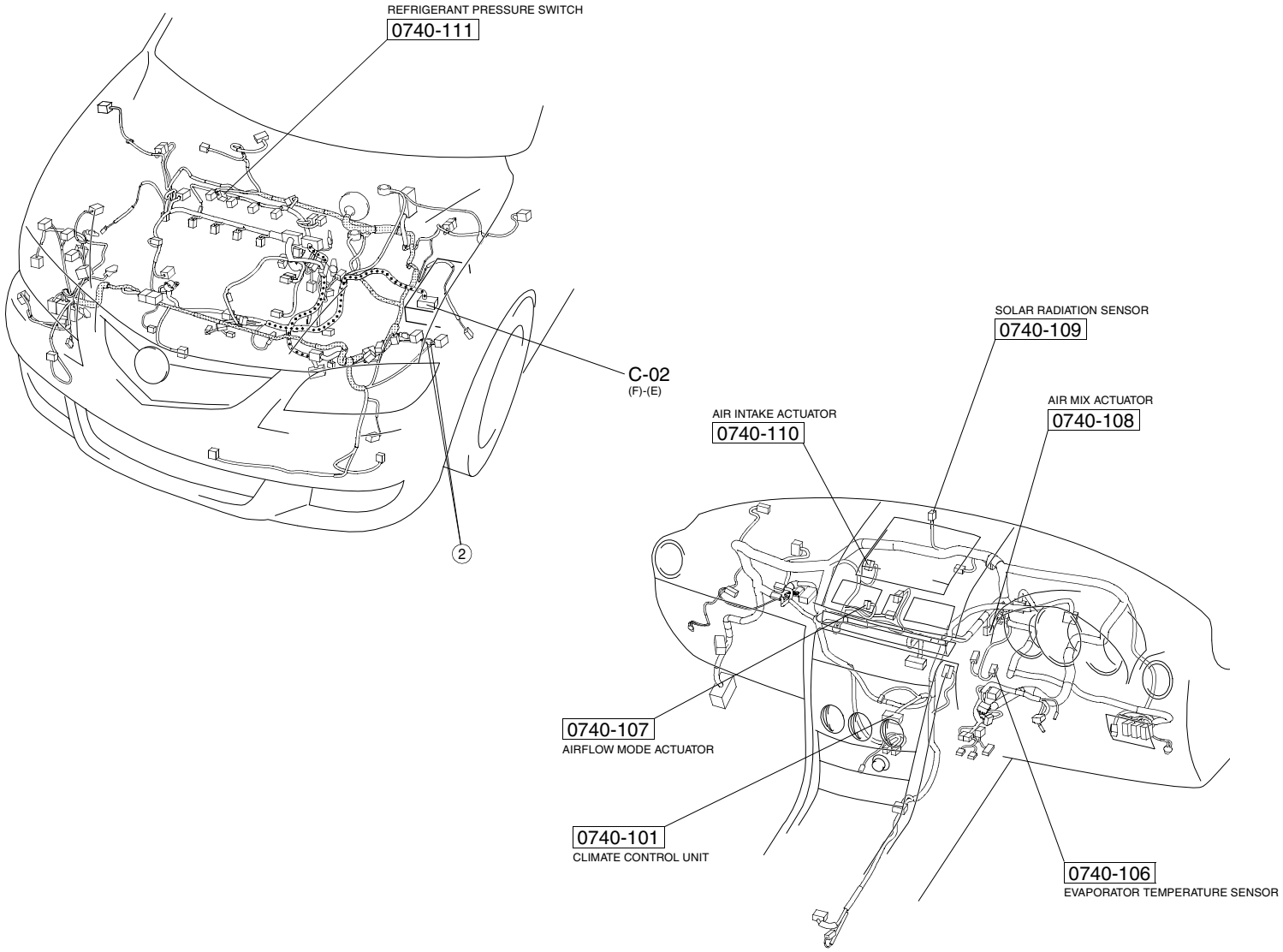

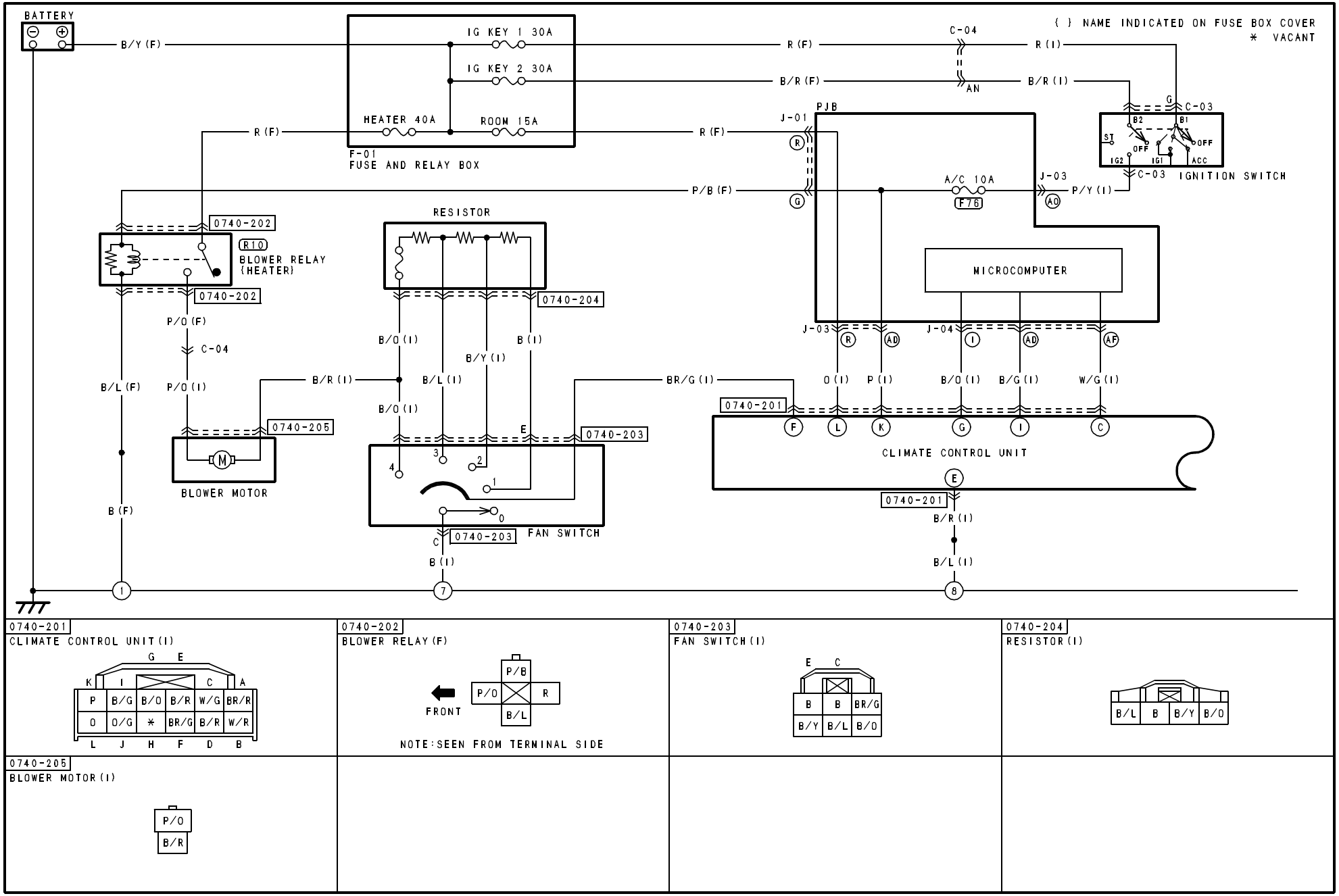

0740-201
CLIMATE CONTROL UNIT (I)

K	I	G	E	C	A
P	B/G	B/O	B/R	W/G	BR/R
O	O/G	*	BR/G	B/R	W/R
L	J	H	F	D	B

0740-202
BLOWER RELAY (F)

FRONT

	P/B	
P/O		R
	B/L	

NOTE: SEEN FROM TERMINAL SIDE

0740-203
FAN SWITCH (I)

E	C
B	BR/G
B/Y	B/O

0740-204
RESISTOR (I)

B/L	B	B/Y	B/O

0740-205
BLOWER MOTOR (I)

P/O
B/R

HARNESS SYMBOL : (F) (E) (R)

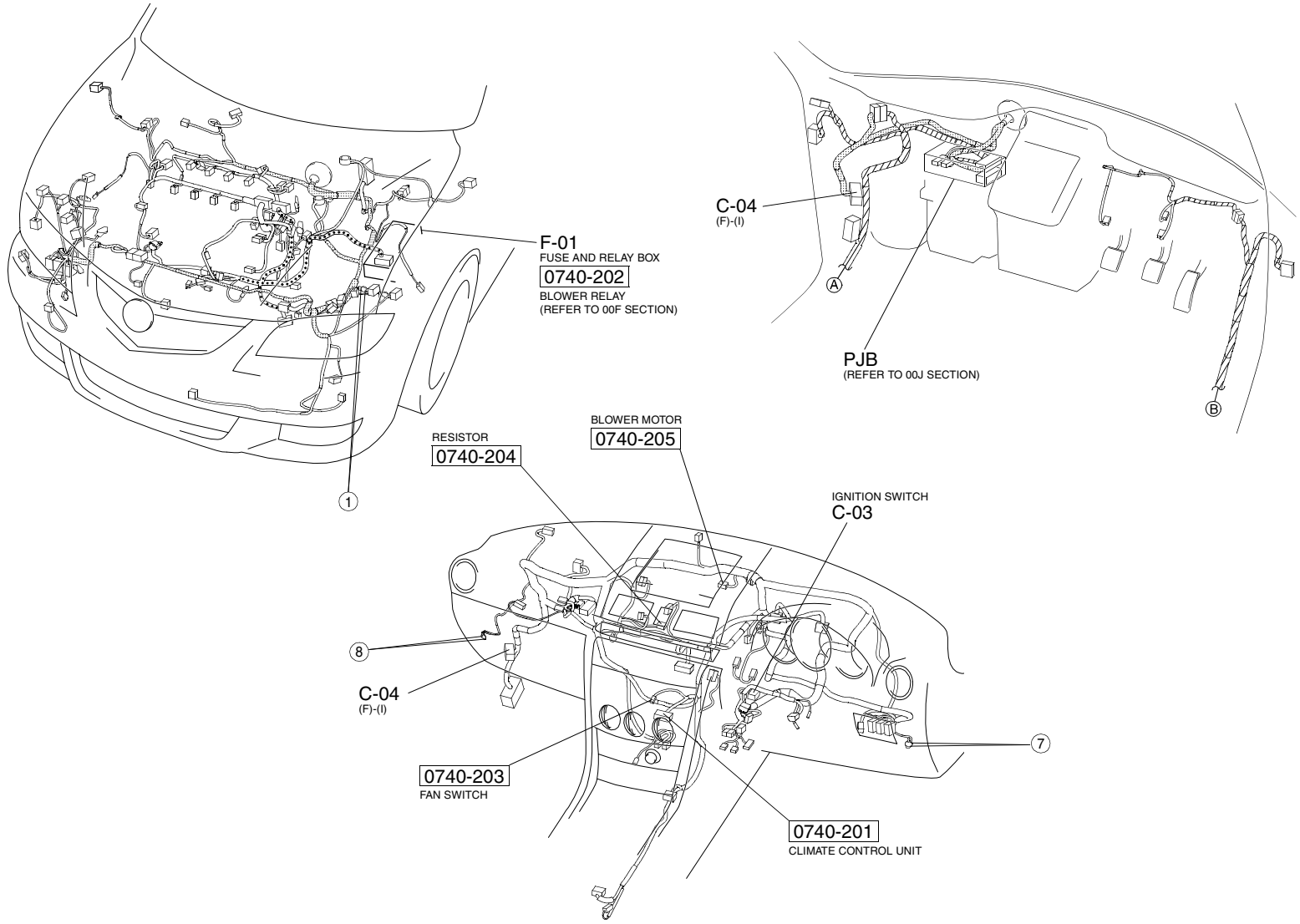

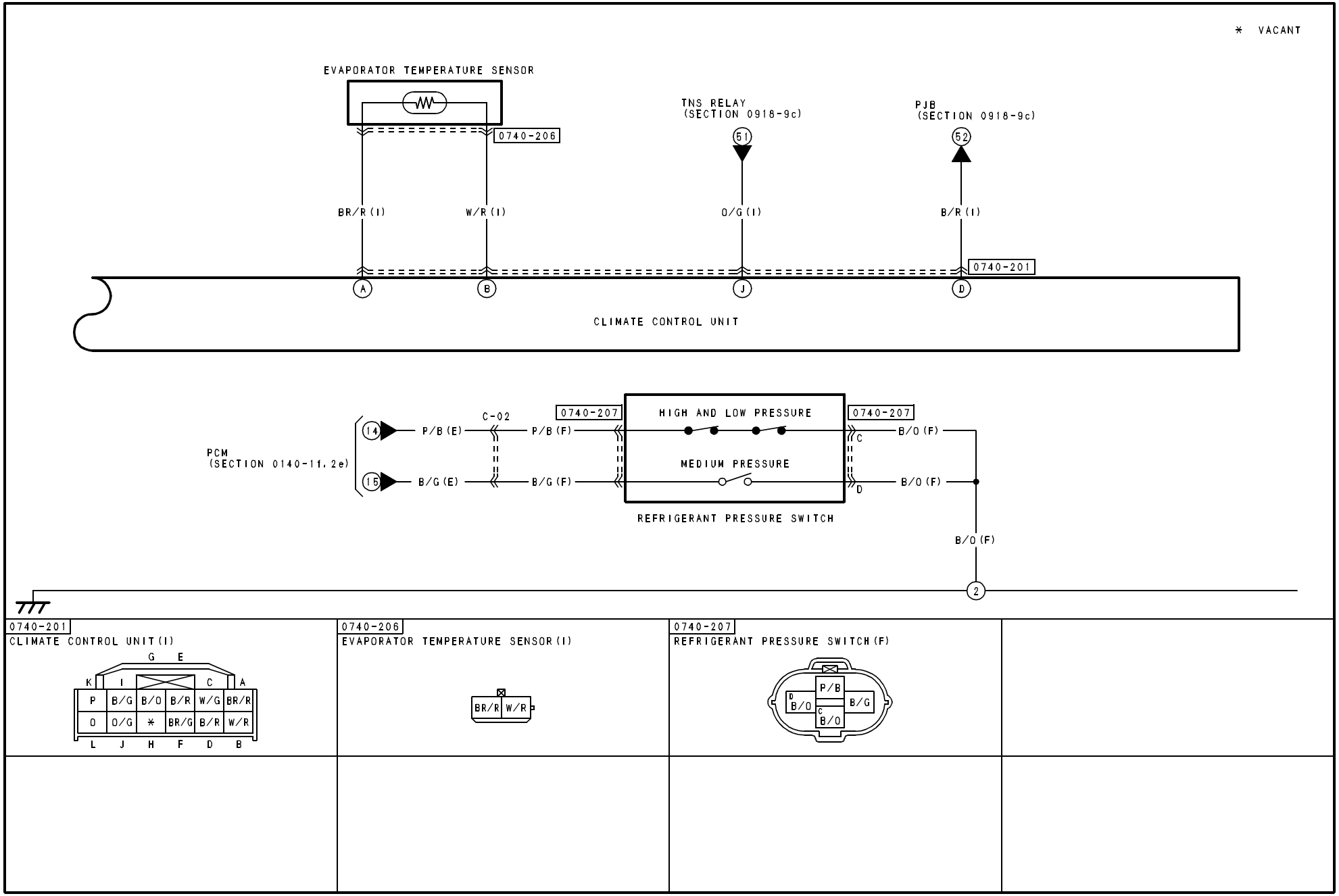
* VACANT
EVAPORATOR TEMPERATURE SENSOR
0740-206
TNS RELAY
(SECTION 0918-9c)
51
PJB
(SECTION 0918-9c)
52
BR/R (I)
W/R (I)
O/G (I)
B/R (I)
0740-201
A
B
J
D
CLIMATE CONTROL UNIT
PCM
(SECTION 0140-11, 2e)
14
15
P/B (E)
B/G (E)
C-02
P/B (F)
B/G (F)
0740-207
HIGH AND LOW PRESSURE
MEDIUM PRESSURE
C
D
B/O (F)
REFRIGERANT PRESSURE SWITCH
2
0740-201
CLIMATE CONTROL UNIT (I)
G E
K I C A
P B/G B/O B/R W/G BR/R
O O/G * BR/G B/R W/R
L J H F D B
0740-206
EVAPORATOR TEMPERATURE SENSOR (I)
BR/R W/R
0740-207
REFRIGERANT PRESSURE SWITCH (F)
P/B
D B/O
B/G
C B/O

HARNESS SYMBOL : (F) (E) (R)

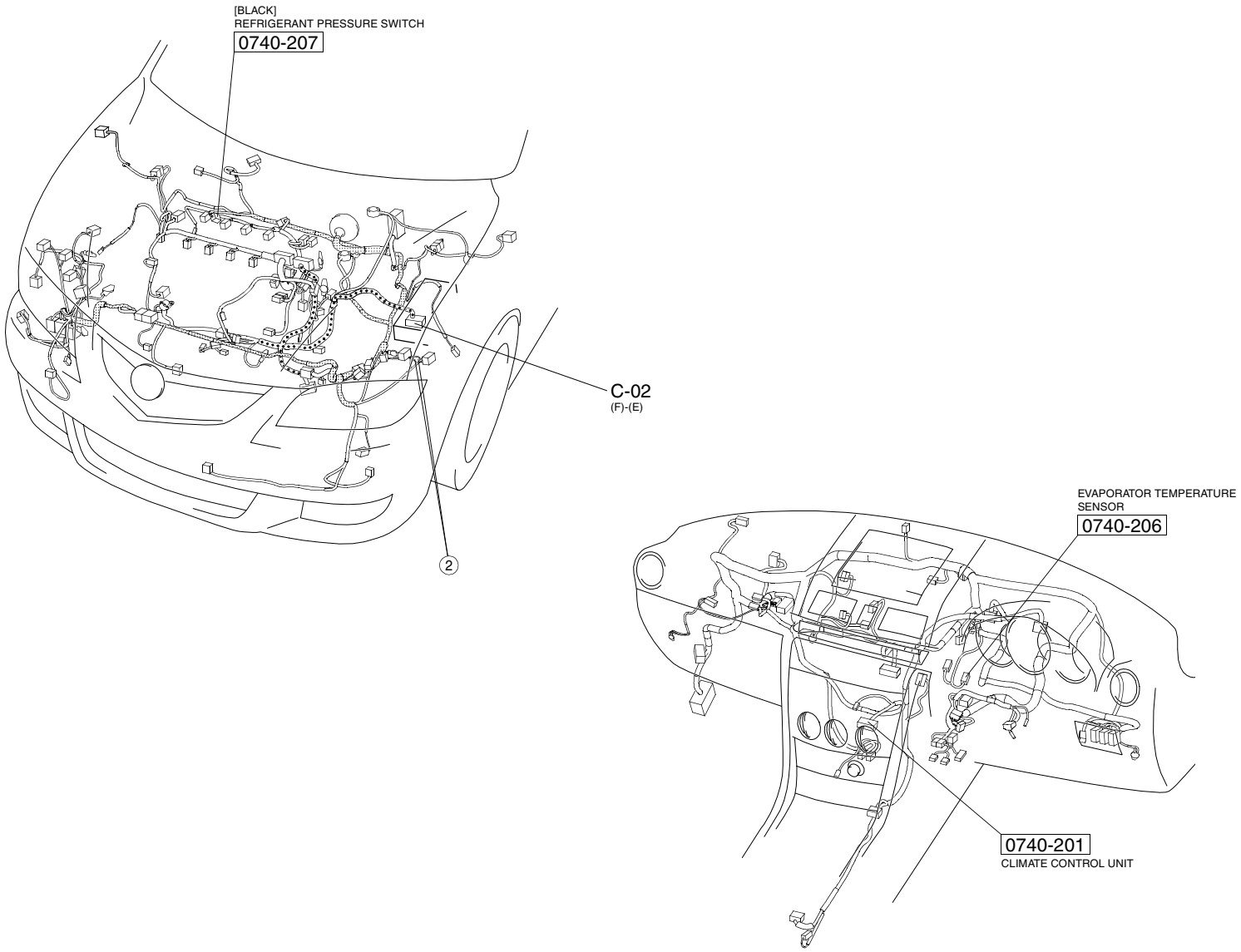

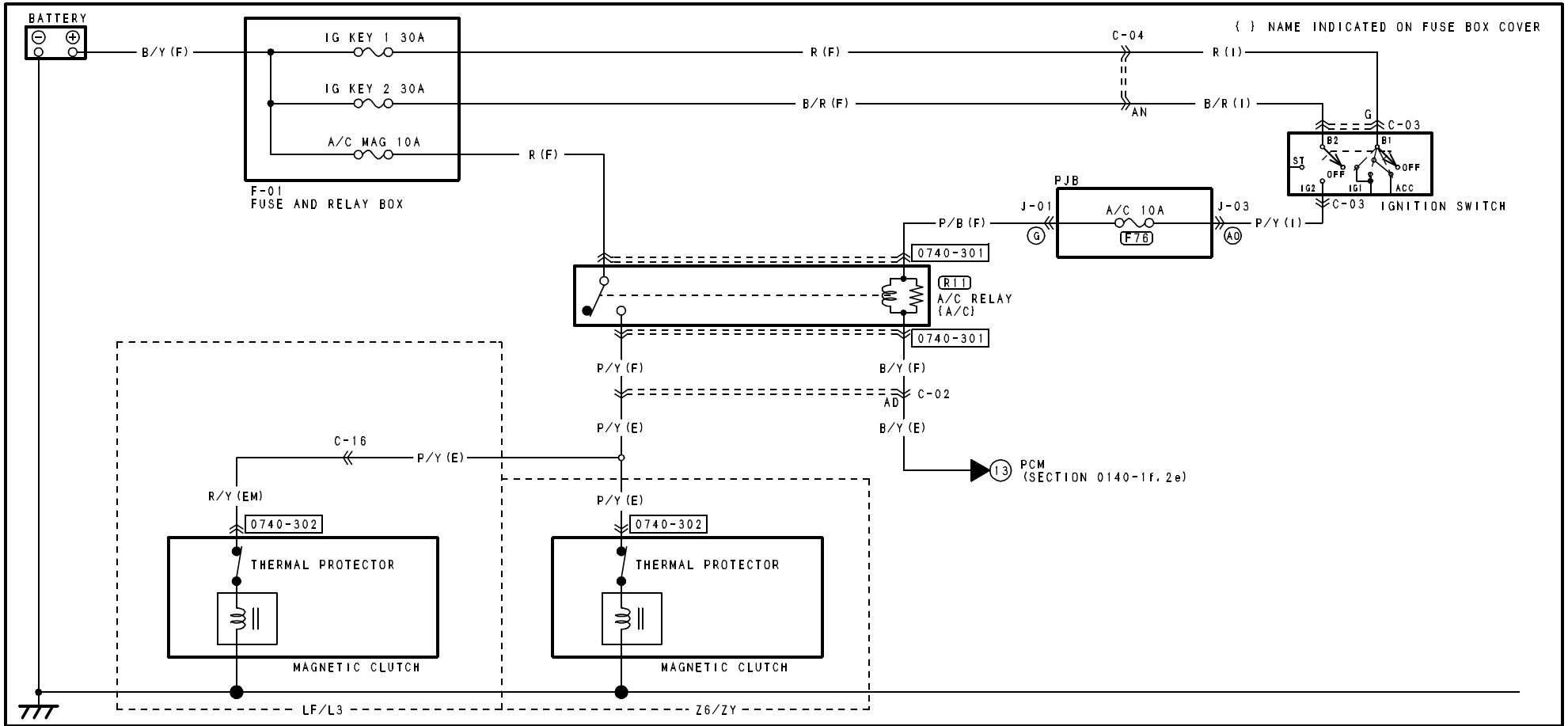
BATTERY
B/Y (F)
IG KEY 1 30A
IG KEY 2 30A
A/C MAG 10A
F-01
FUSE AND RELAY BOX
R (F)
B/R (F)
R (F)
C-04
AN
R (I)
B/R (I)
{ } NAME INDICATED ON FUSE BOX COVER
G
C-03
B2
B1
ST
OFF
OFF
IG2
IG1
ACC
C-03
IGNITION SWITCH
PJB
J-01
A/C 10A
F76
J-03
P/B (F)
P/Y (I)
0740-301
R11
A/C RELAY
(A/C)
0740-301
P/Y (F)
B/Y (F)
AD
C-02
P/Y (E)
B/Y (E)
C-16
P/Y (E)
PCM
(SECTION 0140-1f, 2e)
R/Y (EM)
P/Y (E)
0740-302
0740-302
THERMAL PROTECTOR
THERMAL PROTECTOR
MAGNETIC CLUTCH
MAGNETIC CLUTCH
LF/L3
Z6/ZY
0740-301
A/C RELAY (F)
B/Y
P/B
P/Y
R
FRONT
NOTE:SEEN FROM TERMINAL SIDE
0740-302
MAGNETIC CLUTCH
(EM)
R/Y
(LF/L3)
(E)
P/Y
(Z6/ZY)

HARNESS SYMBOL : (F) (E) (R)

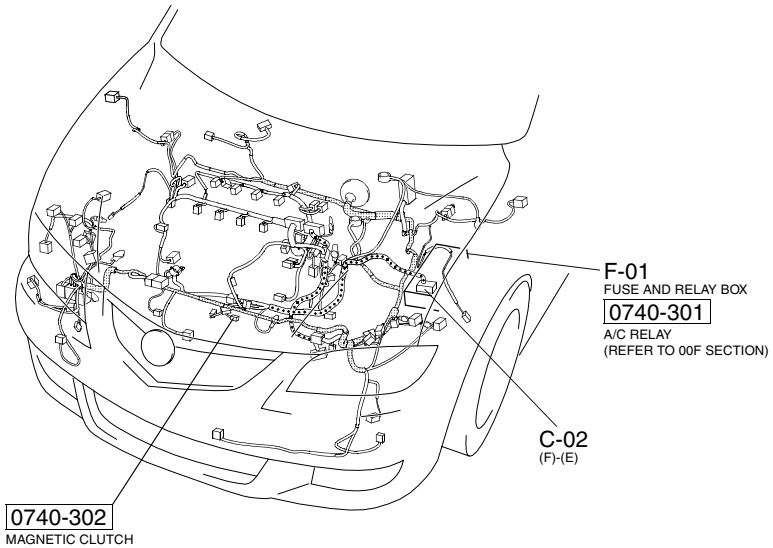

[Z6, ZY]

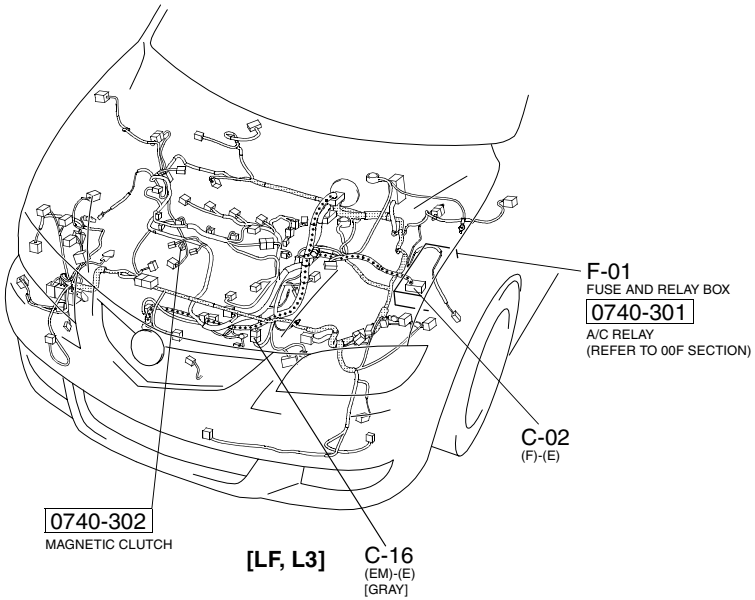

[LF, L3]

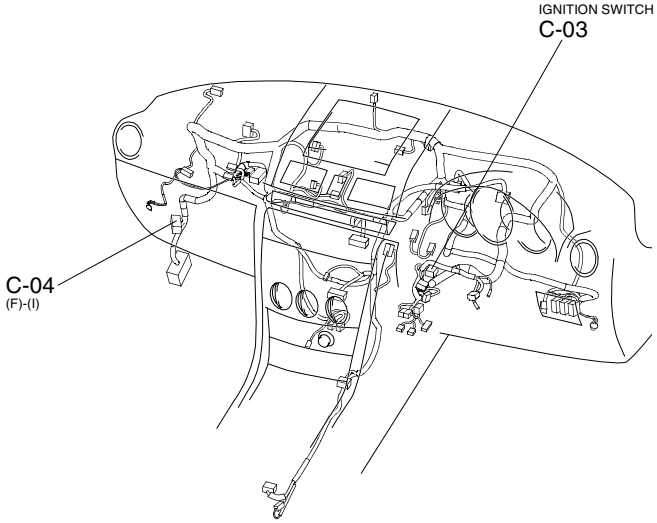

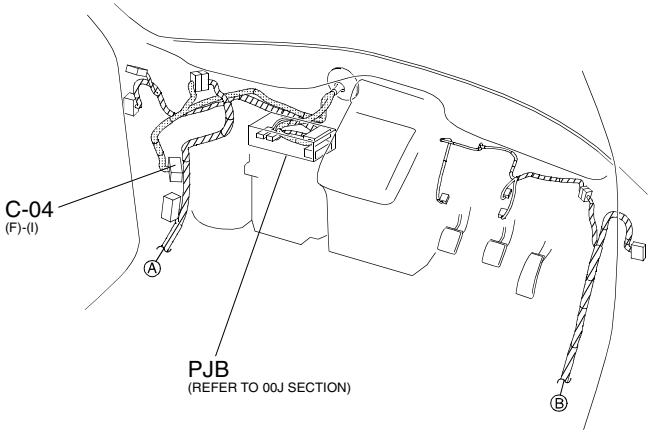

AIR BAG SYSTEM

SERVICE WARNINGS

B3E081001046W02

Air Bag Module Inspection

- Inspecting an air bag module using a tester can operate (deploy) the air bag module, which may cause serious injury. Do not use a tester to inspect an air bag module. Always use the on-board diagnostic function to diagnose the air bag module for malfunctions.

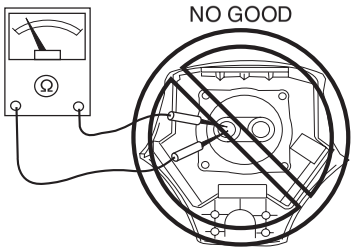

CHU0810W600

Air Bag Module Handling

- Handling a live (undeployed) air bag module that is pointed toward your body could result in serious injury if the air bag module were to accidentally operate (deploy). When carrying a live (undeployed) air bag module, point the deployment surface away from your body to lessen the chance of injury in case it operates (deploys).

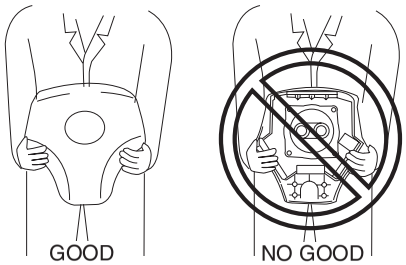

CHU0810W601

- A live (undeployed) air bag module placed with its deployment surface to ground is dangerous. If the air bag module were to accidentally operate (deploy), it could cause serious injury. Always place a live (undeployed) air bag module with its deployment surface up.

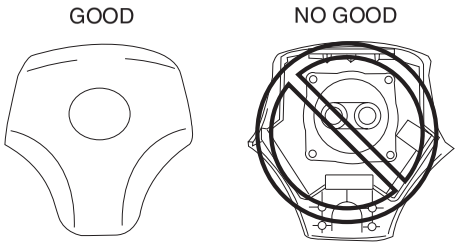

CHU0810W602

Side Air Bag Module Handling

- When a side air bag module operates (deploys) due to a collision, the interior of the seat back (pad, frame, trim) may become damaged. If a side air bag does not operate (deploy) normally from a seat back that has been reused, a serious accident may result. After a side air bag has operated (deployed), always replace both the side air bag module and the seat back (pad, frame, trim) with new parts. After servicing, verify that the seat operates normally and that the wiring harness is not caught.

SAS Control Module Handling

- Removing the SAS control module or disconnecting the SAS control module connector with the ignition switch at the ON position can activate the sensor in the SAS control module and operate (deploy) the air bags and pre-tensioner front buckles, which may cause serious injury. Before removing the SAS control module or disconnecting the SAS control module connector, always turn the ignition switch to the LOCK position, disconnect the negative battery cable, and then wait for 1 min or more to allow the backup power supply of the SAS control module to deplete its stored power.
- Connecting the SAS control module connector with the SAS control module not securely fixed to the vehicle is dangerous. The sensor in the SAS control module could send an electrical signal to the air bag modules and pre-tensioner front buckles. This will operate (deploy) the air bags and pre-tensioner front buckles, which may result in serious injury. Therefore, before connecting the connector, securely fix the SAS control module to the vehicle.
- Because a sensor is built into the SAS control module, once the air bags and pre-tensioner front buckles have operated (deployed) due to a collision or other causes, the SAS control module must be replaced with a new one even if the used one does not have any visible external damage or deformation. The used SAS control module may have been damaged internally, which may cause improper operation. If the SAS control module is reused, the air bags and pre-tensioner front buckles may not operate (deploy) normally, which could result in a serious accident. Always replace the SAS control module with a new one. The SAS control module cannot be bench-checked or self-checked.

Crash Zone Sensor Handling

- Removing the crash zone sensor or disconnecting the crash zone sensor connector with the ignition switch at the ON position can activate the crash zone sensor and operate (deploy) the air bags and pre-tensioner front buckles, which may cause serious injury. Before removing the crash zone sensor or disconnecting the crash zone sensor connector, always turn the ignition switch to the LOCK position, disconnect the negative battery cable, and then wait for 1 min or more to allow the backup power supply of the SAS control module to deplete its stored power.
- If the crash zone sensor is subjected to shock or the sensor is disassembled, the air bags and pre-tensioner front buckles may accidentally operate (deploy) and cause injury, or the system may fail to operate normally and cause a serious accident. Do not subject the crash zone sensor to shock or disassemble the sensor.
- Because a sensor is built into the crash zone sensor, once the air bags and pre-tensioner front buckles have operated (deployed) due to a collision or other causes, the crash zone sensor must be replaced with a new one even if the used one does not have any visible external damage or deformation. If the crash zone sensor is reused, the air bags and pre-tensioner front buckles may not operate (deploy) normally, which could result in a serious accident. Always replace the crash zone sensor with a new one. The crash zone sensor cannot be bench-checked or self-checked.

Side Air Bag Sensor Handling

- Removing the side air bag sensor or disconnecting the side air bag sensor connector with the ignition switch at the ON position can activate the side air bag sensor and operate (deploy) the side air bag, which may cause serious injury. Before removing the side air bag sensor or disconnecting the side air bag sensor connector, always turn the ignition switch to the LOCK position, disconnect the negative battery cable, and then wait for 1 min or more to allow the backup power supply of the SAS control module to deplete its stored power.
- If the side air bag sensor is subjected to shock or the sensor is disassembled, the side air bag may accidentally operate (deploy) and cause injury, or the system may fail to operate normally and cause a serious accident. Do not subject the side air bag sensor to shock or disassemble the sensor.
- Because a sensor is built into the side air bag sensor, once the air bag has operated (deployed) due to a collision or other causes, the side air bag sensor must be replaced with a new one even if the used one does not have any visible external damage or deformation. If the side air bag sensor is reused, the side air bag may not operate (deploy) normally, which could result in a serious accident. Always replace the side air bag sensor with a new one. The side air bag sensor cannot be bench-checked or self-checked.

Pre-tensioner Front Buckle Inspection

- Inspecting a pre-tensioner front buckle using a tester can operate (deploy) the pre-tensioner front buckle, which may cause serious injury. Do not use a tester to inspect a pre-tensioner front buckle. Always use the on-board diagnostic function to diagnose the pre-tensioner front buckle for malfunctions.

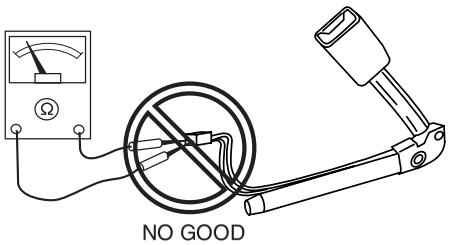

B3E0810W002

SERVICE CAUTIONS

B3E081001046W03

Air Bag System Component Disassembly

- Disassembling the air bag system components could cause it to not operate (deploy) normally. Never disassemble any air bag system components.

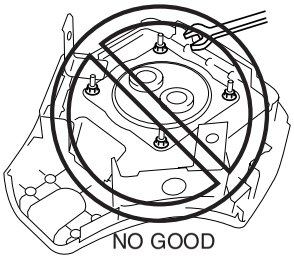

CHU0810W604

Air Bag Module, Pre-tensioner Front Buckle Handling

- Oil, grease, or water on the air bag modules may cause the air bags and pre-tensioner front buckles to fail to operate (deploy) in an accident. Never allow oil, grease, or water to get on the air bag modules or pre-tensioner front buckles.
- Inserting a screwdriver or similar object into the connector of an air bag module or a pre-tensioner front buckle may damage the connector and cause the air bag module or the pre-tensioner front buckle to operate (deploy) improperly, which may cause serious injury. Never insert any foreign objects into the air bag module or seat belt connectors.

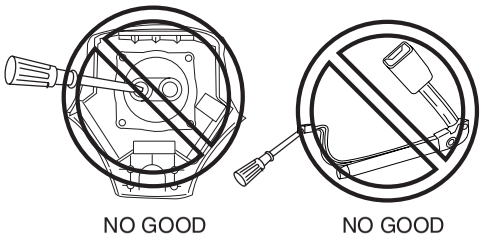

B3E0810W003

Air Bag Module, Pre-tensioner Front Buckle Reuse

- Even if an air bag module or a pre-tensioner front buckle does not operate (deploy) in a collision and does not have any external signs of damage, it may have been damaged internally, which may cause improper operation. Before reusing a live (undeployed) air bag module and the pre-tensioner front buckles, always use the on-board diagnostic to diagnose the air bag module and the pre-tensioner front buckles to verify that they have no malfunction.

Air Bag Wiring Harness Repair

- Incorrectly repairing an air bag wiring harness can accidentally operate (deploy) the air bag module and pre-tensioner front buckles. If a problem is found in the air bag wiring harness, always replace the wiring harness with a new one.

CHU0810W606

AIR BAG SYSTEM (INCLUDES PRE-TENSIONER SEAT BELT INFORMATION)

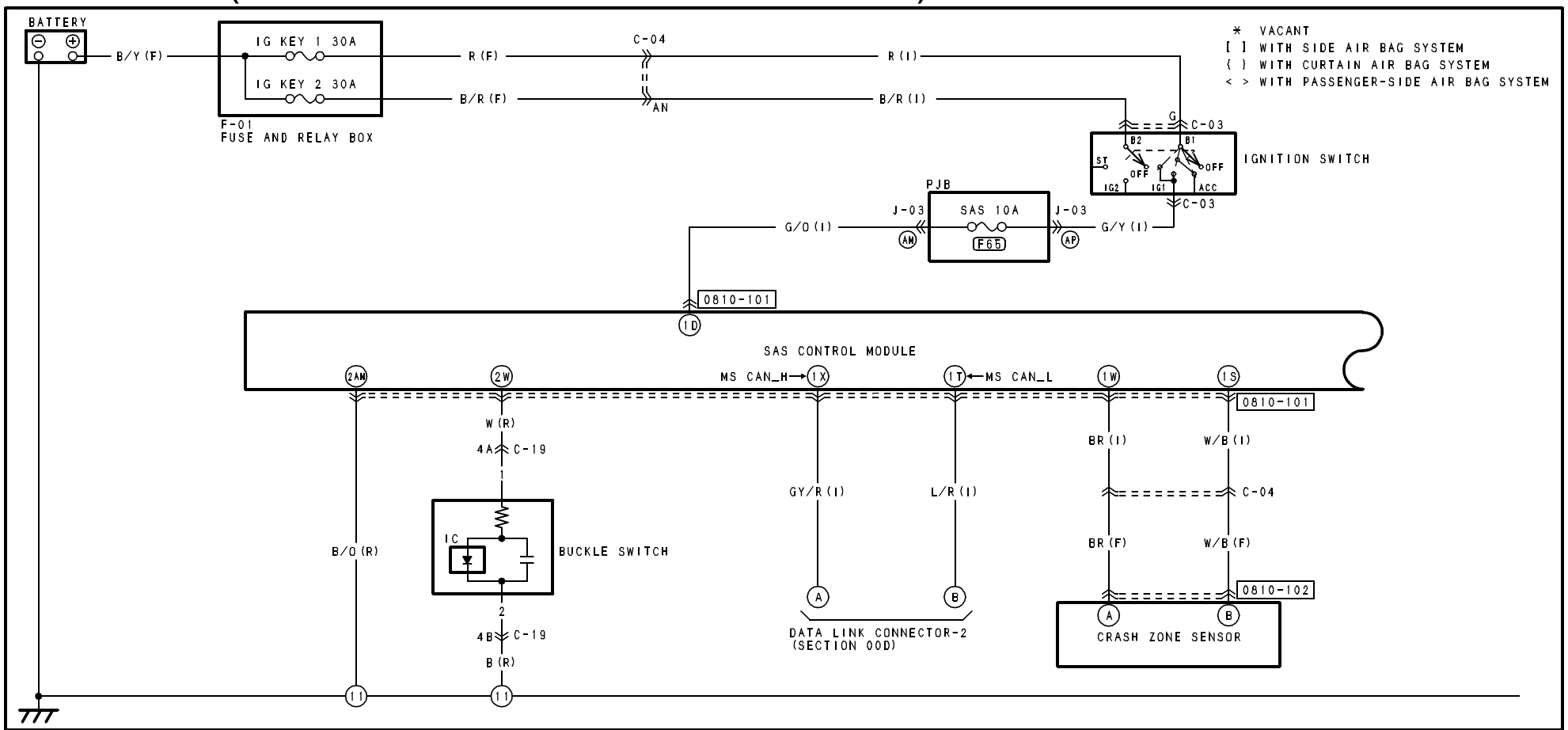

0810-101
SAS CONTROL MODULE

(I)

1U B/O	1Q G/R	1M G/B	1I B/G	1E *	1A *
1V * <B/Y>	1R * <G/Y>	1N * <G/W>	1J * <B/W>	1F *	1B *
1W BR	1S W/B	1O *	1K *	1G *	1C *
1X GY/R	1T L/R	1P *	1L *	1H *	1D G/O

(R)

2AK * {B/R}	2AG * {G/O}	2AC *	2Y *	2U *	2Q *	2M * [G/W]	2I * [B/W]	2E B/R	2A G/O
2AL * {B/L}	2AH * {G/L}	2AD *	2Z *	2V *	2R *	2N G/L	2J B/L	2F * [B/G]	2B * [G/B]
2AM B/O	2AI *	2AE *	2AA *	2W W	2S * [W]	2O * [BR]	2K * [BR/W]	2G * [W/V]	2C *
2AN *	2AJ *	2AF *	2AB *	2X *	2T *	2P *	2L *	2H *	2D *

0810-102
CRASH ZONE SENSOR (F)

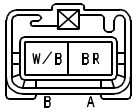

HARNESS SYMBOL : (F) (E) (R)

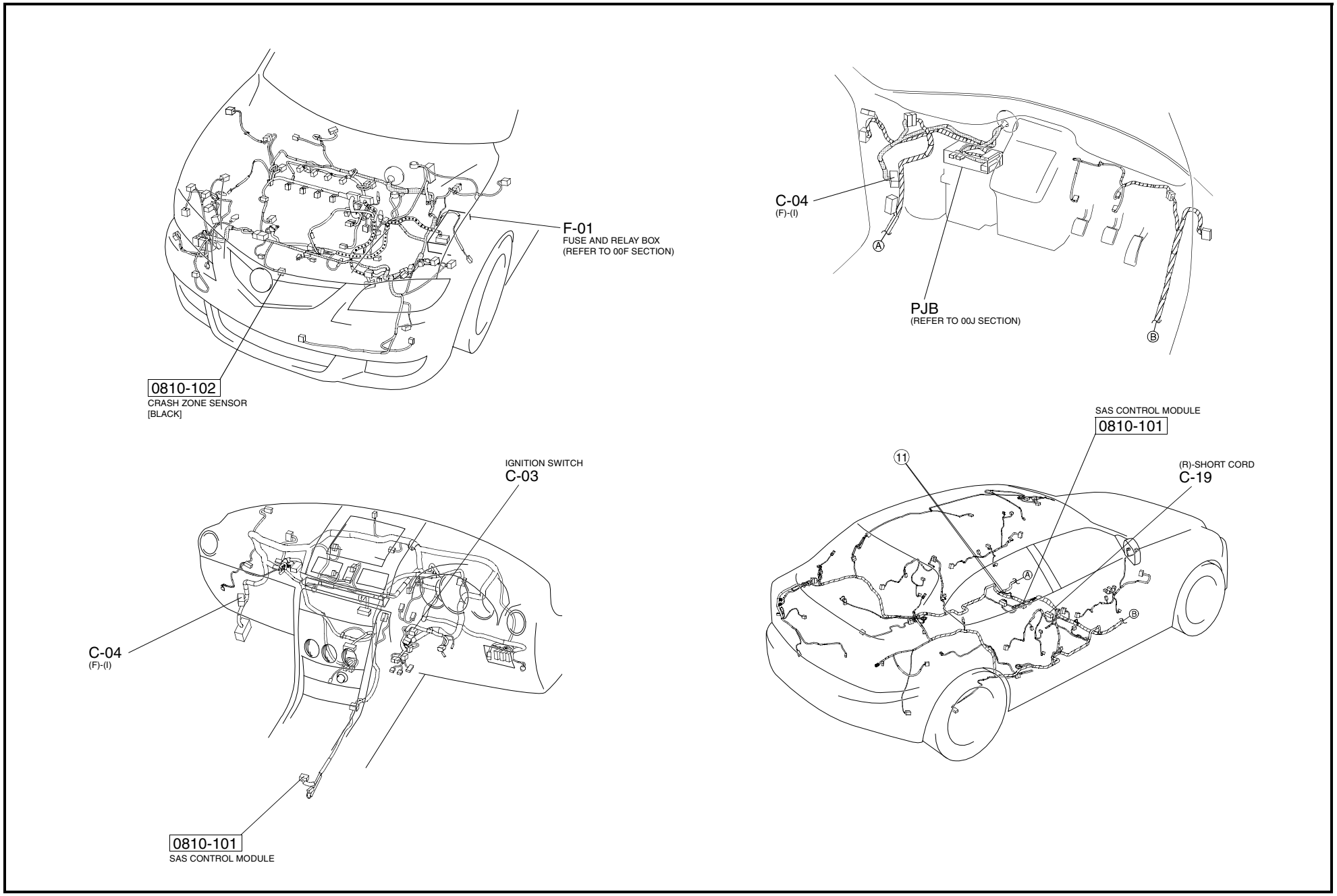

AIR BAG SYSTEM (INCLUDES PRE-TENSIONER SEAT BELT INFORMATION)

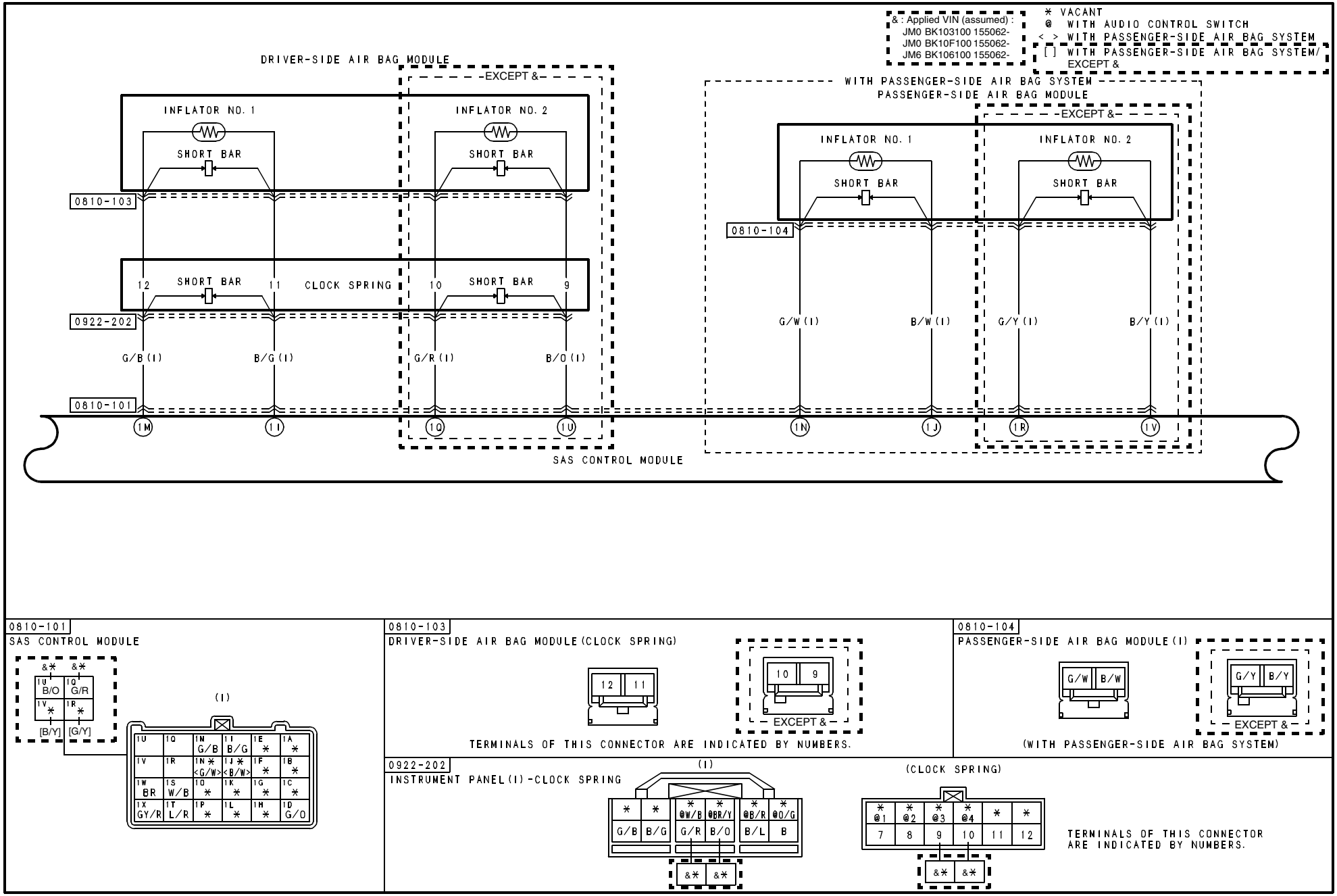

HARNESS SYMBOL : (F) (E) (R)

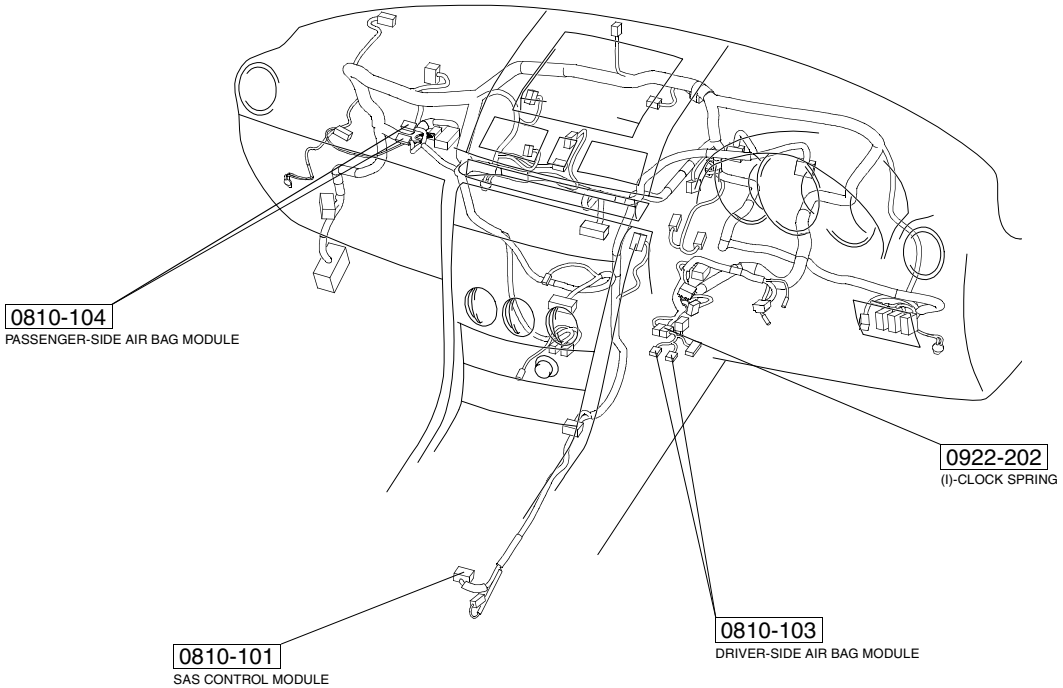

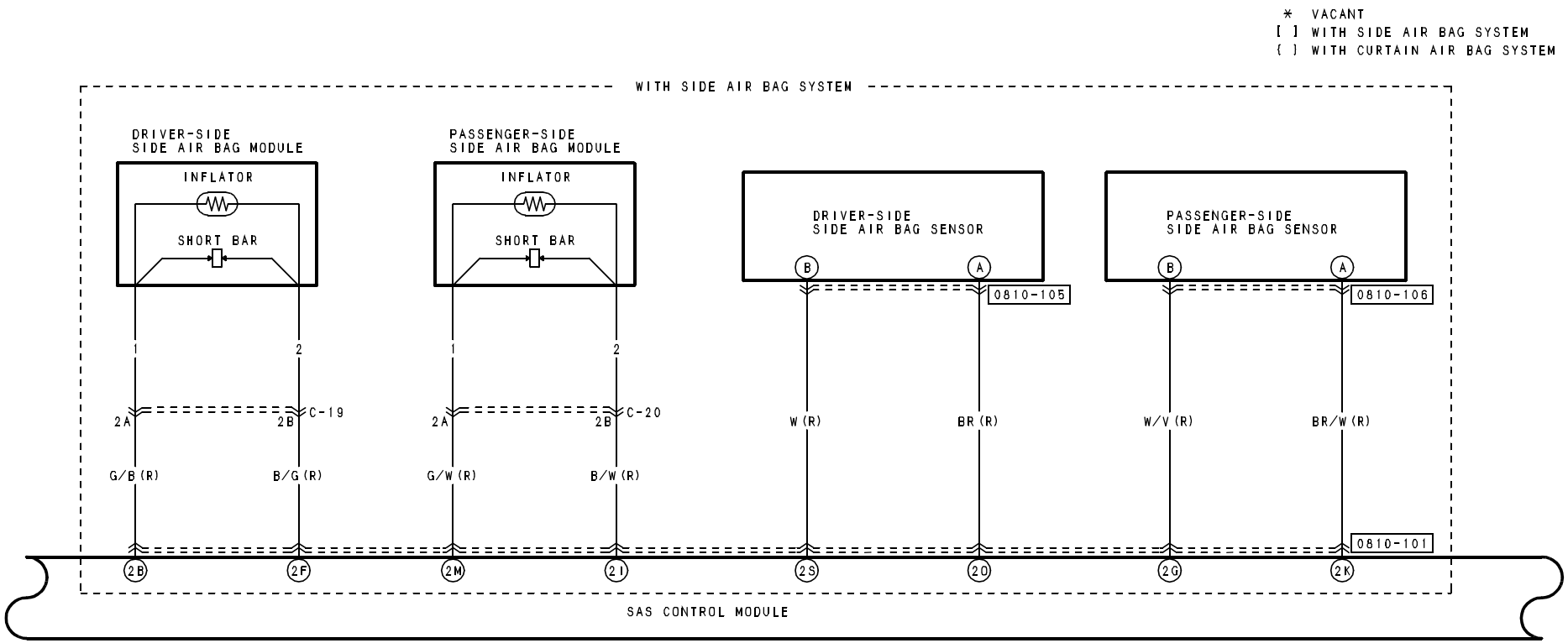

0810-101

SAS CONTROL MODULE

(R)

2AK * {B/R}	2AG * {G/O}	2AC *	2Y *	2U *	2Q *	2M * [G/W]	2I * [B/W]	2E B/R	2A G/O
2AL * {B/L}	2AH * {G/L}	2AD *	2Z *	2V *	2R *	2N G/L	2J B/L	2F * [B/G]	2B * [G/B]
2AM B/O	2AI *	2AE *	2AA *	2W W	2S * [W]	2O * [BR]	2K * [BR/W]	2G * [W/V]	2C *
2AN *	2AJ *	2AF *	2AB *	2X *	2T *	2P *	2L *	2H *	2D *

0810-105

DRIVER-SIDE SIDE AIR BAG SENSOR (R)

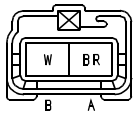

(WITH SIDE AIR BAG SYSTEM)

0810-106

PASSENGER-SIDE SIDE AIR BAG SENSOR (R)

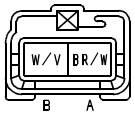

(WITH SIDE AIR BAG SYSTEM)

HARNESS SYMBOL : (F) (E) (R)

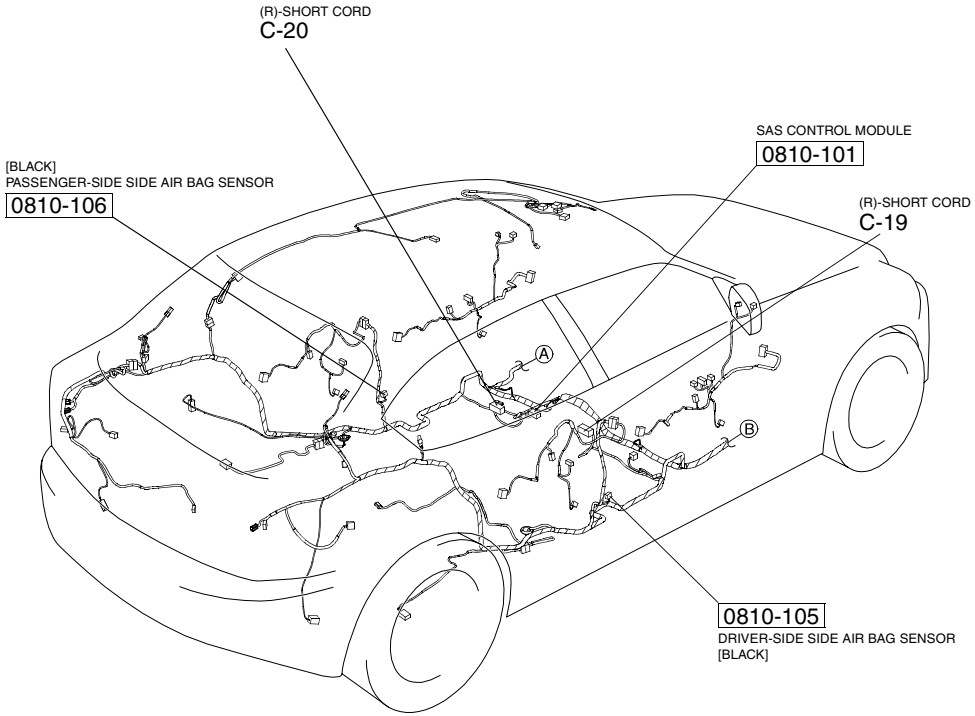

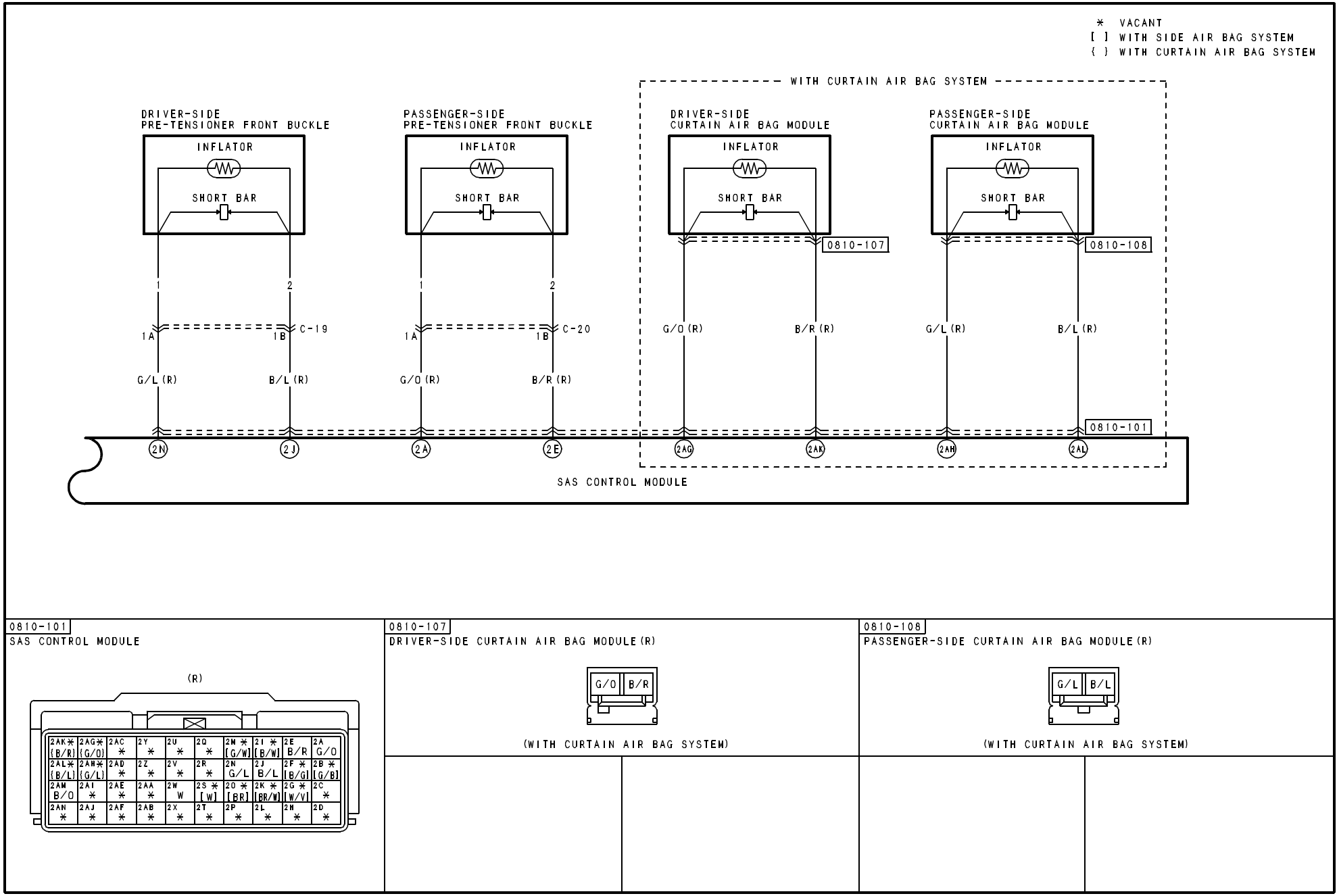
* VACANT
[ ] WITH SIDE AIR BAG SYSTEM
{ } WITH CURTAIN AIR BAG SYSTEM
WITH CURTAIN AIR BAG SYSTEM
DRIVER-SIDE PRE-TENSIONER FRONT BUCKLE
PASSENGER-SIDE PRE-TENSIONER FRONT BUCKLE
DRIVER-SIDE CURTAIN AIR BAG MODULE
PASSENGER-SIDE CURTAIN AIR BAG MODULE
INFLATOR
SHORT BAR
0810-107
0810-108
0810-101
1
2
1A
1B
C-19
C-20
G/L (R)
B/L (R)
G/O (R)
B/R (R)
2N
2J
2A
2E
2AG
2AK
2AH
2AL
SAS CONTROL MODULE
0810-101
SAS CONTROL MODULE
(R)
2AK * {B/R}
2AG * {G/O}
2AC *
2Y *
2U *
2Q *
2M * [G/W]
2I * [B/W]
2E B/R
2A G/O
2AL * {B/L}
2AH * {G/L}
2AD *
2Z *
2V *
2R *
2N G/L
2J B/L
2F * [B/G]
2B * [G/B]
2AM B/O
2AI *
2AE *
2AA *
2W W
2S * [W]
2O * [BR]
2K * [BR/W]
2G * [W/V]
2C *
2AN *
2AJ *
2AF *
2AB *
2X *
2T *
2P *
2L *
2H *
2D *
0810-107
DRIVER-SIDE CURTAIN AIR BAG MODULE(R)
G/O
B/R
(WITH CURTAIN AIR BAG SYSTEM)
0810-108
PASSENGER-SIDE CURTAIN AIR BAG MODULE(R)
G/L
B/L
(WITH CURTAIN AIR BAG SYSTEM)

HARNESS SYMBOL : (F) (E) (R)

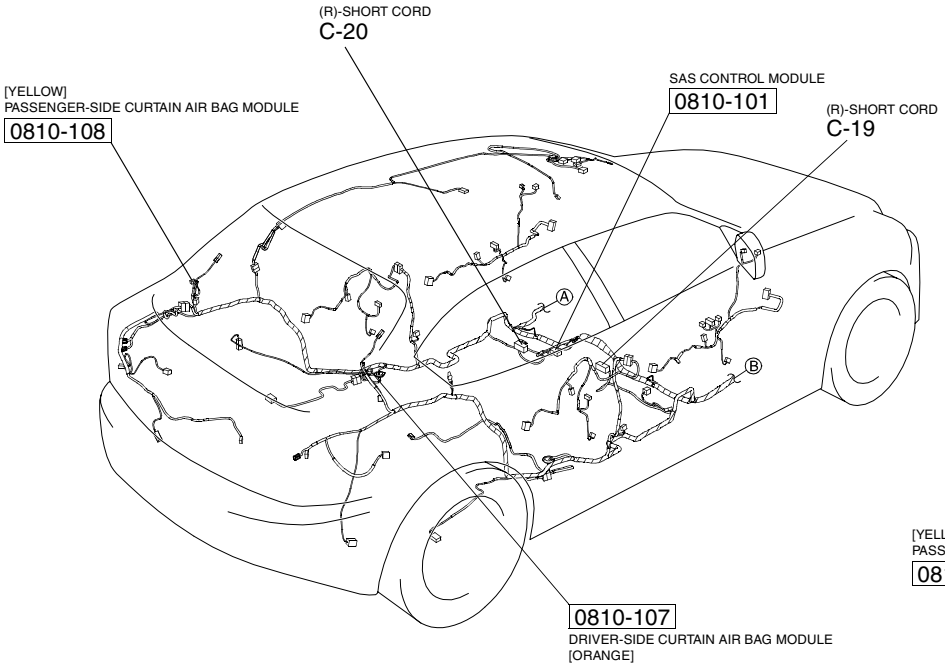

[4SD]

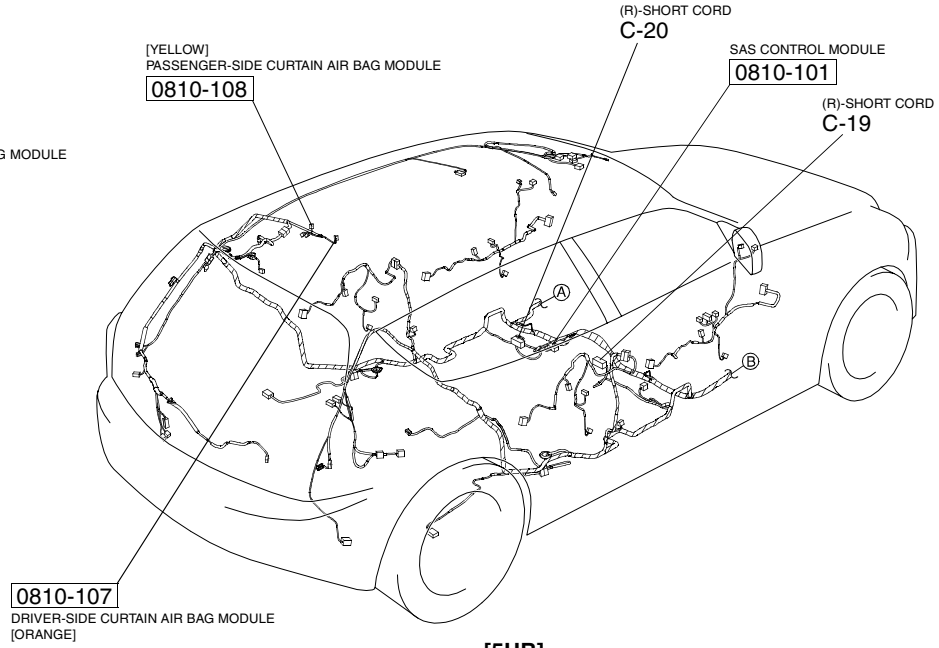

[5HB]

REAR WINDOW DEFROSTER

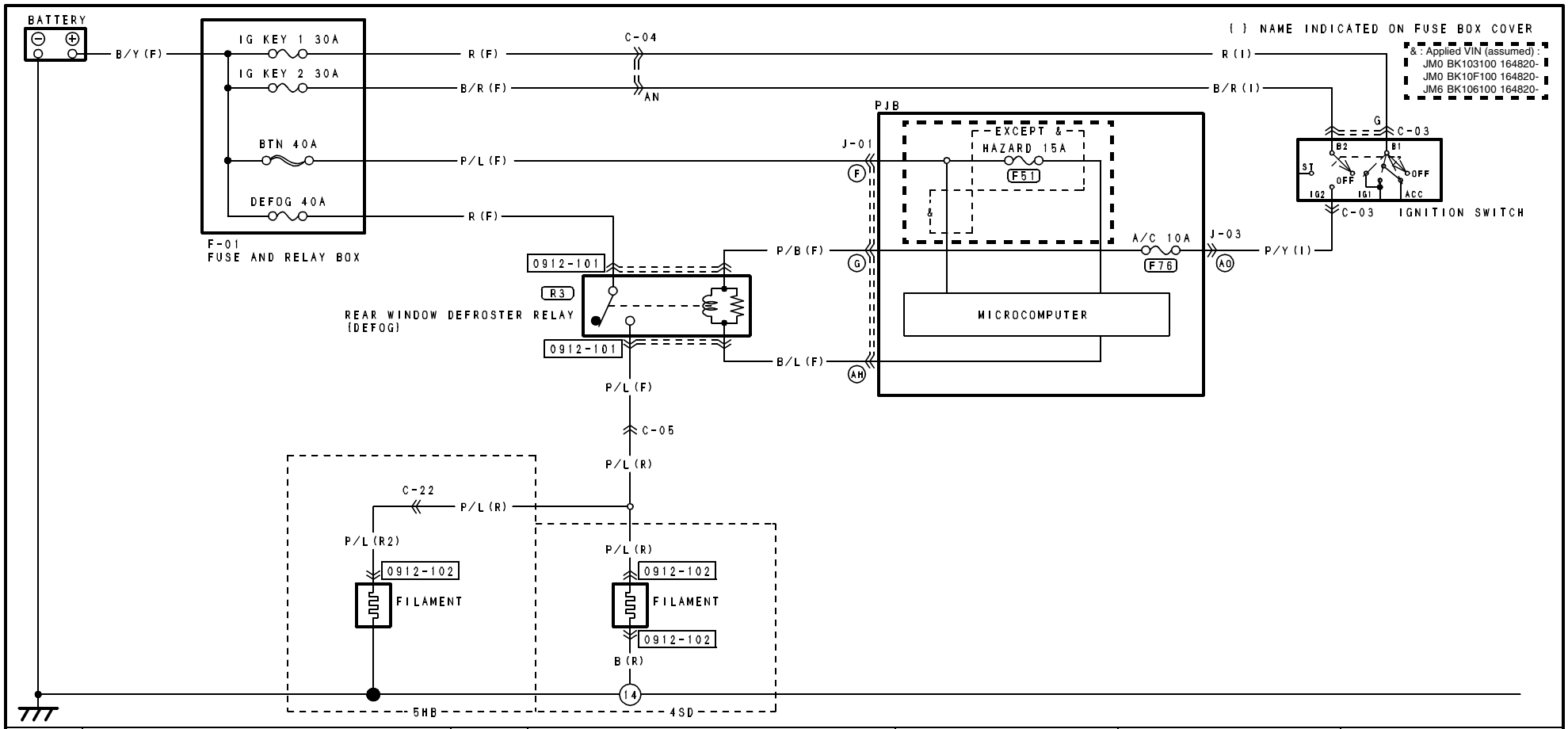

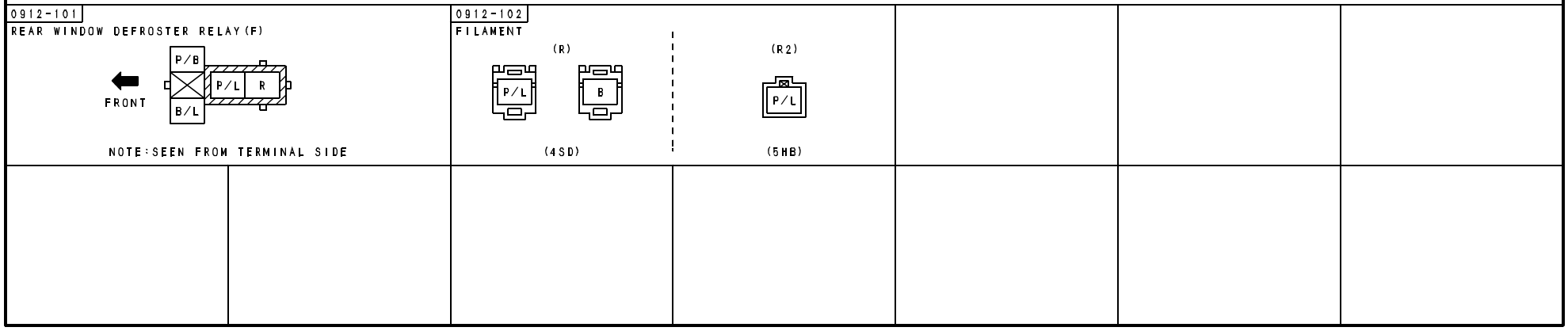

HARNESS SYMBOL : (F) (E) (R)

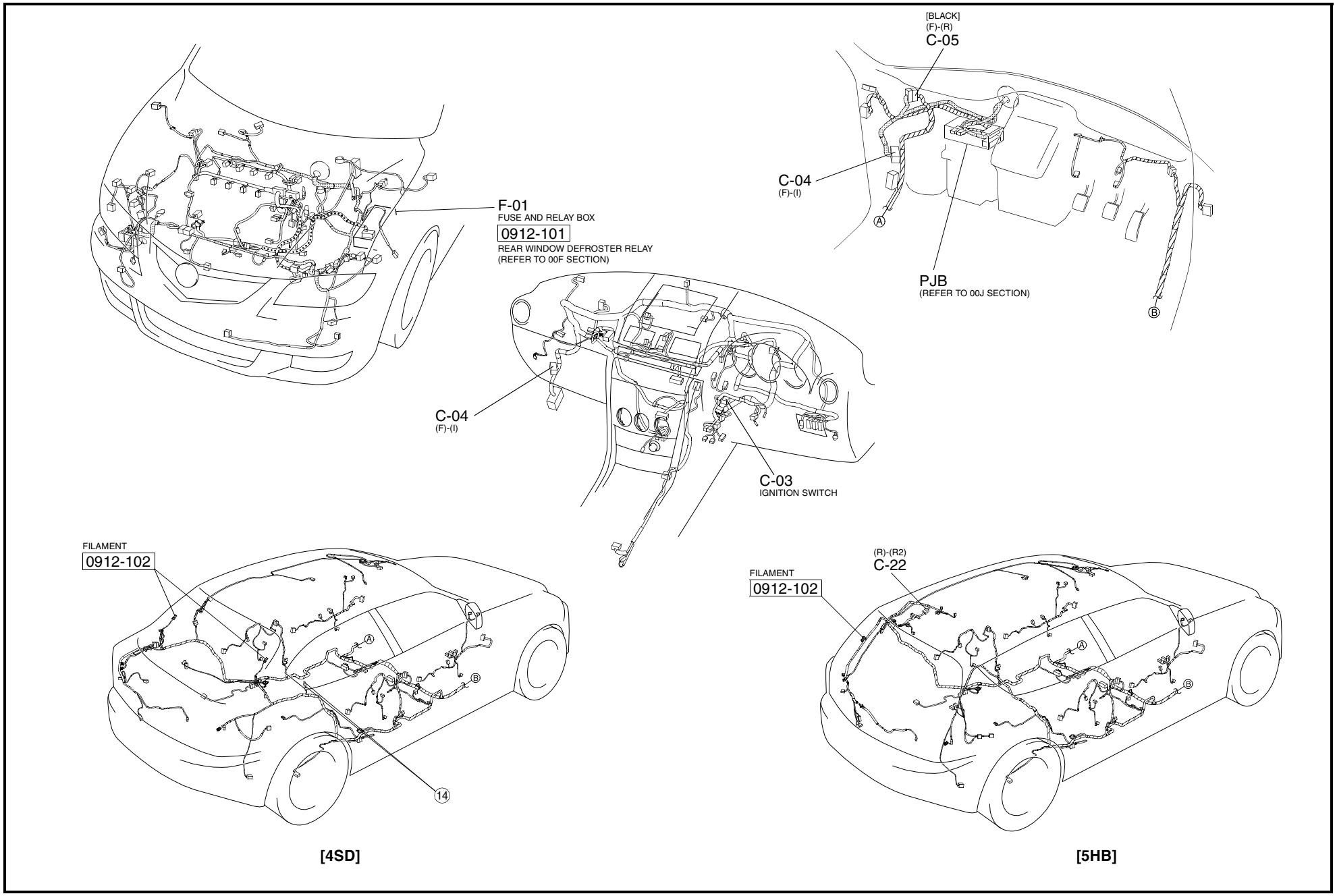

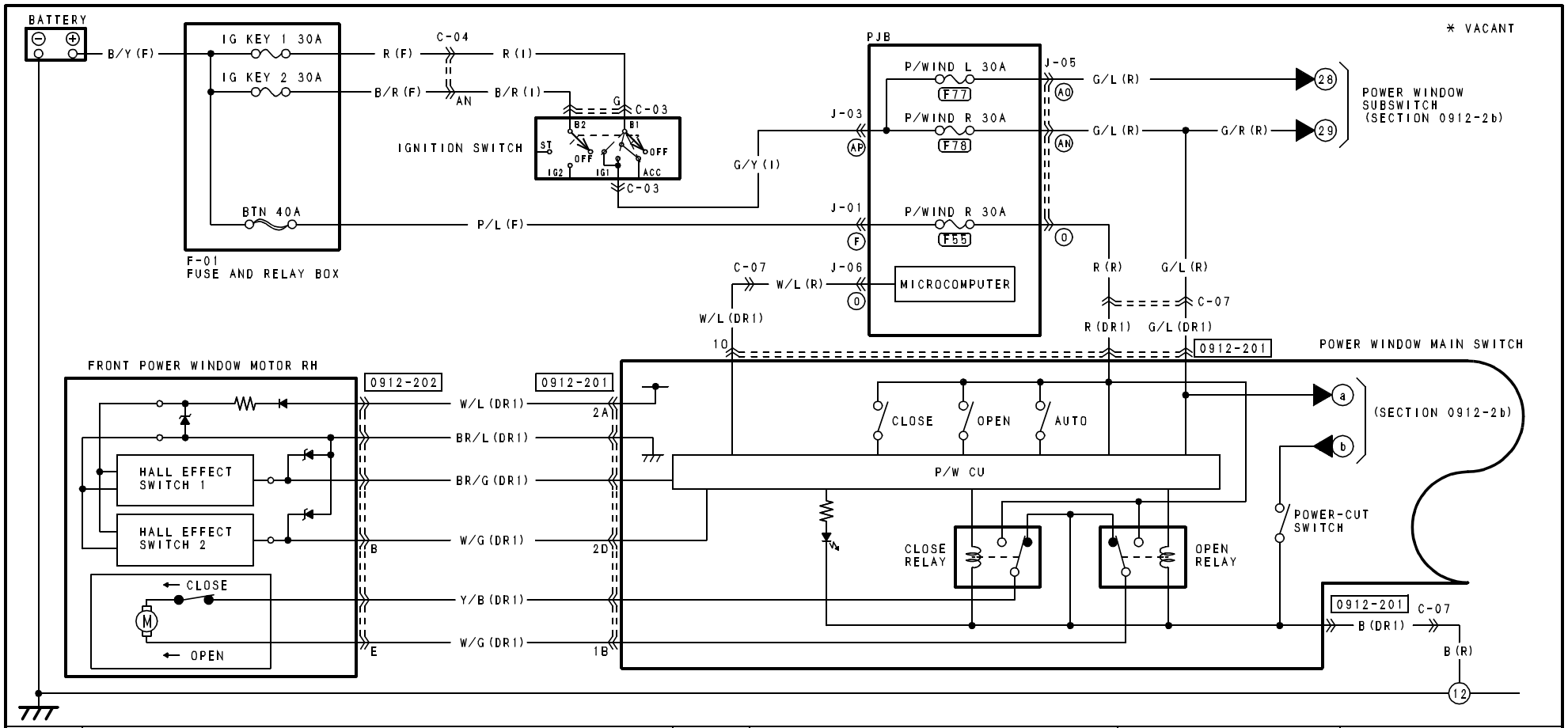

0912-201
POWER WINDOW MAIN SWITCH (DR1)

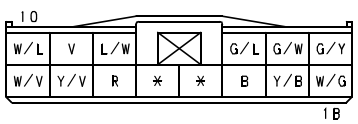

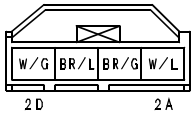

0912-202
FRONT POWER WINDOW MOTOR RH (DR1)

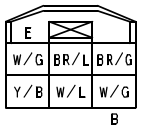

HARNESS SYMBOL : (F) (E) (R)

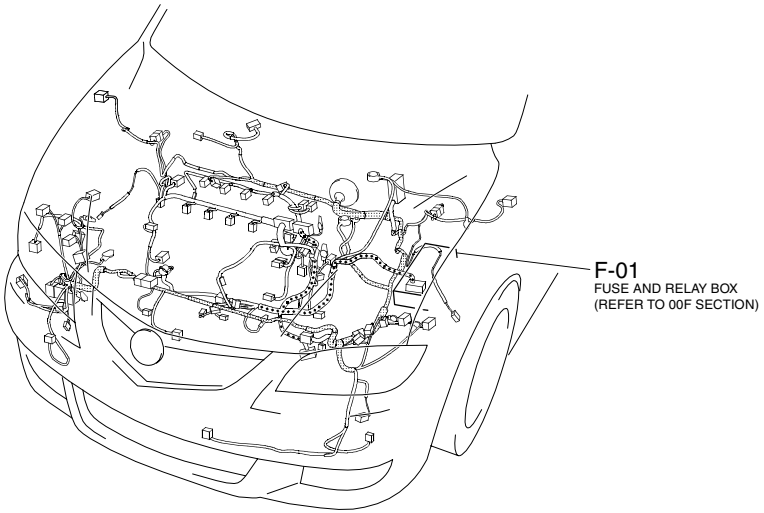

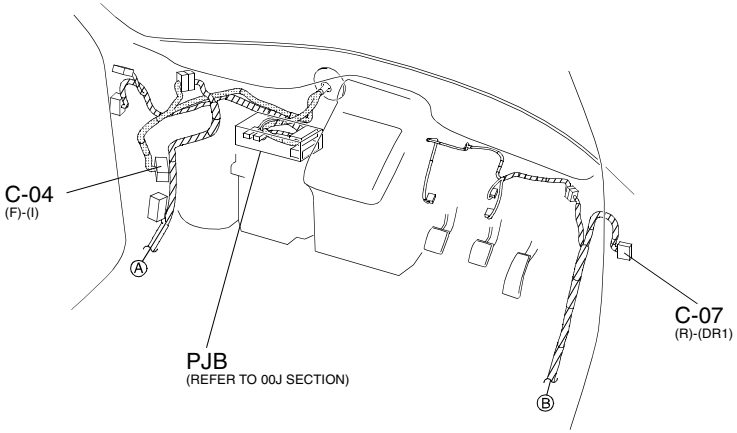

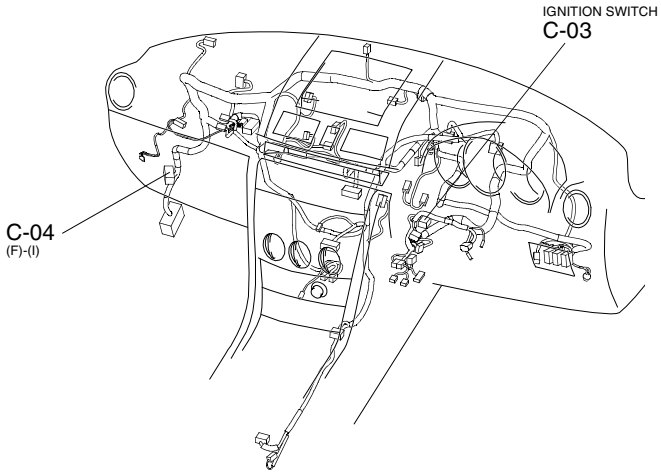

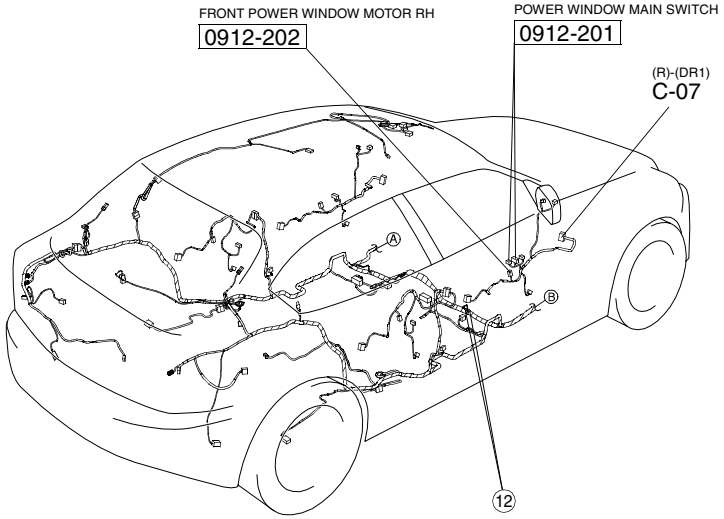

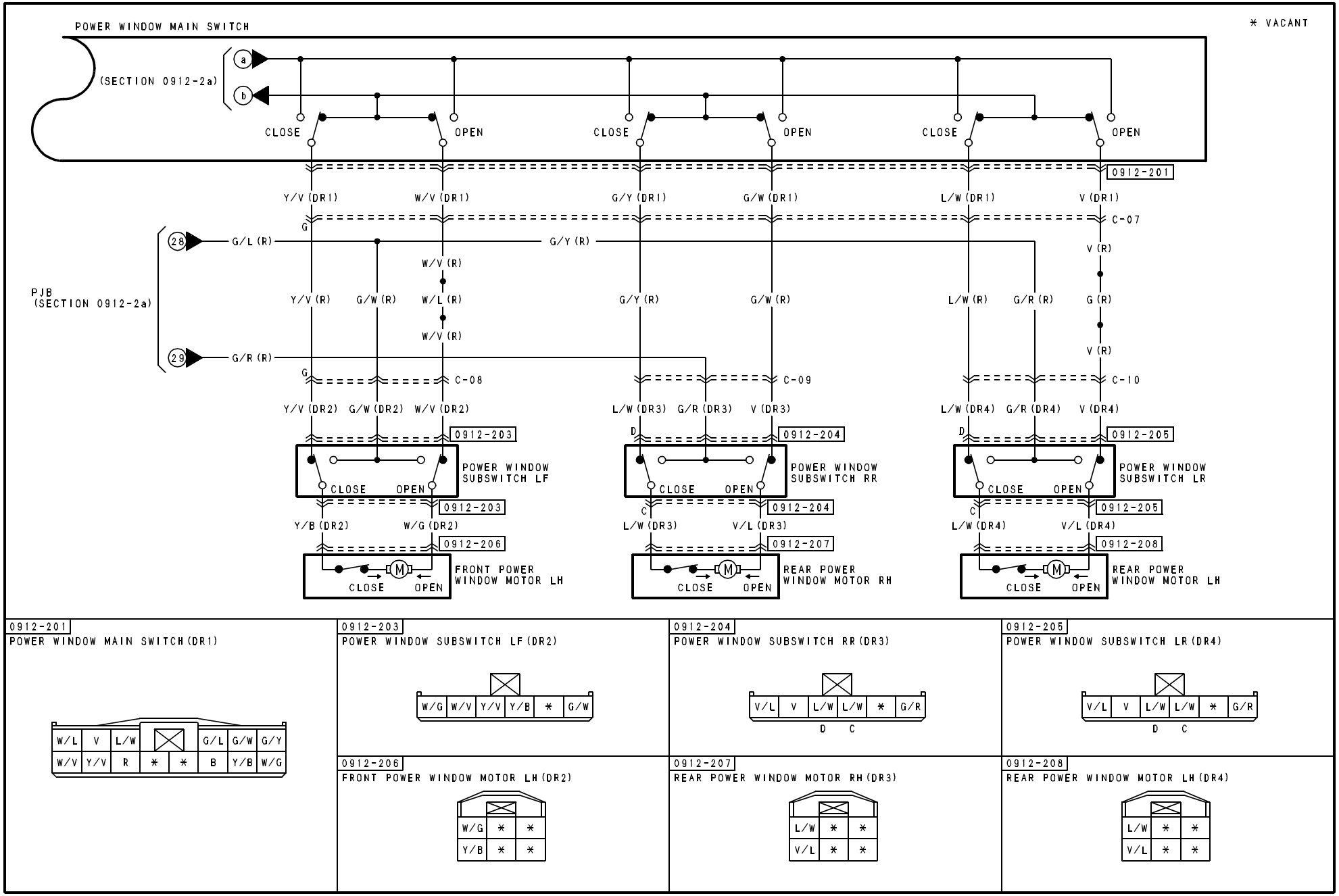
* VACANT
POWER WINDOW MAIN SWITCH
(SECTION 0912-2a)
a
b
CLOSE
OPEN
CLOSE
OPEN
CLOSE
OPEN
0912-201
Y/V (DR1)
W/V (DR1)
G/Y (DR1)
G/W (DR1)
L/W (DR1)
V (DR1)
G
C-07
28
G/L (R)
G/Y (R)
V (R)
W/V (R)
PJB
(SECTION 0912-2a)
Y/V (R)
G/W (R)
W/L (R)
G/Y (R)
G/W (R)
L/W (R)
G/R (R)
G (R)
W/V (R)
V (R)
29
G/R (R)
G
C-08
C-09
C-10
Y/V (DR2)
G/W (DR2)
W/V (DR2)
L/W (DR3)
G/R (DR3)
V (DR3)
L/W (DR4)
G/R (DR4)
V (DR4)
D
0912-203
0912-204
0912-205
POWER WINDOW
SUBSWITCH LF
POWER WINDOW
SUBSWITCH RR
POWER WINDOW
SUBSWITCH LR
CLOSE
OPEN
C
Y/B (DR2)
W/G (DR2)
L/W (DR3)
V/L (DR3)
L/W (DR4)
V/L (DR4)
0912-206
0912-207
0912-208
M
FRONT POWER
WINDOW MOTOR LH
REAR POWER
WINDOW MOTOR RH
REAR POWER
WINDOW MOTOR LH
0912-201
POWER WINDOW MAIN SWITCH (DR1)
W/L V L/W G/L G/W G/Y
W/V Y/V R * * B Y/B W/G
0912-203
POWER WINDOW SUBSWITCH LF (DR2)
W/G W/V Y/V Y/B * G/W
0912-204
POWER WINDOW SUBSWITCH RR (DR3)
V/L V L/W L/W * G/R
D C
0912-205
POWER WINDOW SUBSWITCH LR (DR4)
V/L V L/W L/W * G/R
D C
0912-206
FRONT POWER WINDOW MOTOR LH (DR2)
W/G * *
Y/B * *
0912-207
REAR POWER WINDOW MOTOR RH (DR3)
L/W * *
V/L * *
0912-208
REAR POWER WINDOW MOTOR LH (DR4)
L/W * *
V/L * *

HARNESS SYMBOL : (F) (E) (R)

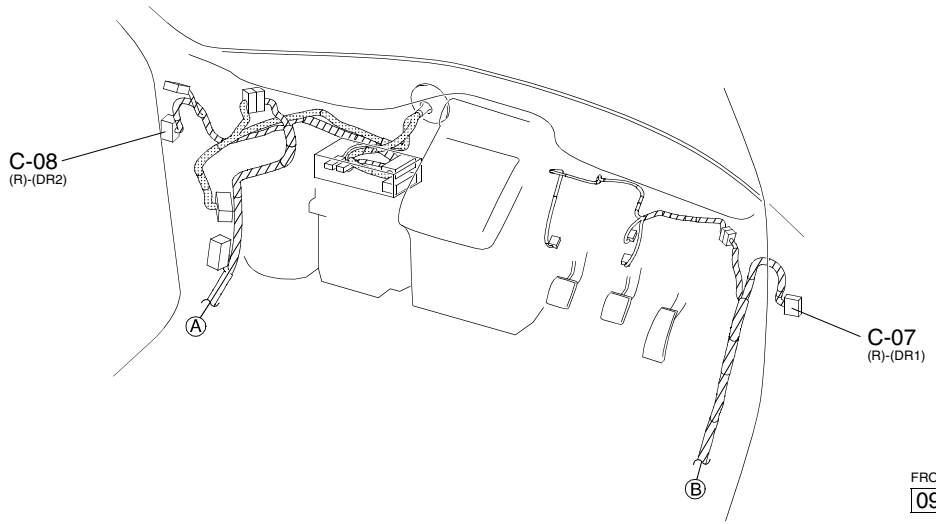

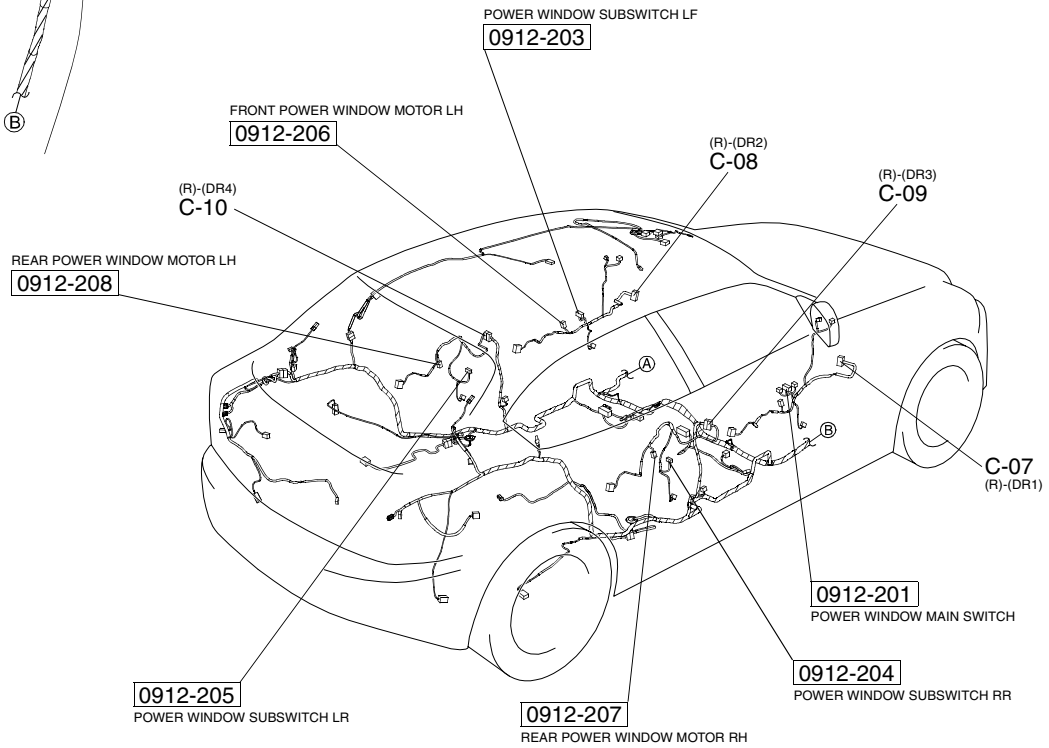

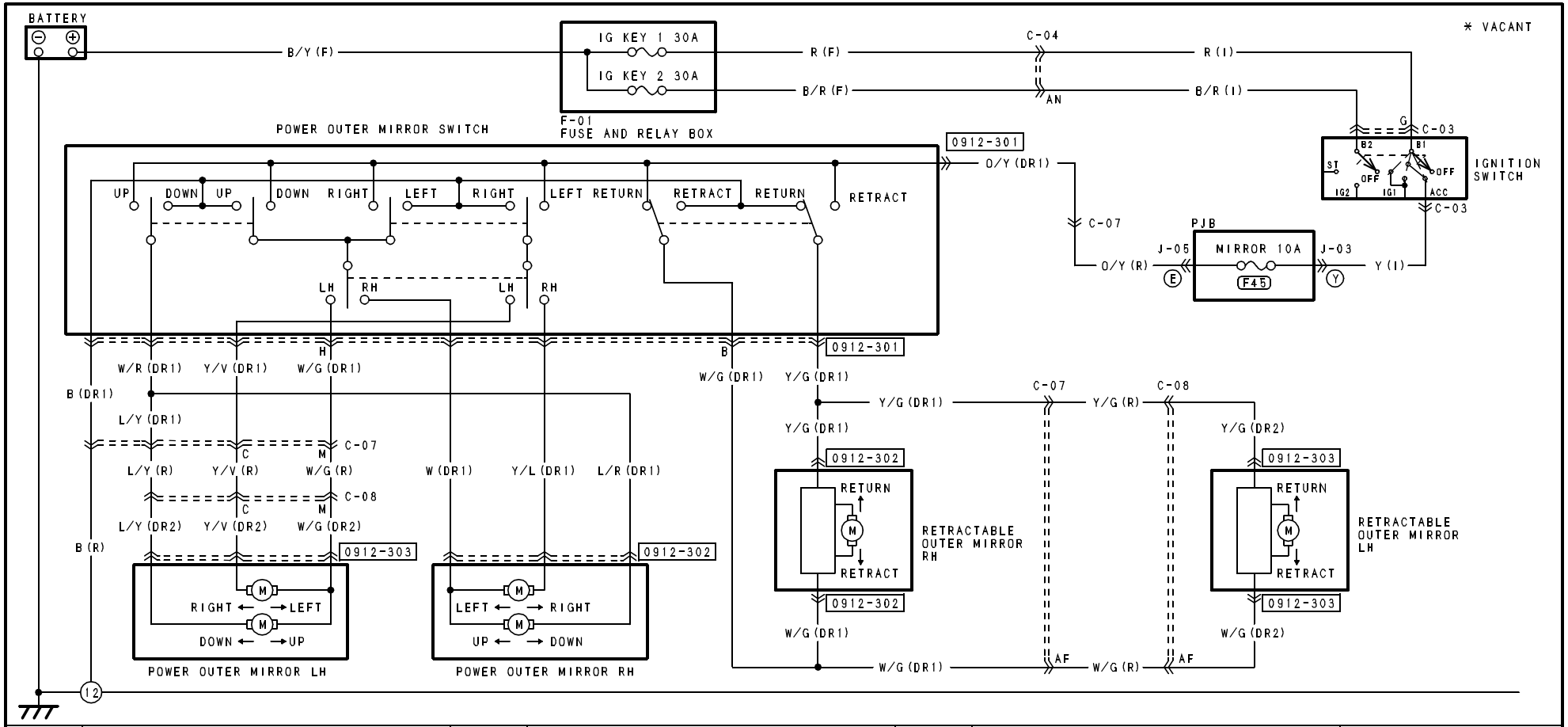

0912-301
POWER OUTER MIRROR SWITCH (DR1)

Y/L	W/R			*	Y/G
Y/V	W	W/G	O/Y	B	W/G
		H		B	

0912-302
POWER OUTER MIRROR RH/
RETRACTABLE OUTER MIRROR RH (DR1)

Y/G	*	*	W/G
*	Y/L	W	L/R

0912-303
POWER OUTER MIRROR LH/
RETRACTABLE OUTER MIRROR LH (DR2)

Y/G	*	*	W/G
*	Y/V	W/G	L/Y

HARNESS SYMBOL : (F) (E) (R)

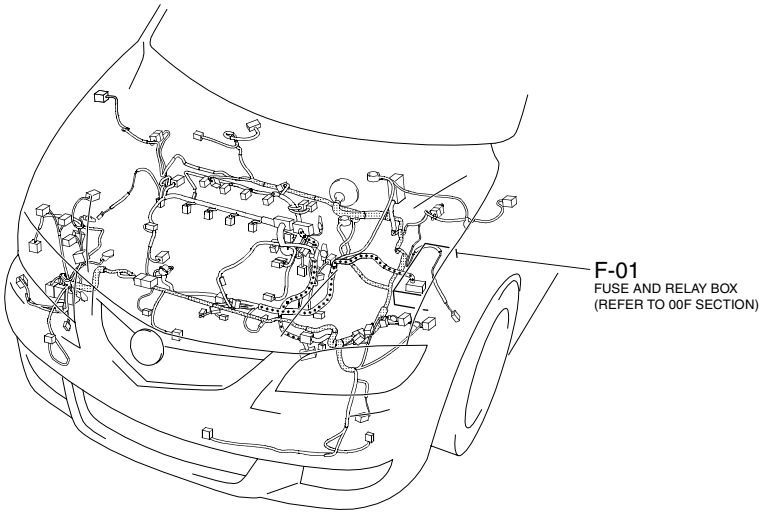

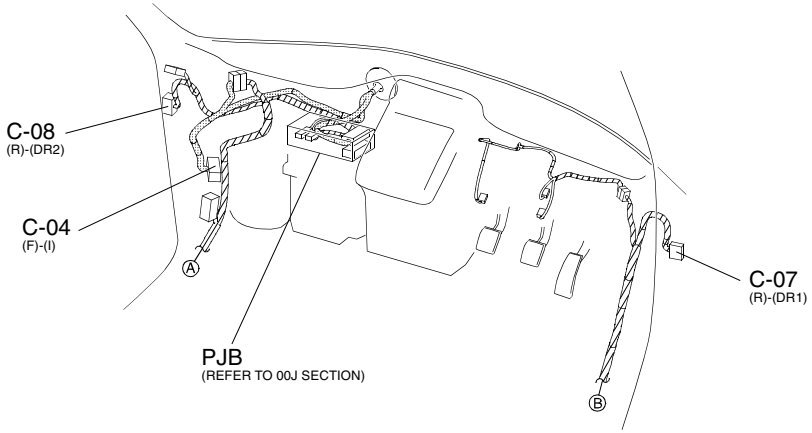

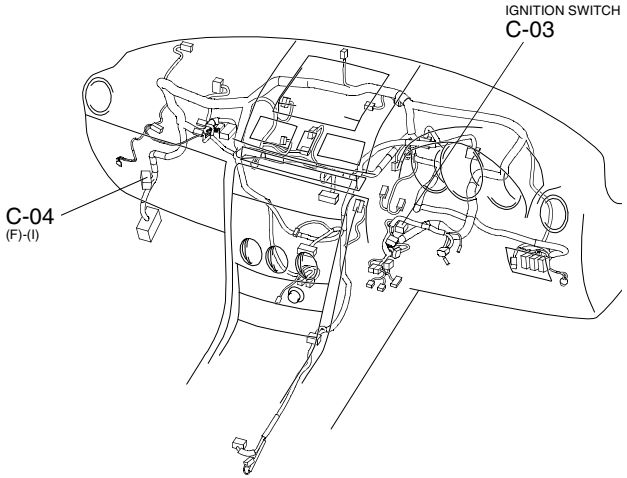

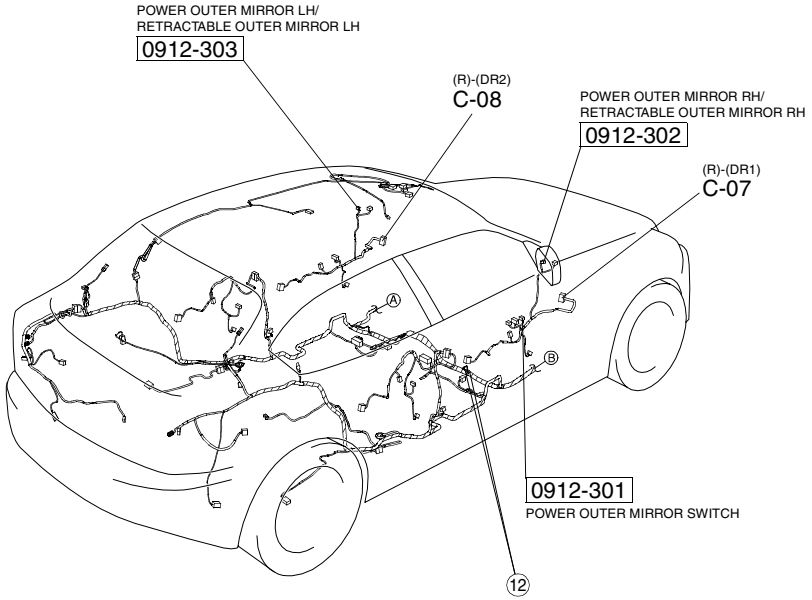

POWER DOOR LOCK SYSTEM (WITHOUT DOUBLE LOCKING SYSTEM)

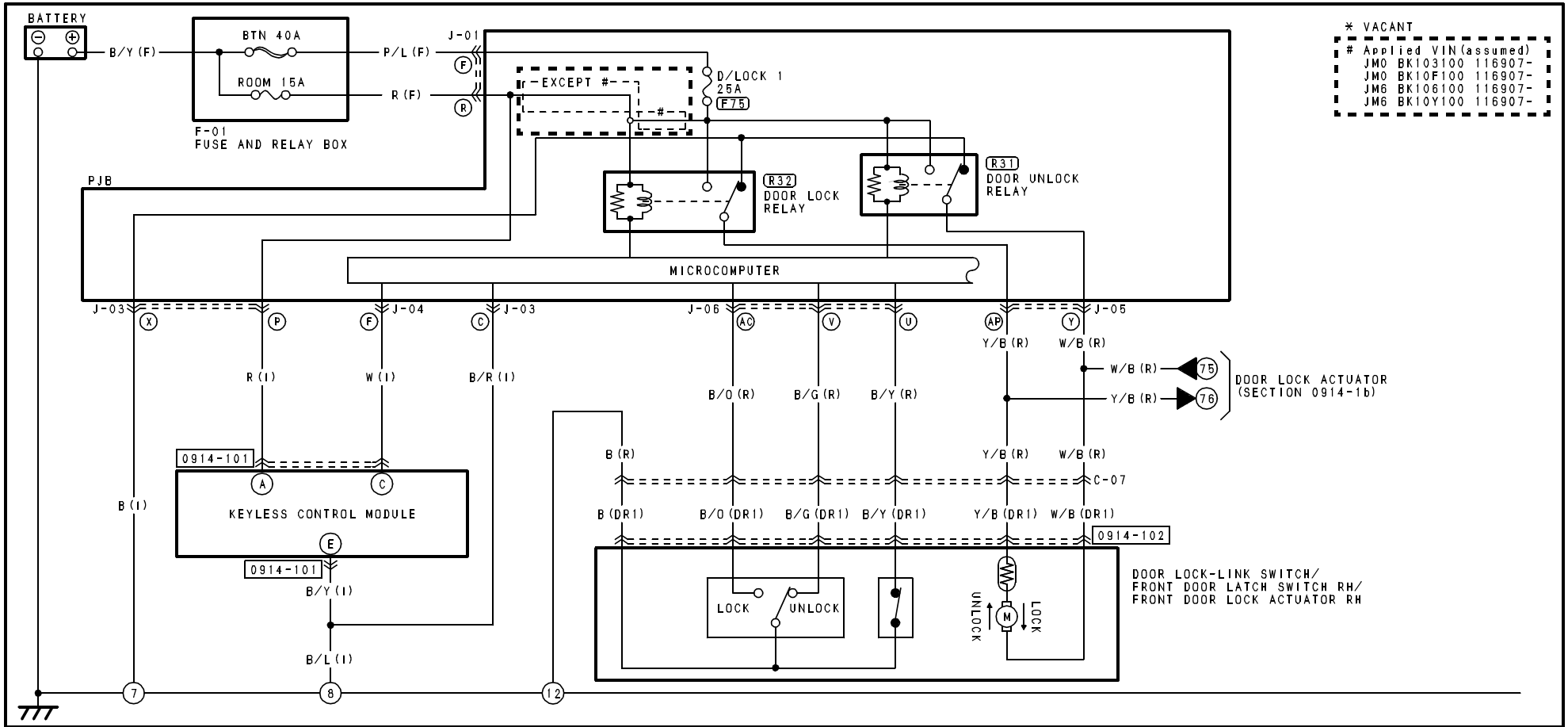

0914-101
KEYLESS CONTROL MODULE (I)

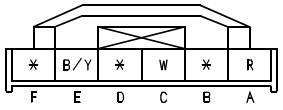

0914-102
DOOR LOCK-LINK SWITCH/
FRONT DOOR LATCH SWITCH RH/
FRONT DOOR LOCK ACTUATOR RH (DR1)

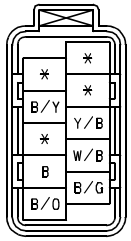

HARNESS SYMBOL : (F) (E) (R)

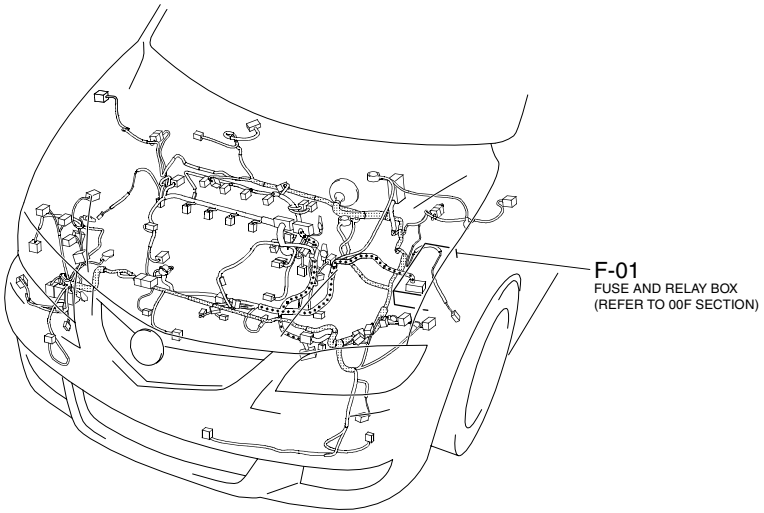

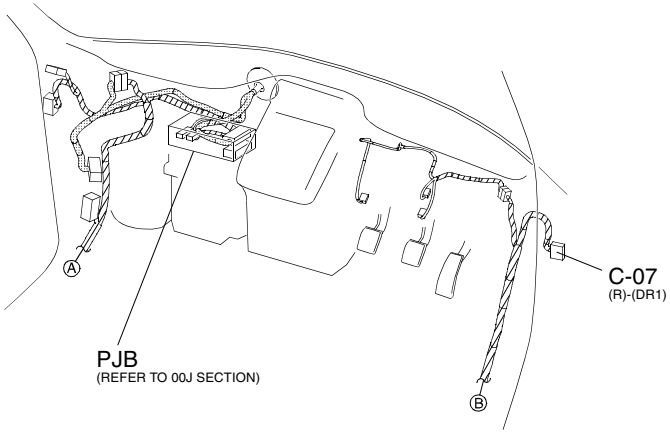

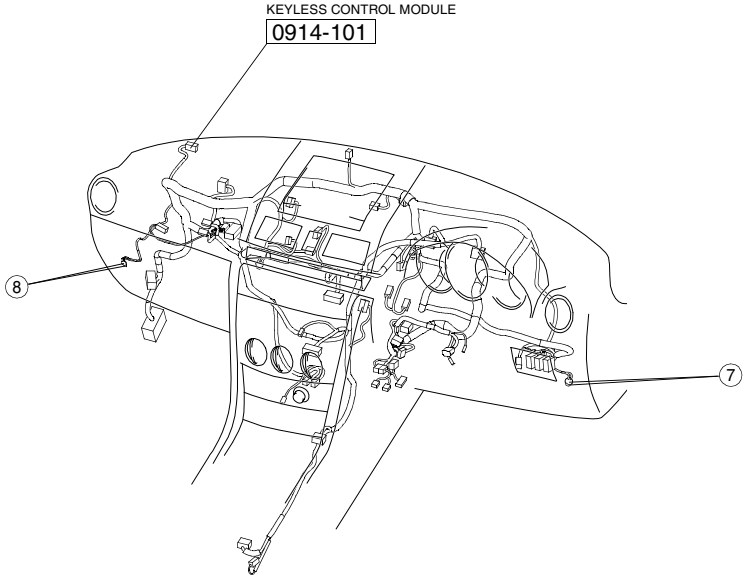

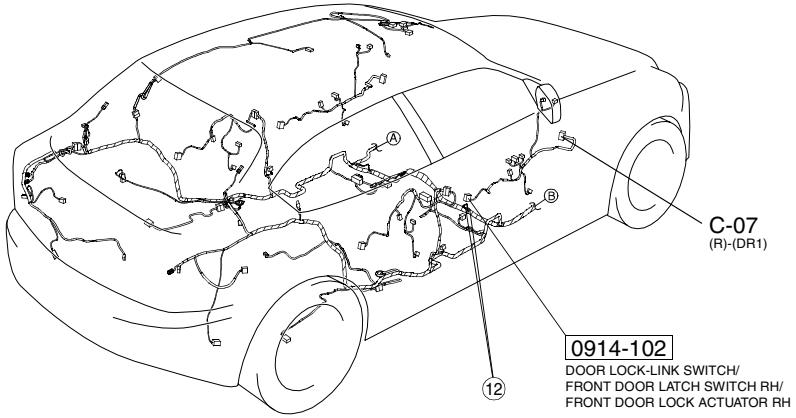

POWER DOOR LOCK SYSTEM (WITHOUT DOUBLE LOCKING SYSTEM)

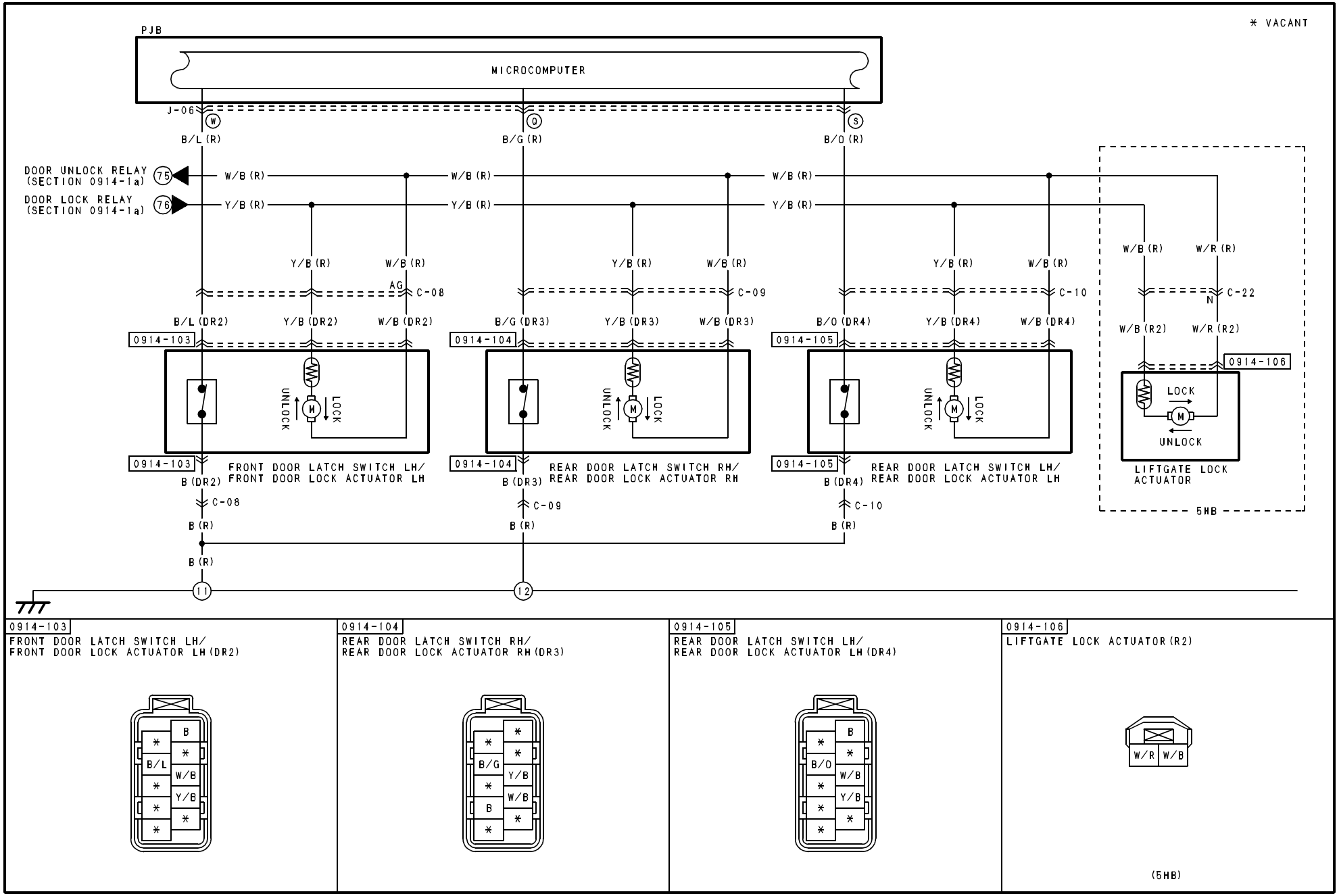

0914-103
FRONT DOOR LATCH SWITCH LH/
FRONT DOOR LOCK ACTUATOR LH (DR2)

0914-104
REAR DOOR LATCH SWITCH RH/
REAR DOOR LOCK ACTUATOR RH (DR3)

0914-105
REAR DOOR LATCH SWITCH LH/
REAR DOOR LOCK ACTUATOR LH (DR4)

0914-106
LIFTGATE LOCK ACTUATOR (R2)

(5HB)

HARNESS SYMBOL : (F) (E) (R)

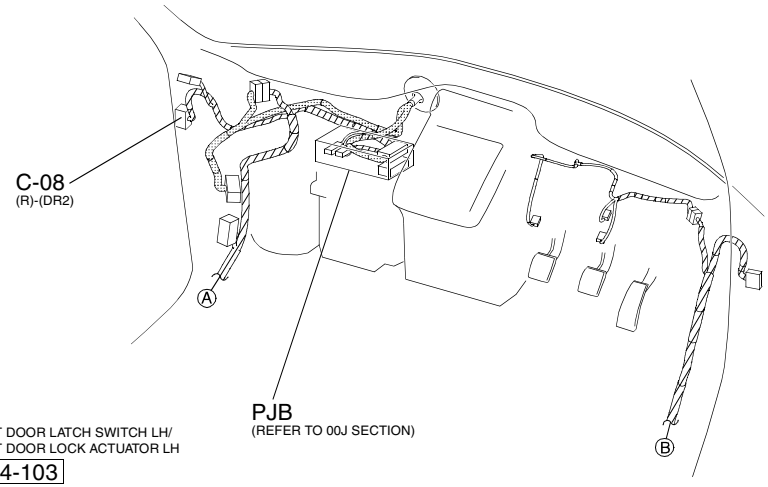

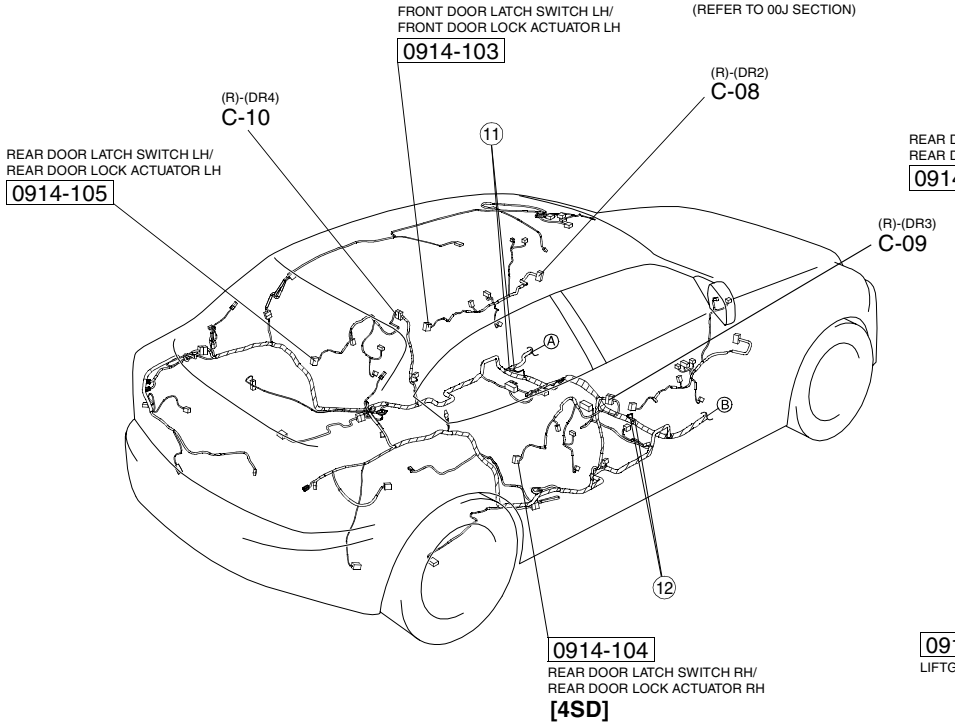

[4SD]

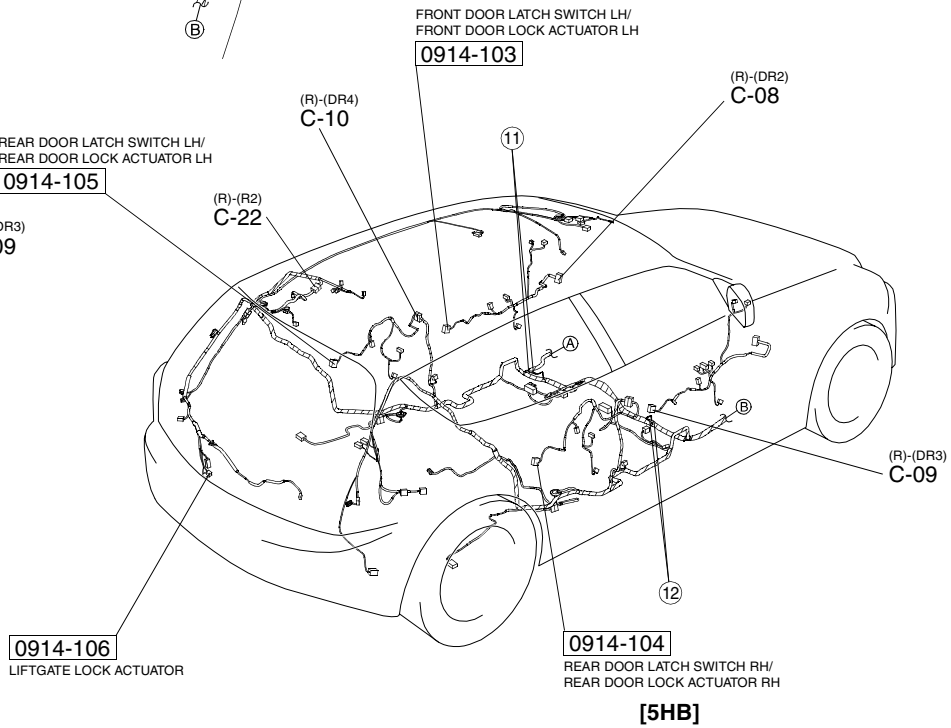

[5HB]

POWER DOOR LOCK SYSTEM (WITH DOUBLE LOCKING SYSTEM)

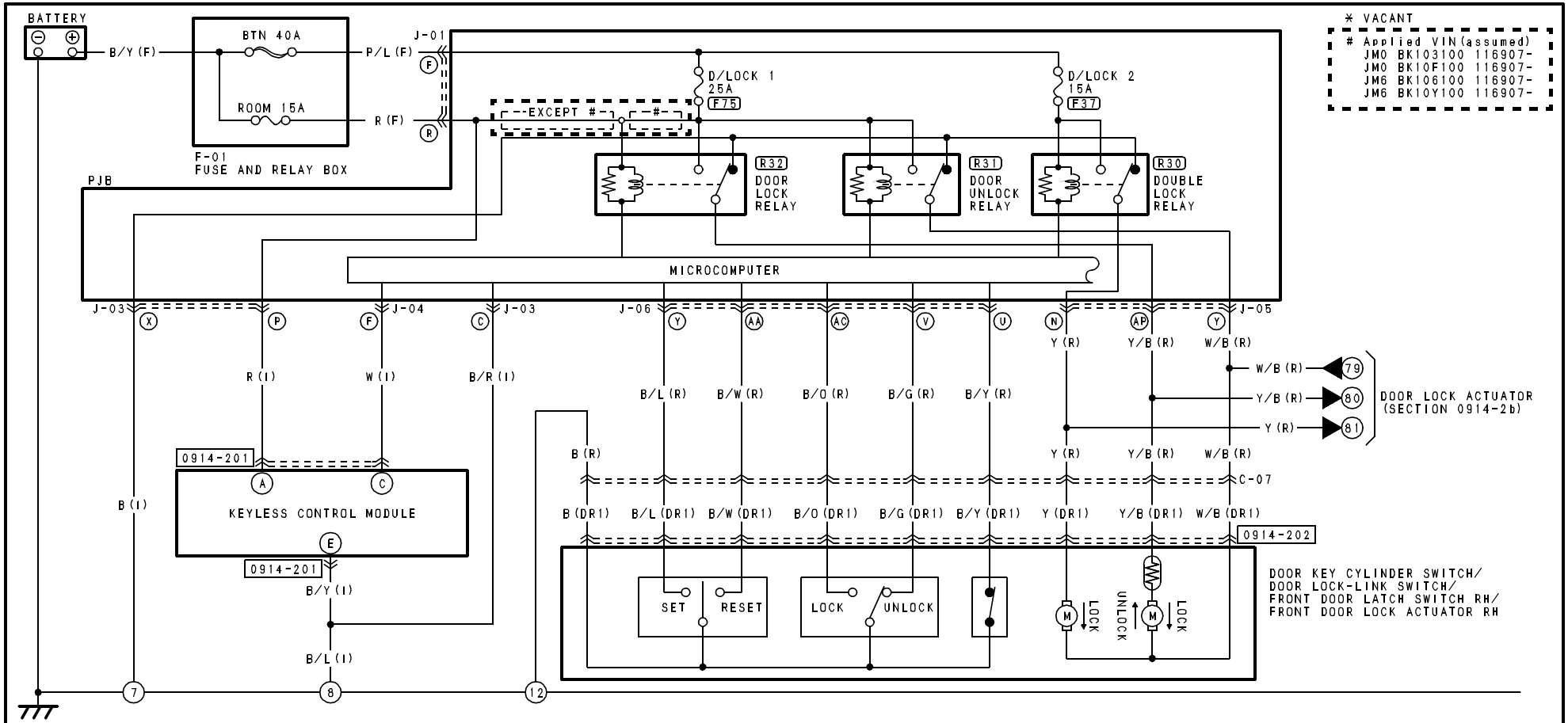

0914-201
KEYLESS CONTROL MODULE (I)

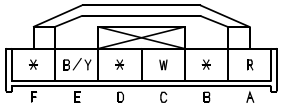

0914-202
DOOR KEY CYLINDER SWITCH/
DOOR LOCK-LINK SWITCH/
FRONT DOOR LATCH SWITCH RH/
FRONT DOOR LOCK ACTUATOR RH (DR1)

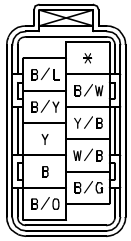

HARNESS SYMBOL : (F) (E) (R)

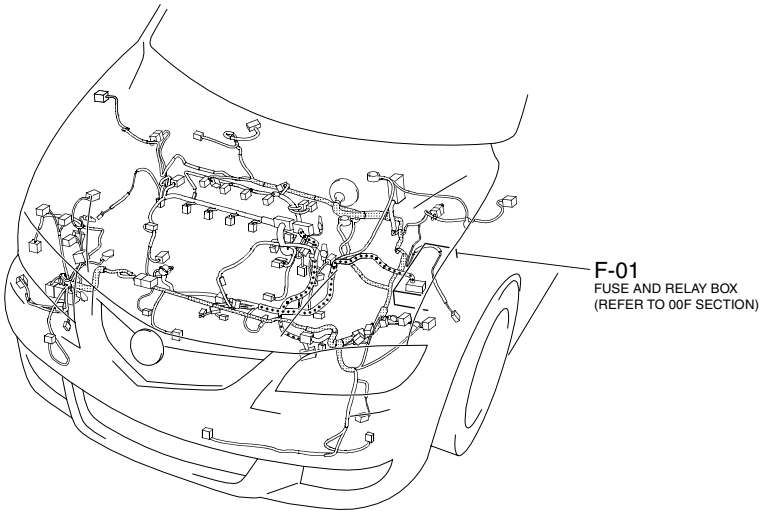

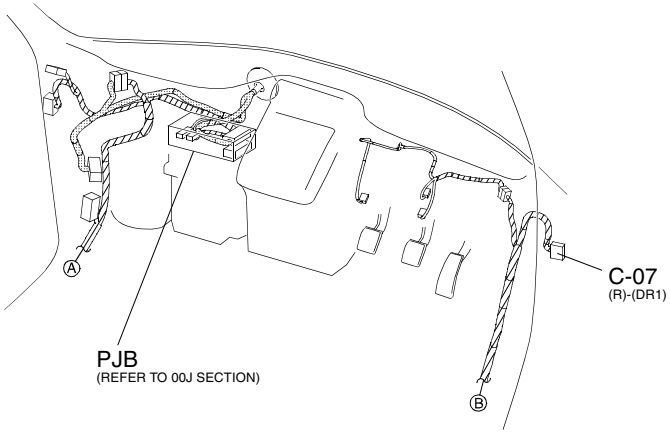

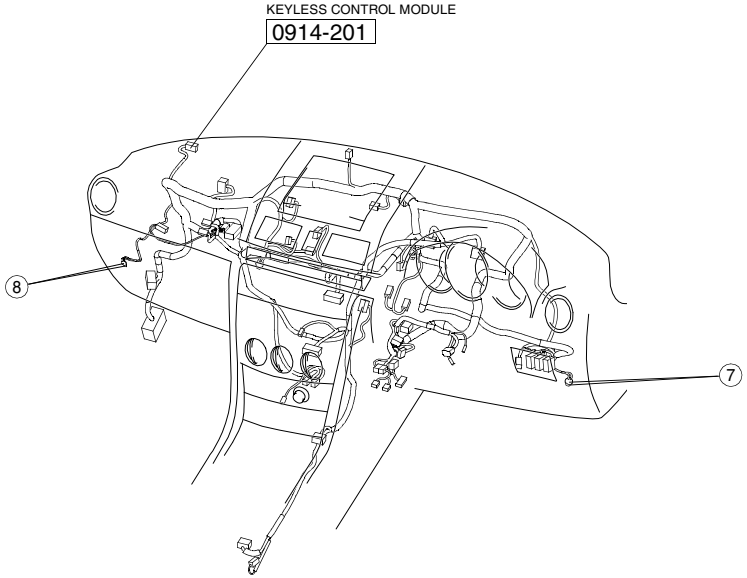

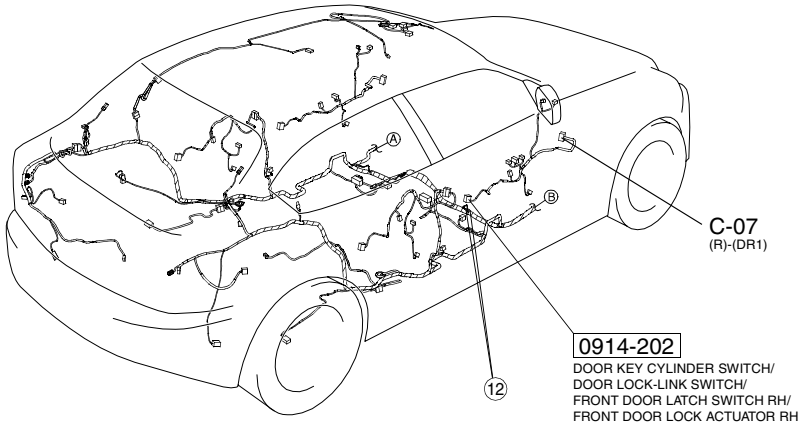

POWER DOOR LOCK SYSTEM (WITH DOUBLE LOCKING SYSTEM)

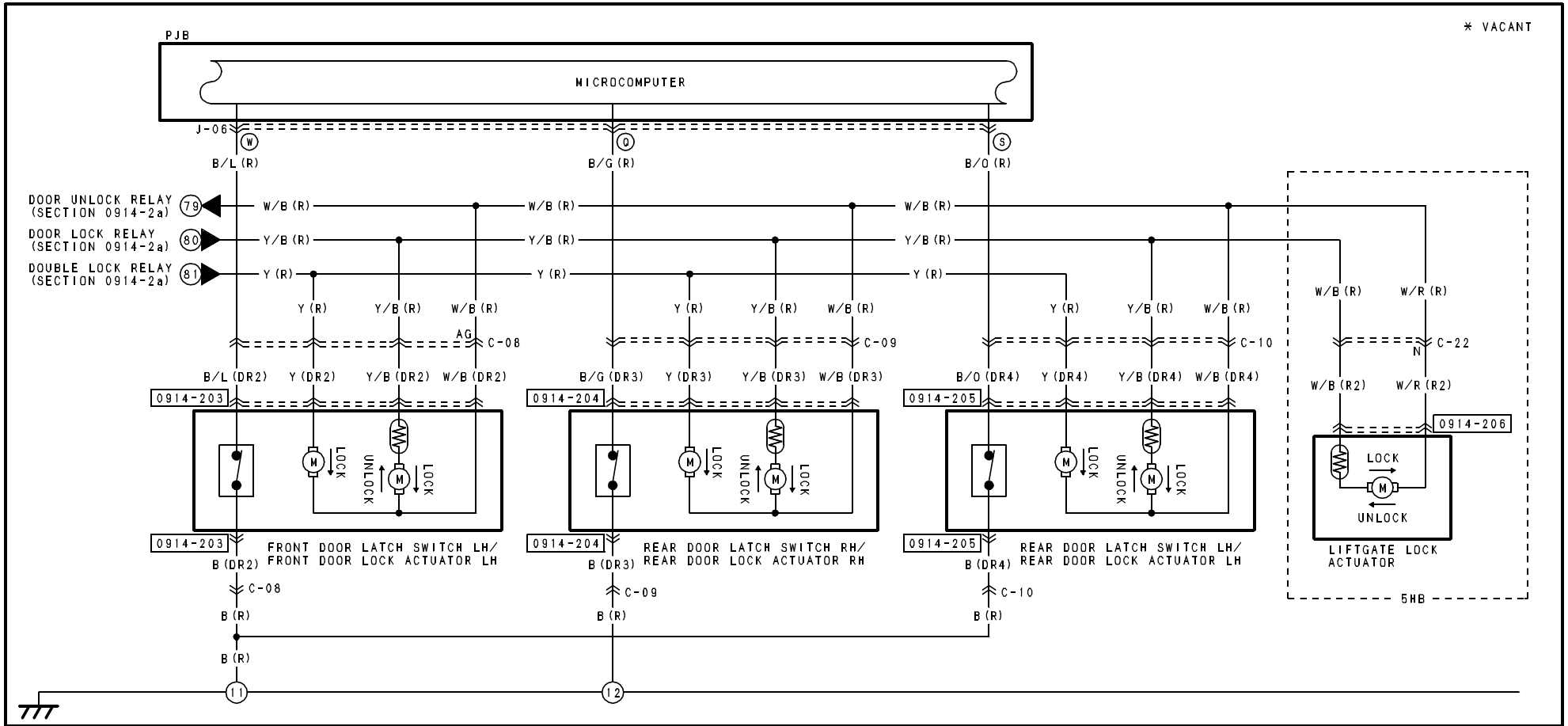

0914-203
FRONT DOOR LATCH SWITCH LH/
FRONT DOOR LOCK ACTUATOR LH (DR2)

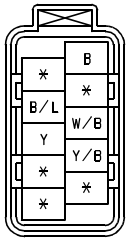

0914-204
REAR DOOR LATCH SWITCH RH/
REAR DOOR LOCK ACTUATOR RH (DR3)

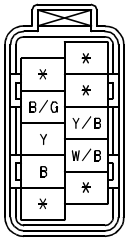

0914-205
REAR DOOR LATCH SWITCH LH/
REAR DOOR LOCK ACTUATOR LH (DR4)

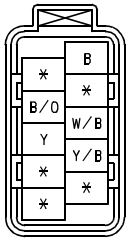

0914-206
LIFTGATE LOCK ACTUATOR (R2)

(5HB)

HARNESS SYMBOL : (F) (E) (R)

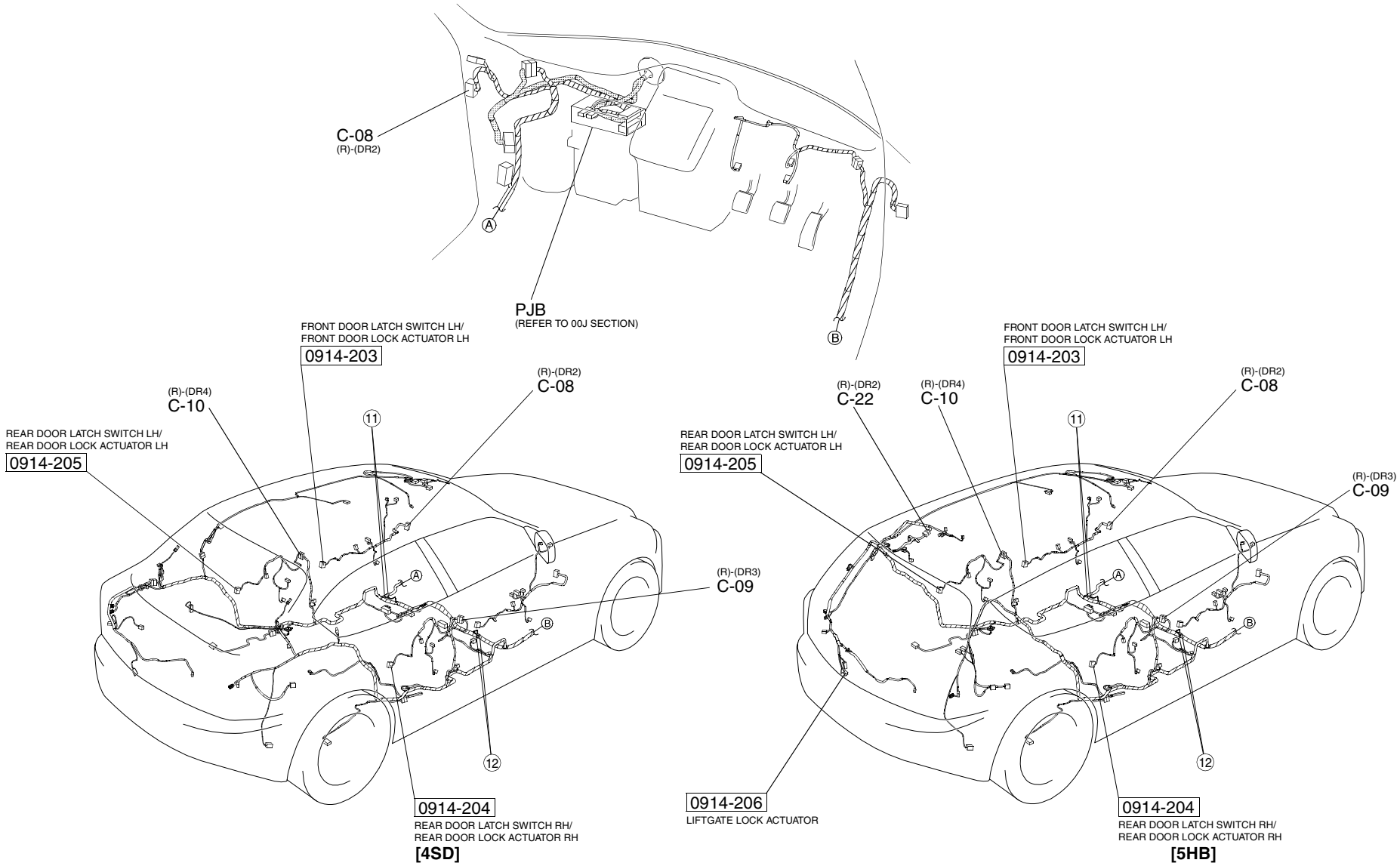

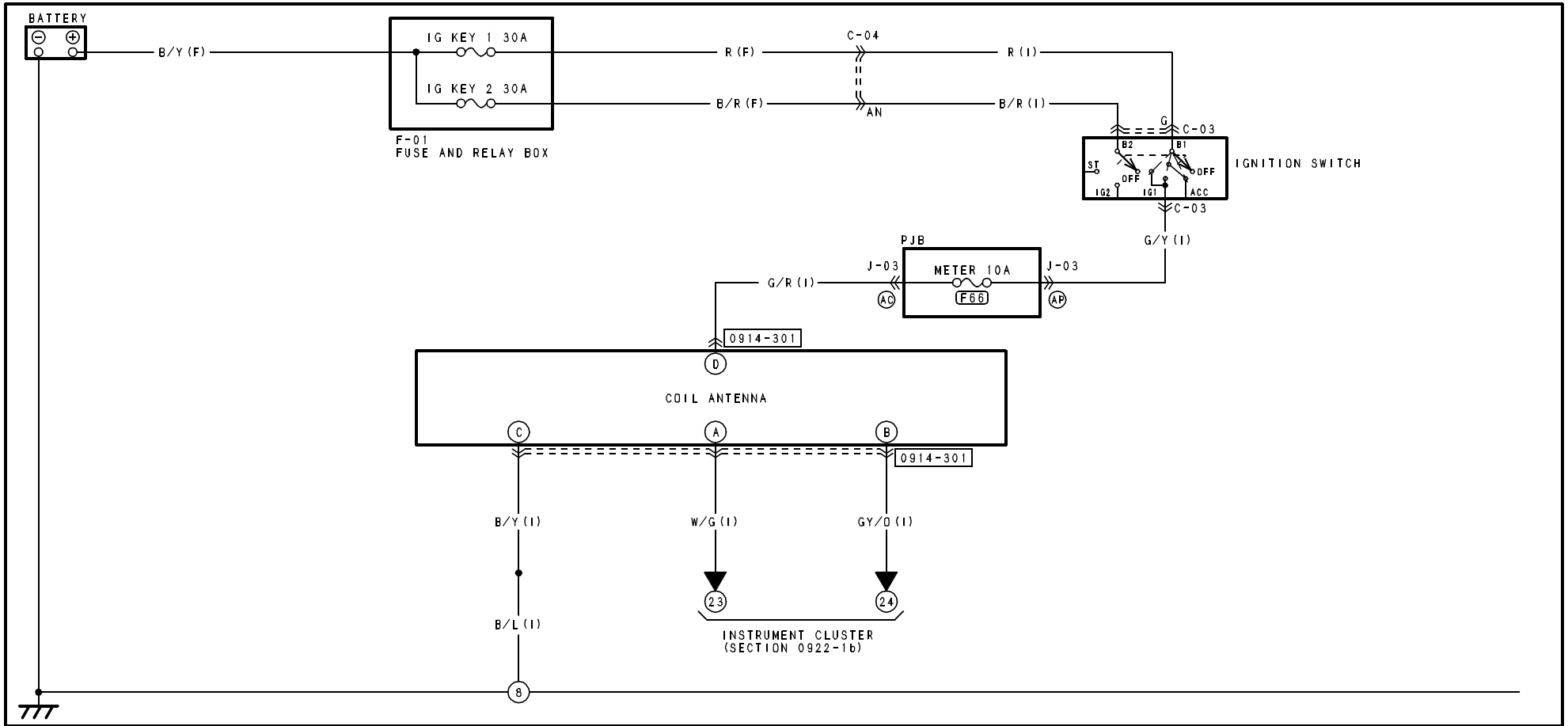

0914-301
COIL ANTENNA (I)

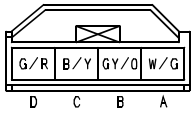

HARNESS SYMBOL : (F) (E) (R)

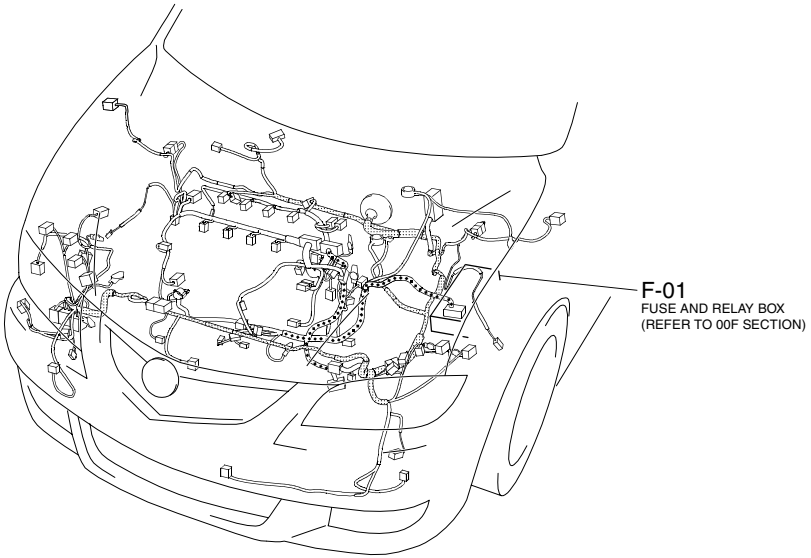

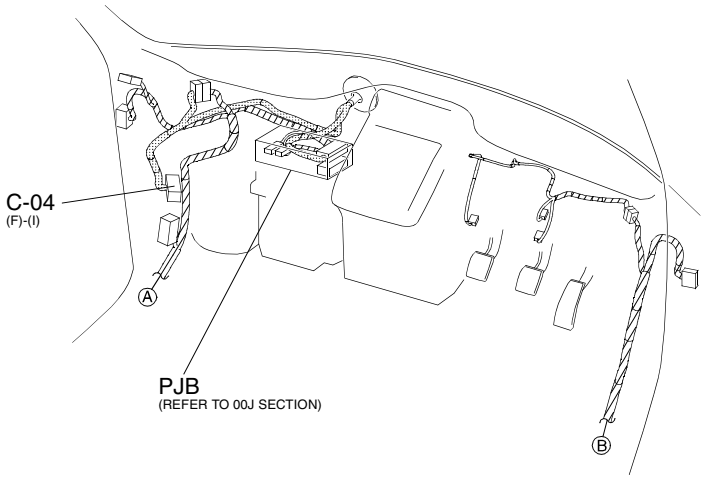

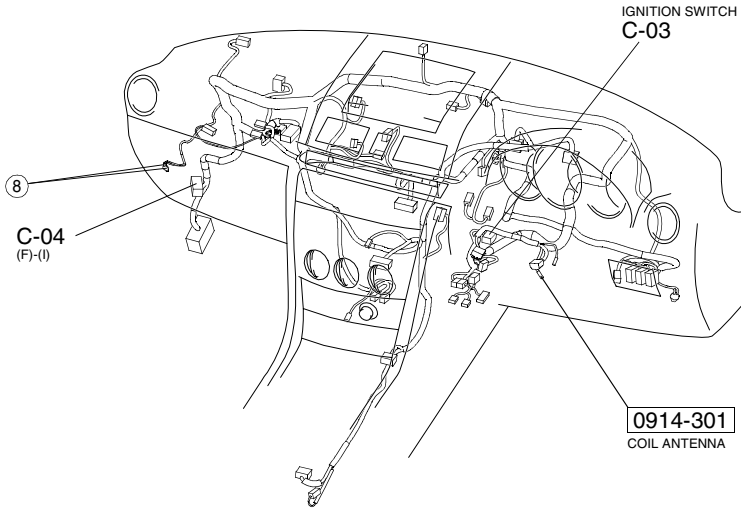

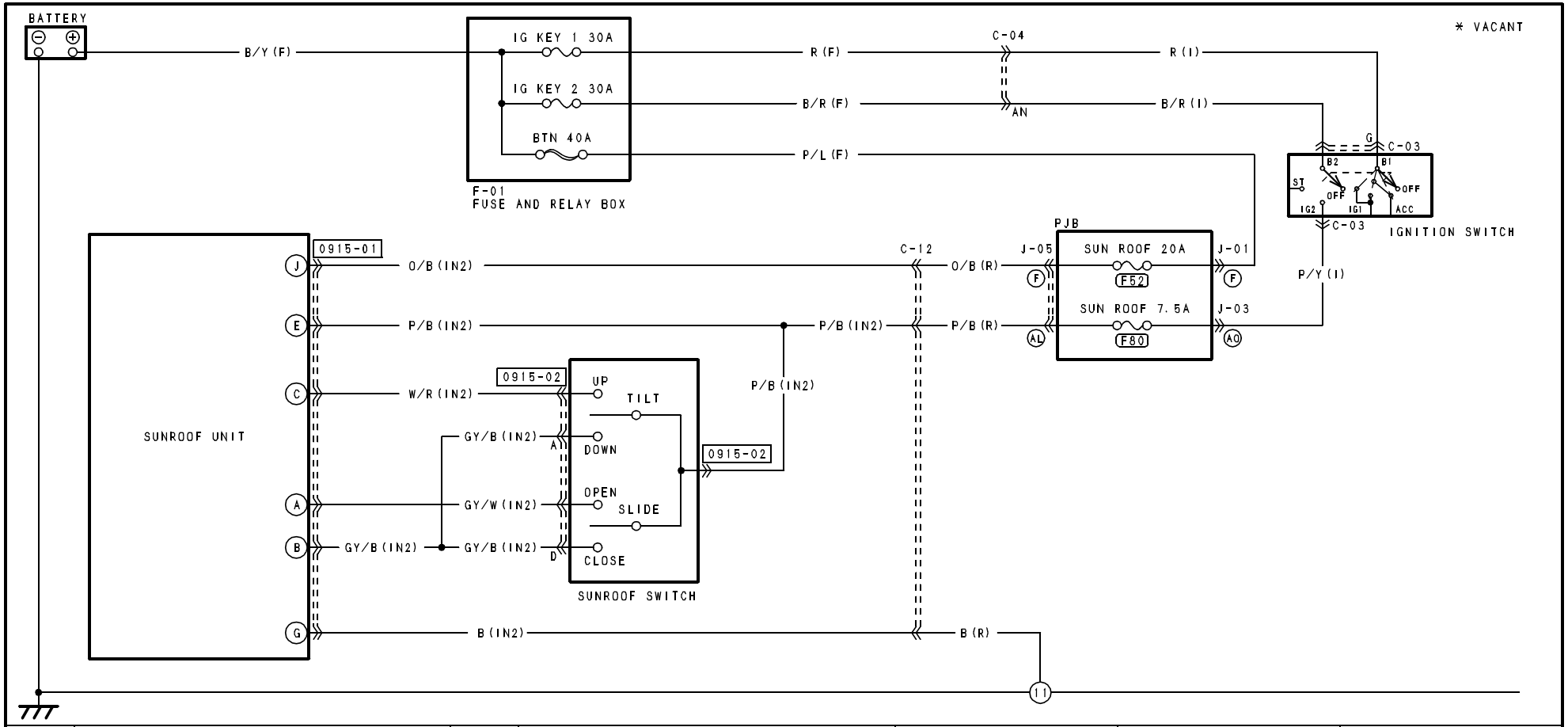

0915-01
SUNROOF UNIT (IN2)

J	H	F	D	B
*	B	P/B	W/R	GY/W
O/B	*	*	*	GY/B

0915-02
SUNROOF SWITCH (IN2)

D			A
P/B			GY/B
W/R	GY/W	GY/B	*

HARNESS SYMBOL : (F) (E) (R)

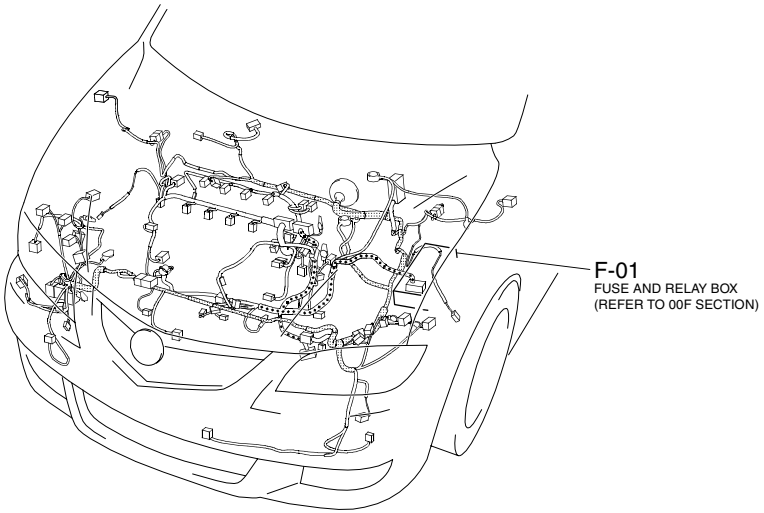

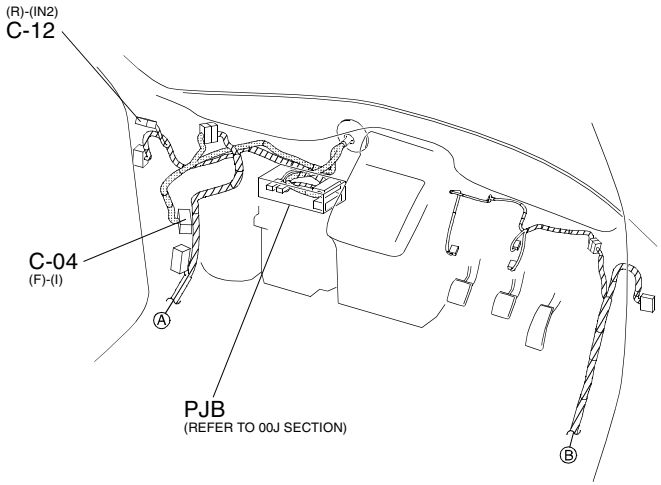

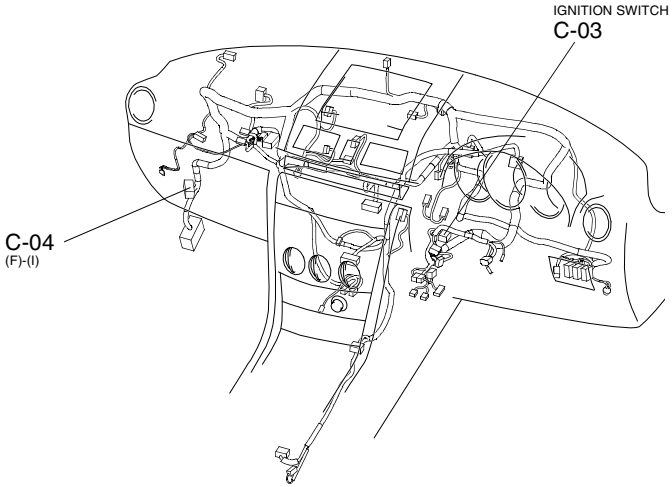

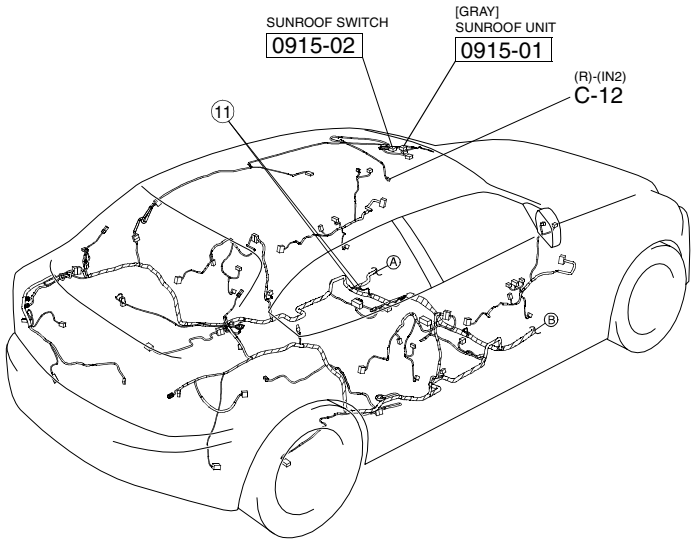

HEADLIGHT

& : Applied VIN (assumed) :
JM0 BK103100 164820-
JM0 BK10F100 164820-
JM6 BK106100 164820-

< > LIGHT SWITCH RIGHT SIDE
[ ] WITH AUTO LIGHT SYSTEM * VACANT

BATTERY
B/Y (F)
IG KEY 1 30A
IG KEY 2 30A
HEAD 40A
BTN 40A
F-01
FUSE AND RELAY BOX
R (F)
B/R (F)
P/L (F)
C-04
AN
R (I)
B/R (I)
C-03
IGNITION SWITCH
ST
OFF
IG2
IG1
ACC
B2
B1
G/Y (I)
PJB
J-01
J-03
J-04
R27
HEADLIGHT HIGH RELAY
R23
HEADLIGHT LOW RELAY
R28
TNS RELAY
CPU PWR 10A
F50
HAZARD 15A
F51
EXCEPT &
MICROCOMPUTER
HEAD HIGH L 10A
F39
HEAD HIGH R 10A
F40
HEAD LOW L 15A
F61
HEAD LOW R 15A
F60
ILLUMI 7.5A
F82
WITH AUTO LIGHT SYSTEM
TAILLIGHT (SECTION 0918-2)
B/G (I)
B/O (I)
B/P (I)
B/G (I)
B/W (I)
E <G>
B <L>
0918-101
B/Y (I)
B/L (I)
FLASH-TO PASS
HI
LO
HEADLIGHT
AUTO
TNS
OFF
LIGHT SWITCH
O/B (F)
O/G (F)
L/O (F)
O/W (F)
O/W (F)
HEADLIGHT (SECTION 0918-1b)
R/O (F)
FRONT FOG LIGHT RELAY (SECTION 0918-3)
O/L (I)
ILLUMINATION LIGHT (SECTION 0918-9a)
R (I)
HEADLIGHT LEVELING SWITCH (SECTION 0918-10)
R (F)
HEADLIGHT LEVELING ACTUATOR (SECTION 0918-10)
WITH HEADLIGHT MANUAL LEVELING SYSTEM

0918-101
LIGHT SWITCH (I)

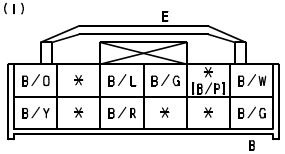

(LIGHT SWITCH LEFT SIDE)

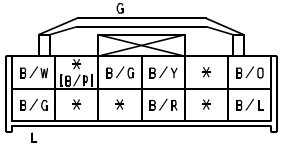

(LIGHT SWITCH RIGHT SIDE)

HARNESS SYMBOL : (F) (E) (R)

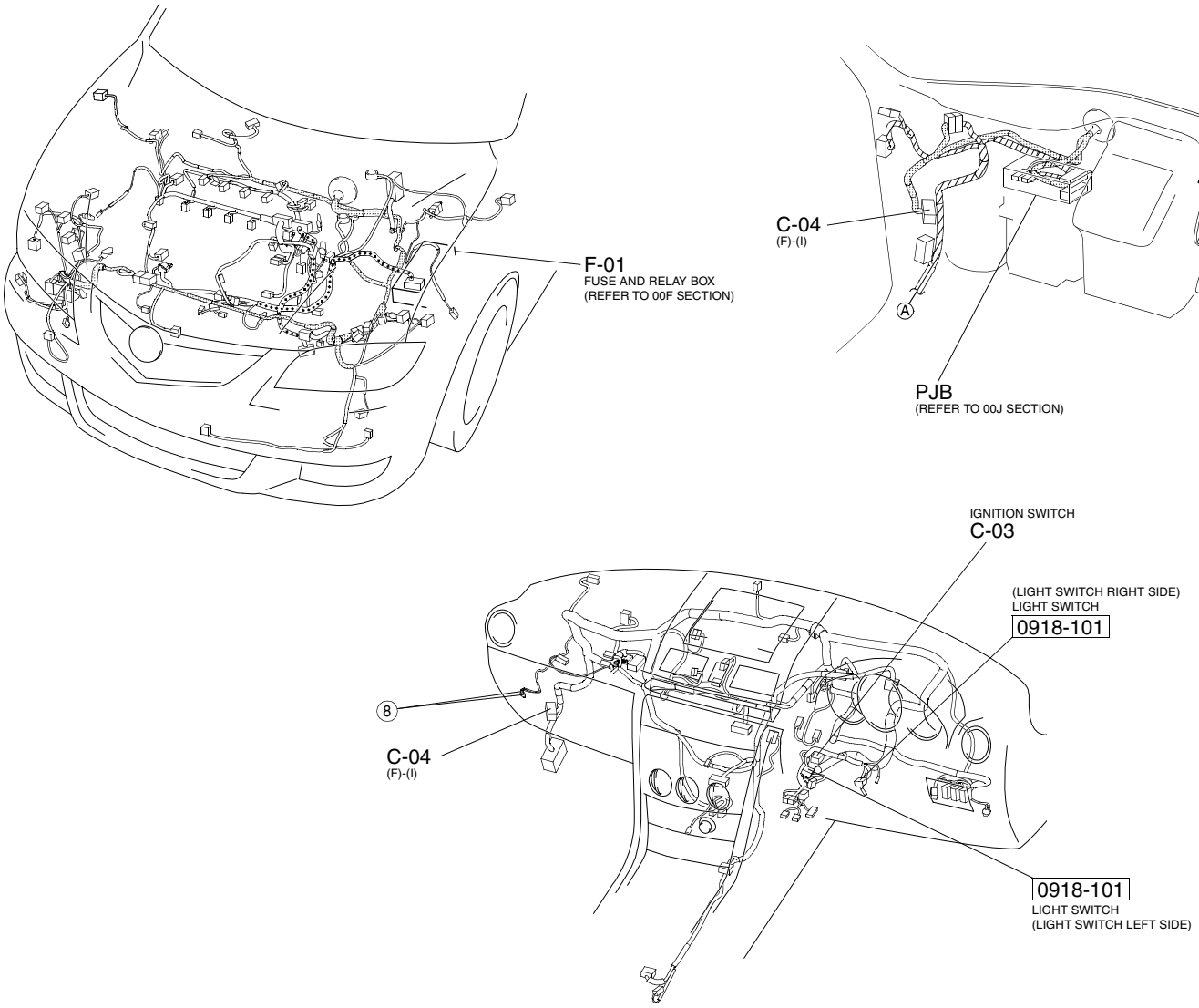

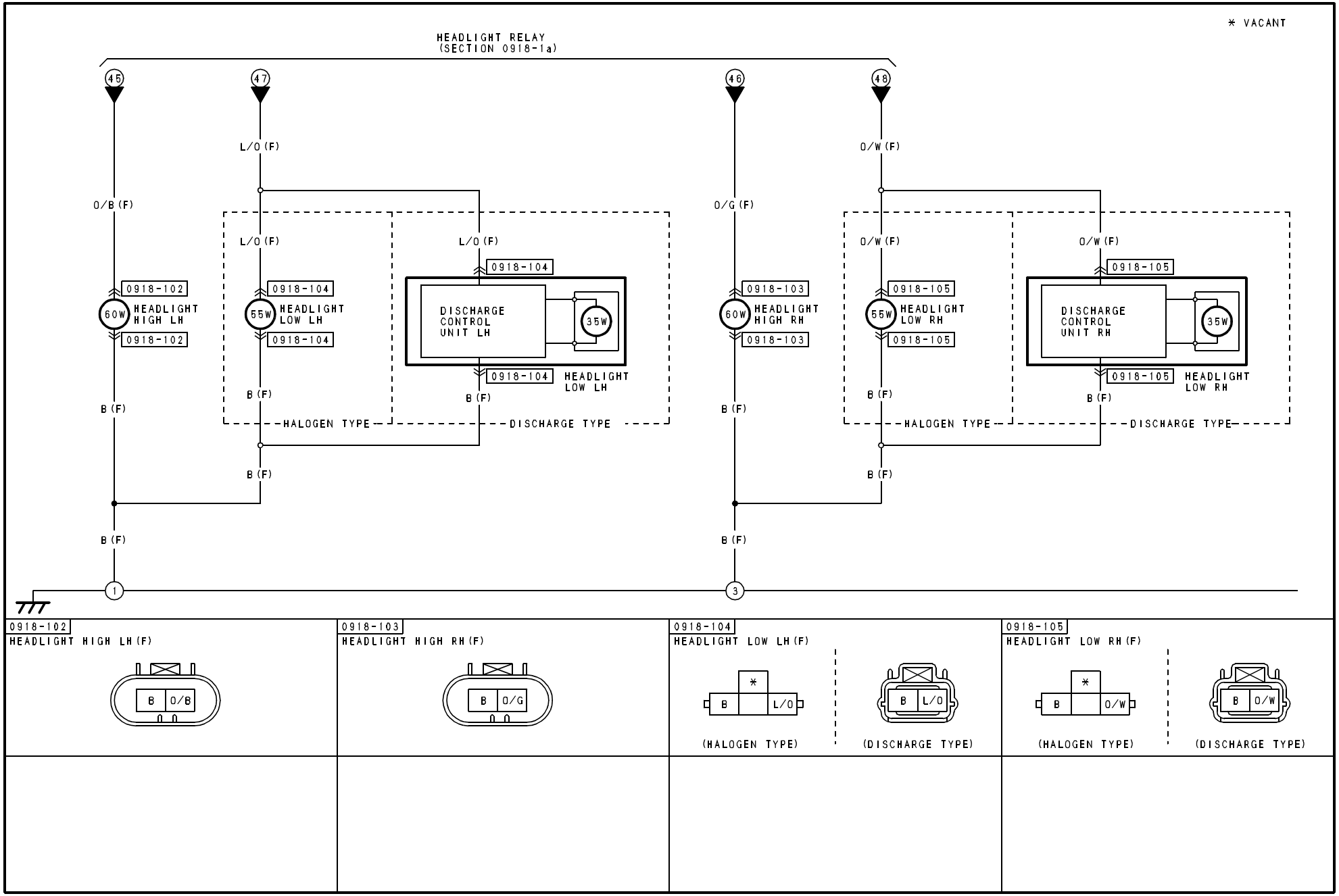
* VACANT
HEADLIGHT RELAY
(SECTION 0918-1a)
45
47
46
48
L/O (F)
O/W (F)
O/B (F)
O/G (F)
L/O (F)
L/O (F)
O/W (F)
O/W (F)
0918-102
60W
HEADLIGHT HIGH LH
0918-102
0918-104
55W
HEADLIGHT LOW LH
0918-104
0918-104
DISCHARGE CONTROL UNIT LH
35W
0918-104
HEADLIGHT LOW LH
0918-103
60W
HEADLIGHT HIGH RH
0918-103
0918-105
55W
HEADLIGHT LOW RH
0918-105
0918-105
DISCHARGE CONTROL UNIT RH
35W
0918-105
HEADLIGHT LOW RH
B (F)
B (F)
B (F)
B (F)
B (F)
B (F)
B (F)
B (F)
HALOGEN TYPE
DISCHARGE TYPE
HALOGEN TYPE
DISCHARGE TYPE
B (F)
B (F)
1
3
0918-102
HEADLIGHT HIGH LH (F)
B
O/B
0918-103
HEADLIGHT HIGH RH (F)
B
O/G
0918-104
HEADLIGHT LOW LH (F)
*
B
L/O
(HALOGEN TYPE)
B
L/O
(DISCHARGE TYPE)
0918-105
HEADLIGHT LOW RH (F)
*
B
O/W
(HALOGEN TYPE)
B
O/W
(DISCHARGE TYPE)

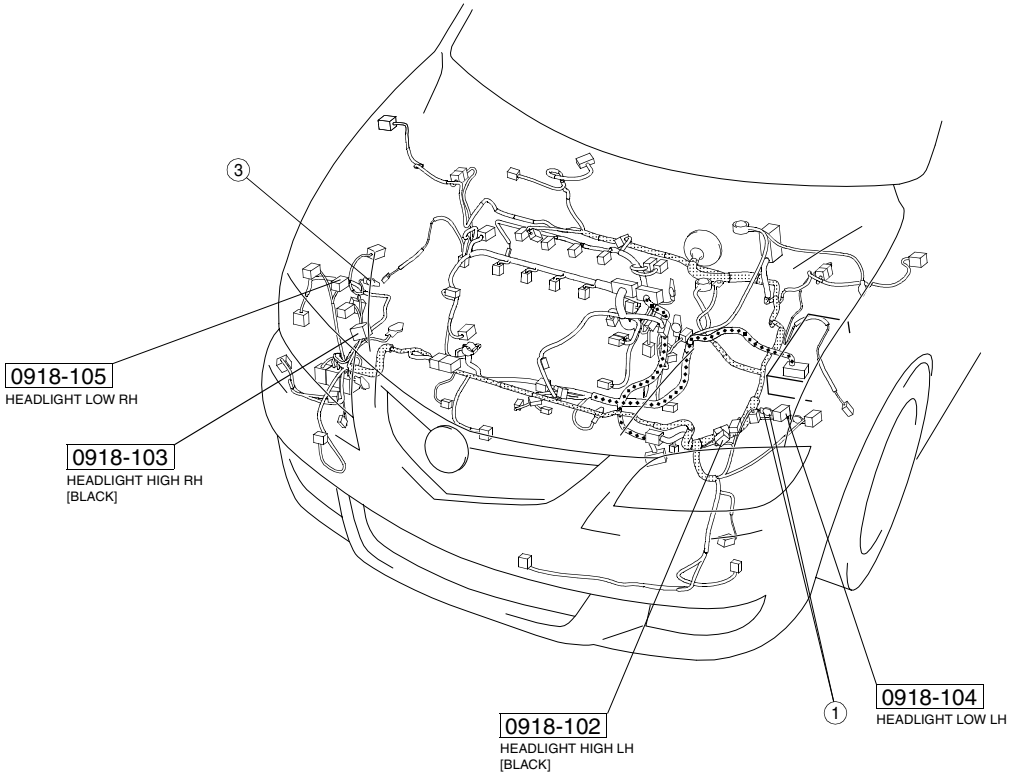

DISCHARGE HEADLIGHT SERVICE WARNINGS

B3E091801051W02

DISCHARGE HEADLIGHT BULB SERVICE WARNINGS

- To prevent electrical shock when replacing the discharge headlight bulb, dry hands thoroughly, and perform the work in an area out of rain.
- When the light switch is on, **approx. 25,000 V** of high voltage passes through the discharge headlight bulb socket. Because of the danger of electrical shock, do not insert fingers or a tester.

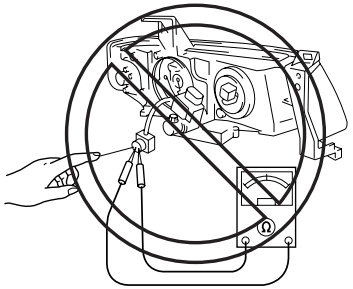

BHE0918W172

- When the headlights are on, high voltage flows around the socket and bulb. When turning on the discharge headlights while working, always leave the headlights in the vehicle-installed condition to prevent electrical shock.

DISCHARGE HEADLIGHT CONTROL MODULE SERVICE WARNINGS

- Because of the danger of electrical shock, when inspecting with a tester, do not inspect the discharge headlight control module as a single unit or disassemble it.

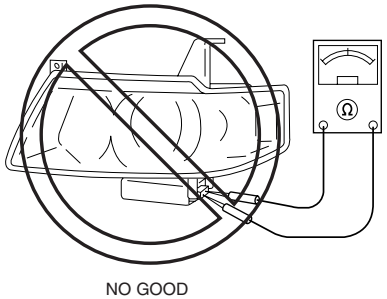

BHE0918W173

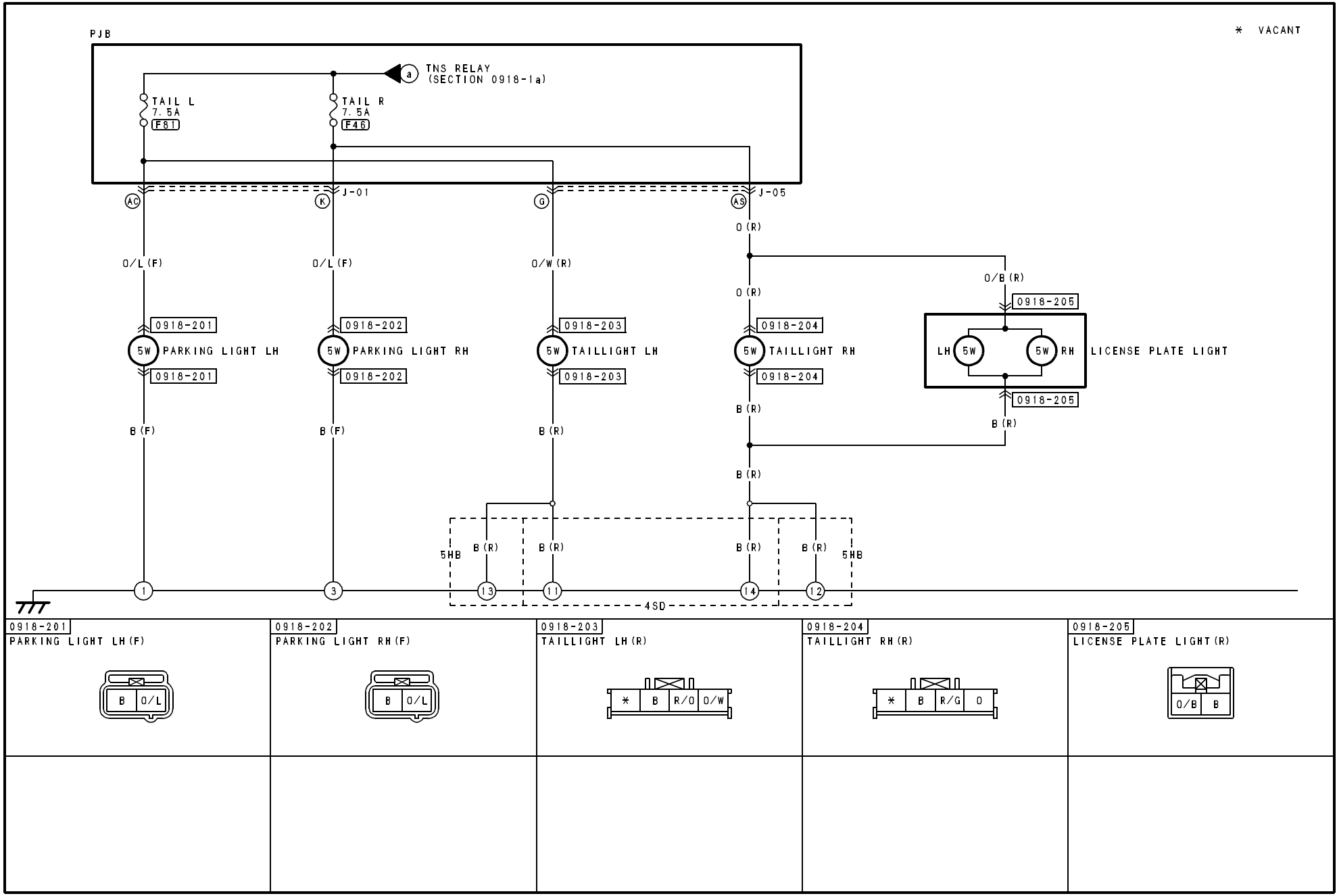
* VACANT
PJB
TNS RELAY
(SECTION 0918-1a)
TAIL L
7.5A
F81
TAIL R
7.5A
F46
J-01
J-05
O/L (F)
O/L (F)
O/W (R)
O (R)
O/B (R)
0918-201
0918-202
0918-203
0918-204
0918-205
5W PARKING LIGHT LH
5W PARKING LIGHT RH
5W TAILLIGHT LH
5W TAILLIGHT RH
LH 5W
5W RH
LICENSE PLATE LIGHT
B (F)
B (F)
B (R)
B (R)
5HB
4SD
0918-201
PARKING LIGHT LH (F)
B O/L
0918-202
PARKING LIGHT RH (F)
B O/L
0918-203
TAILLIGHT LH (R)
* B R/O O/W
0918-204
TAILLIGHT RH (R)
* B R/G O
0918-205
LICENSE PLATE LIGHT (R)
O/B B

HARNESS SYMBOL : (F) (E) (R)

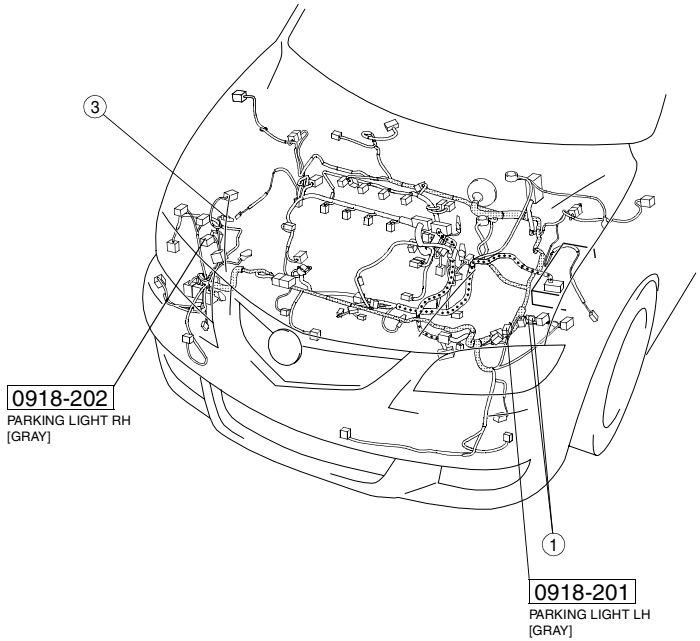

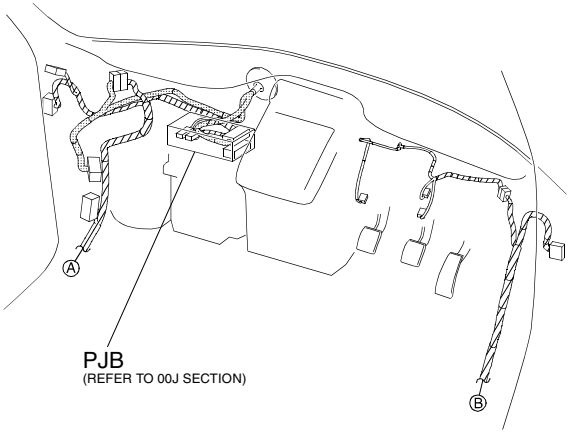

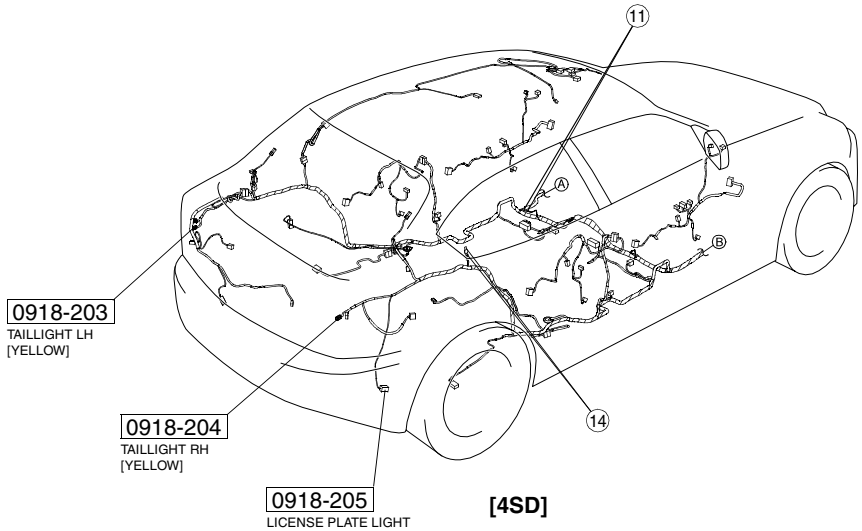

[4SD]

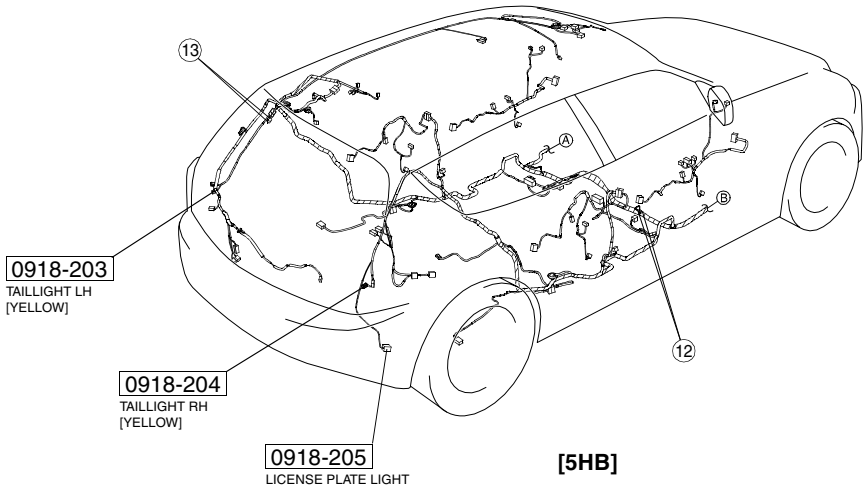

[5HB]

FRONT FOG LIGHT

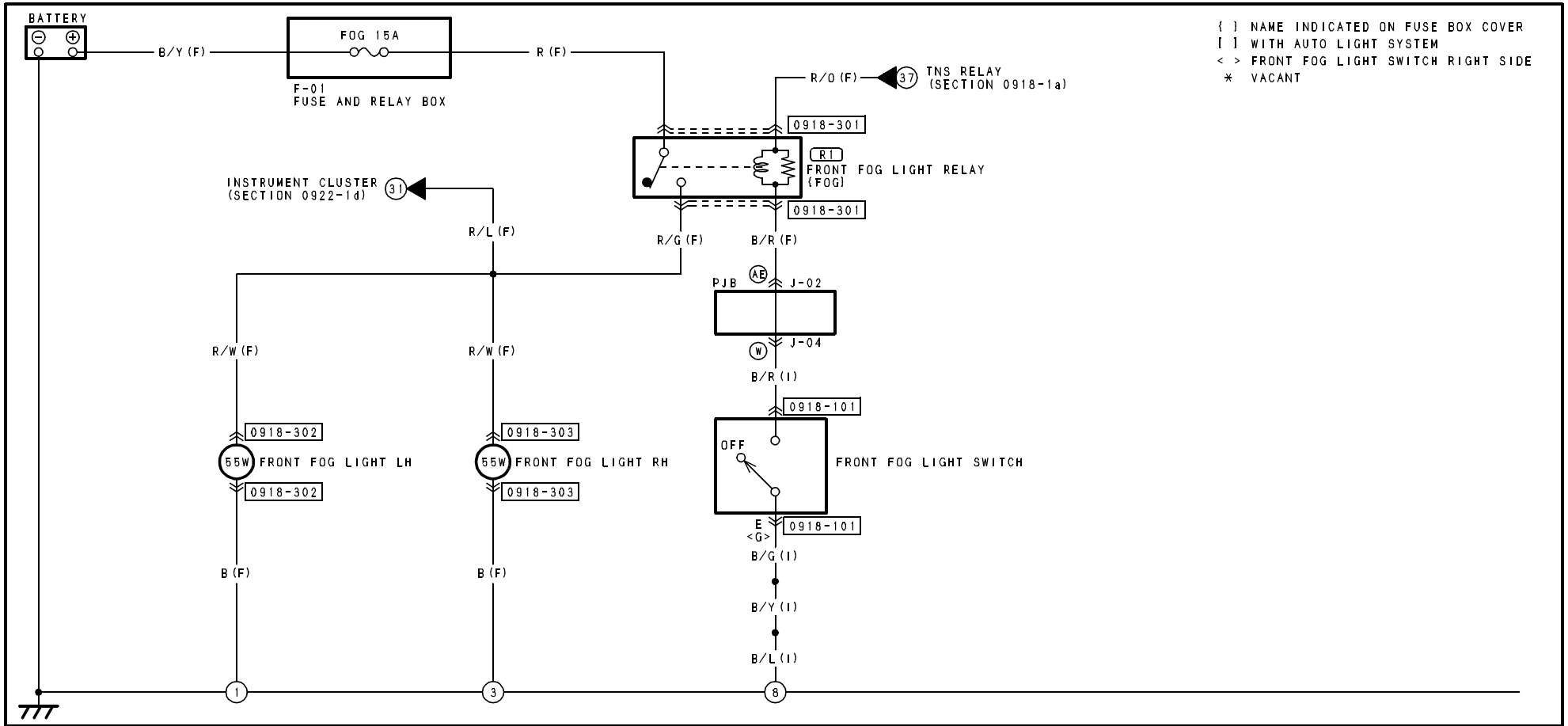

0918-301
FRONT FOG LIGHT RELAY (F)

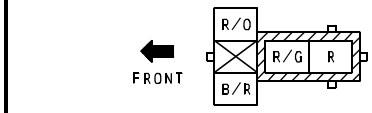

NOTE: SEEN FROM TERMINAL SIDE

0918-302
FRONT FOG LIGHT LH (F)

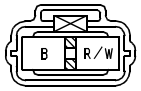

0918-303
FRONT FOG LIGHT RH (F)

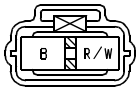

0918-101
FRONT FOG LIGHT SWITCH (I)

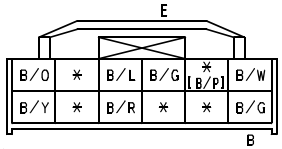

(FRONT FOG LIGHT SWITCH LEFT SIDE)

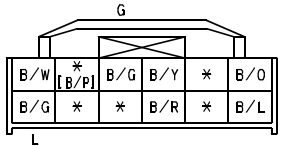

(FRONT FOG LIGHT SWITCH RIGHT SIDE)

HARNESS SYMBOL : (F) (E) (R)

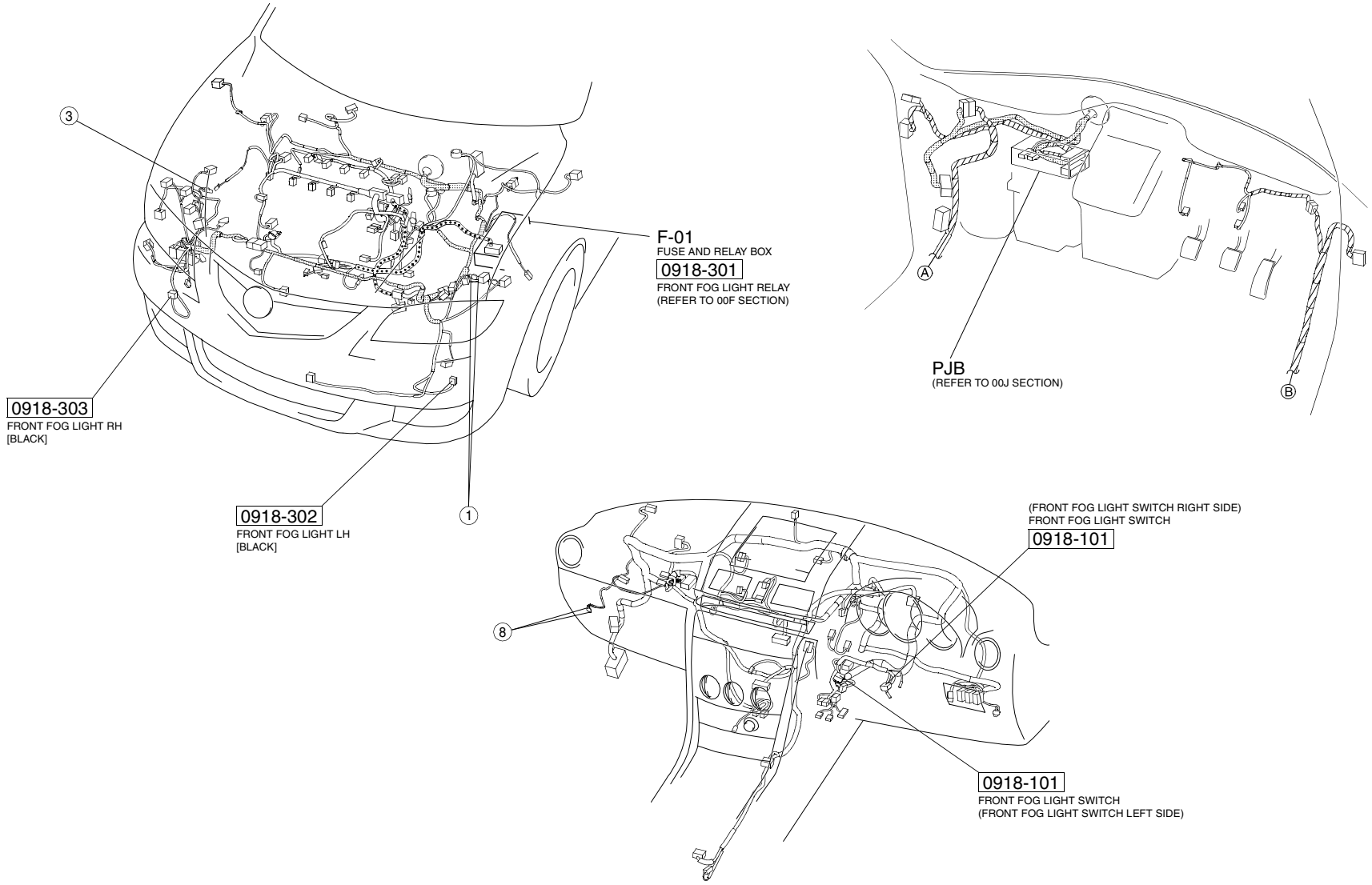

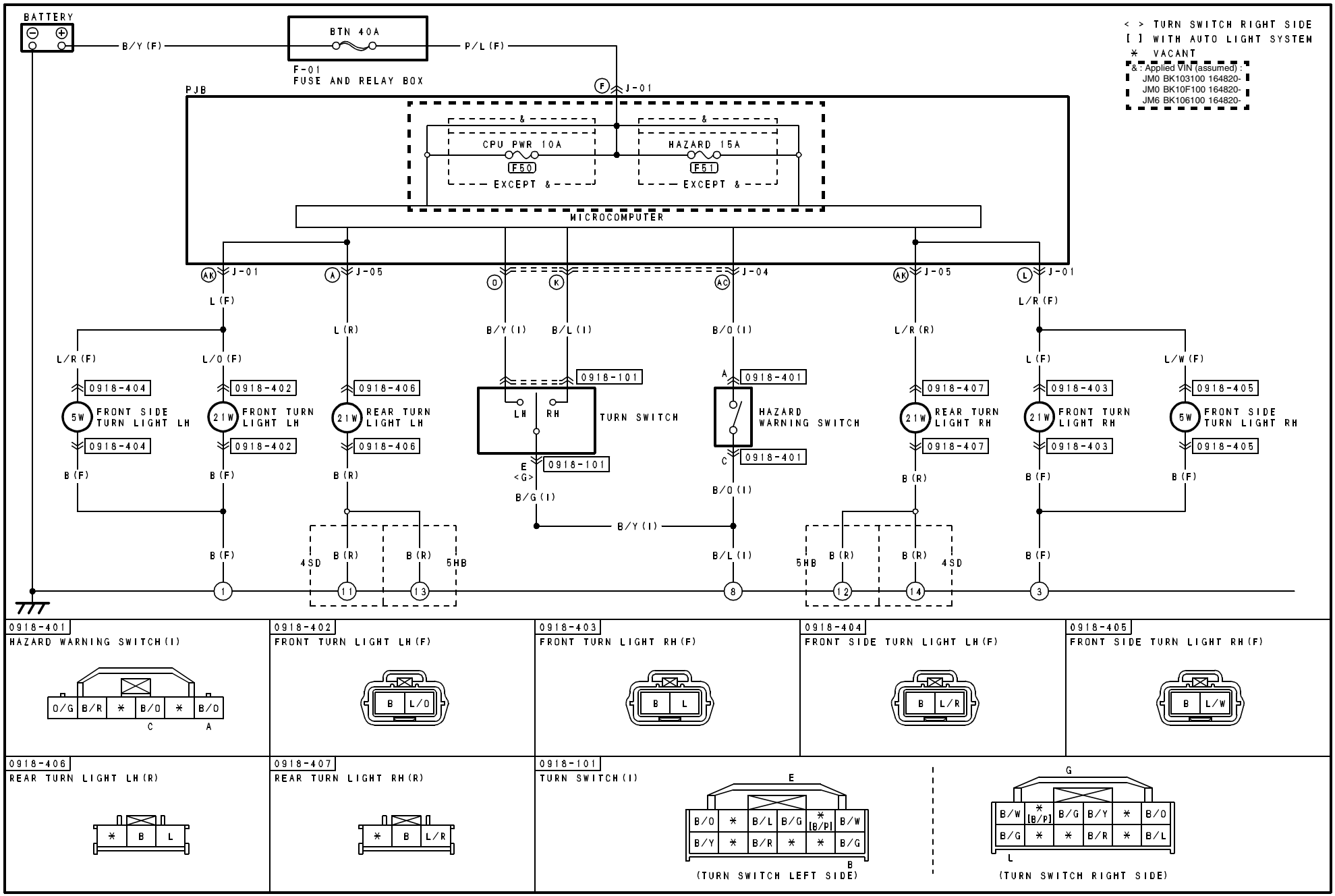
BATTERY
B/Y (F)
BTN 40A
P/L (F)
F-01
FUSE AND RELAY BOX
PJB
J-01
CPU PWR 10A
F50
HAZARD 15A
F51
EXCEPT &
MICROCOMPUTER
< > TURN SWITCH RIGHT SIDE
[ ] WITH AUTO LIGHT SYSTEM
* VACANT
& : Applied VIN (assumed) :
JM0 BK103100 164820-
JM0 BK10F100 164820-
JM6 BK106100 164820-
J-01
J-05
J-04
J-05
J-01
L (F)
L (R)
B/Y (I)
B/L (I)
B/O (I)
L/R (R)
L/R (F)
L/R (F)
L/O (F)
L (F)
L/W (F)
0918-404
0918-402
0918-406
0918-101
0918-401
0918-407
0918-403
0918-405
5W
FRONT SIDE TURN LIGHT LH
21W
FRONT TURN LIGHT LH
21W
REAR TURN LIGHT LH
LH
RH
TURN SWITCH
HAZARD WARNING SWITCH
21W
REAR TURN LIGHT RH
21W
FRONT TURN LIGHT RH
5W
FRONT SIDE TURN LIGHT RH
B (F)
B (F)
B (R)
E
<G>
B/G (I)
B/O (I)
B (R)
B (F)
B (F)
B/Y (I)
B (F)
4SD
B (R)
B (R)
5HB
B/L (I)
5HB
B (R)
B (R)
4SD
B (F)
1
11
13
8
12
14
3
0918-401
HAZARD WARNING SWITCH (I)
O/G
B/R
*
B/O
*
B/O
C
A
0918-402
FRONT TURN LIGHT LH (F)
B
L/O
0918-403
FRONT TURN LIGHT RH (F)
B
L
0918-404
FRONT SIDE TURN LIGHT LH (F)
B
L/R
0918-405
FRONT SIDE TURN LIGHT RH (F)
B
L/W
0918-406
REAR TURN LIGHT LH (R)
*
B
L
0918-407
REAR TURN LIGHT RH (R)
*
B
L/R
0918-101
TURN SWITCH (I)
E
B/O
*
B/L
B/G
*
[B/P]
B/W
B/Y
*
B/R
*
*
B/G
B
(TURN SWITCH LEFT SIDE)
G
B/W
*
[B/P]
B/G
B/Y
*
B/O
B/G
*
*
B/R
*
B/L
L
(TURN SWITCH RIGHT SIDE)

HARNESS SYMBOL : (F) (E) (R)

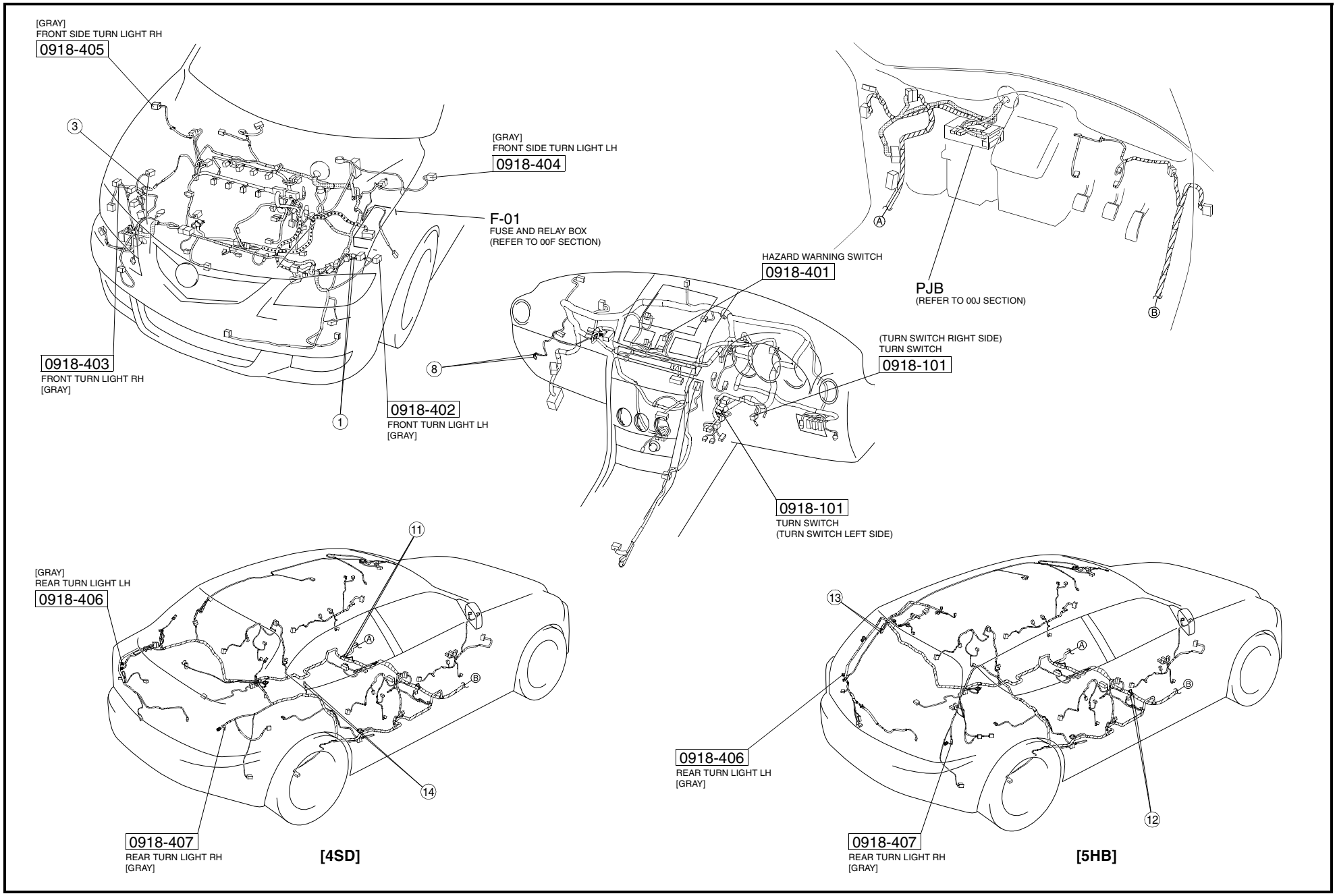

BACK-UP LIGHT

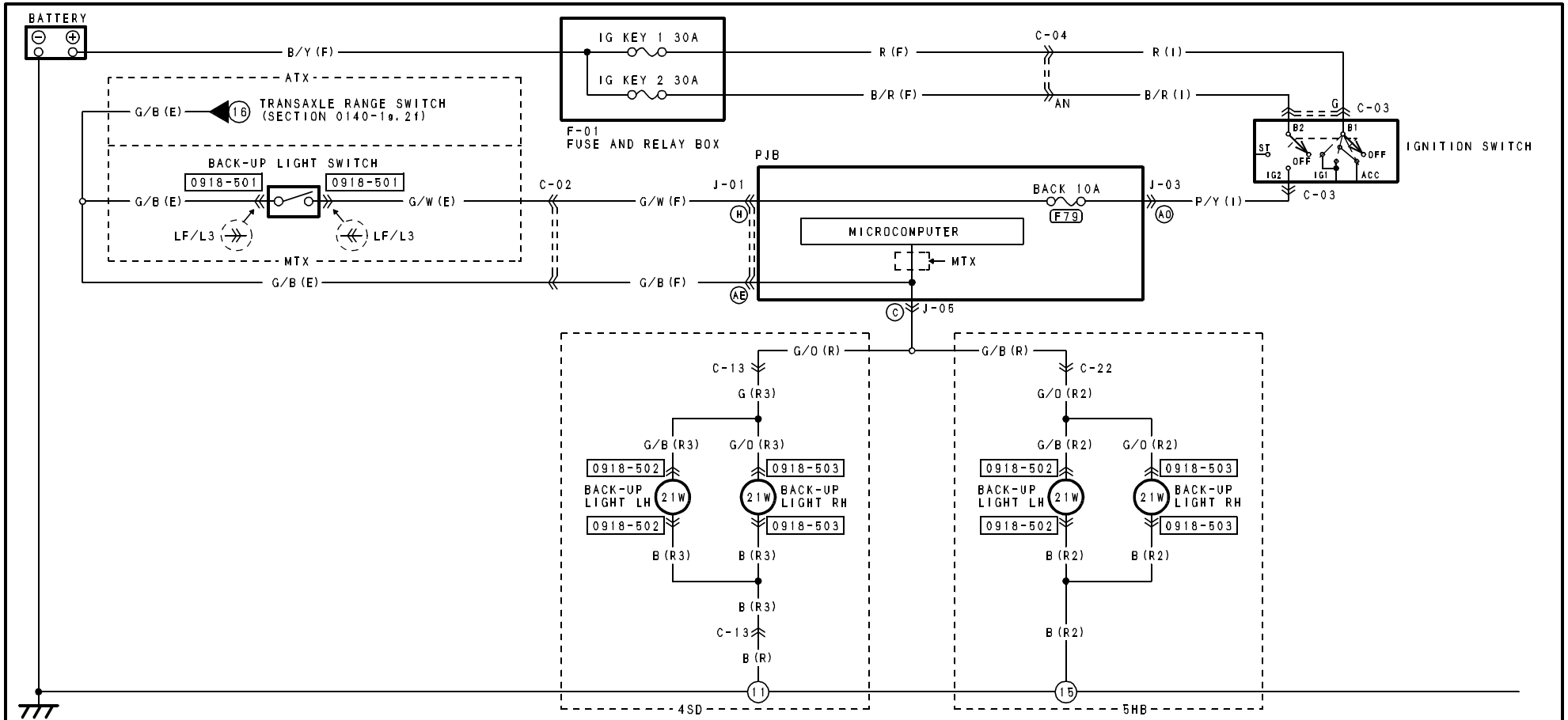

0918-501 BACK-UP LIGHT SWITCH (E)		0918-502 BACK-UP LIGHT LH		0918-503 BACK-UP LIGHT RH	
G/W G/B (Z6/ZY)	G/B G/W (LF/L3) (MTX)	(R3) B G/B (4SD)	(R2) B G/B (5HB)	(R3) B G/O (4SD)	(R2) B G/O (5HB)

HARNESS SYMBOL : (F) (E) (R)

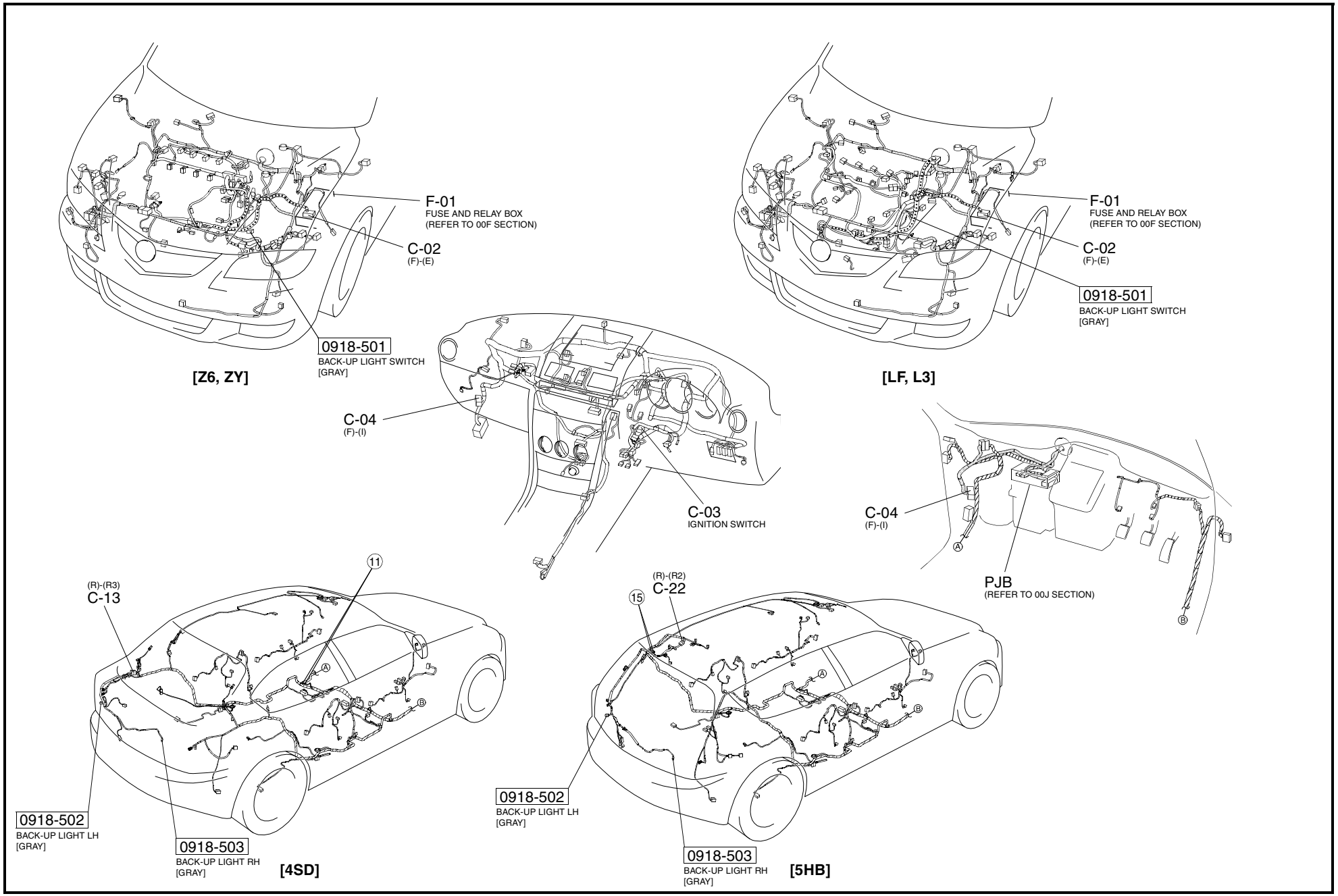

BRAKE LIGHT/HIGH-MOUNT BRAKE LIGHT

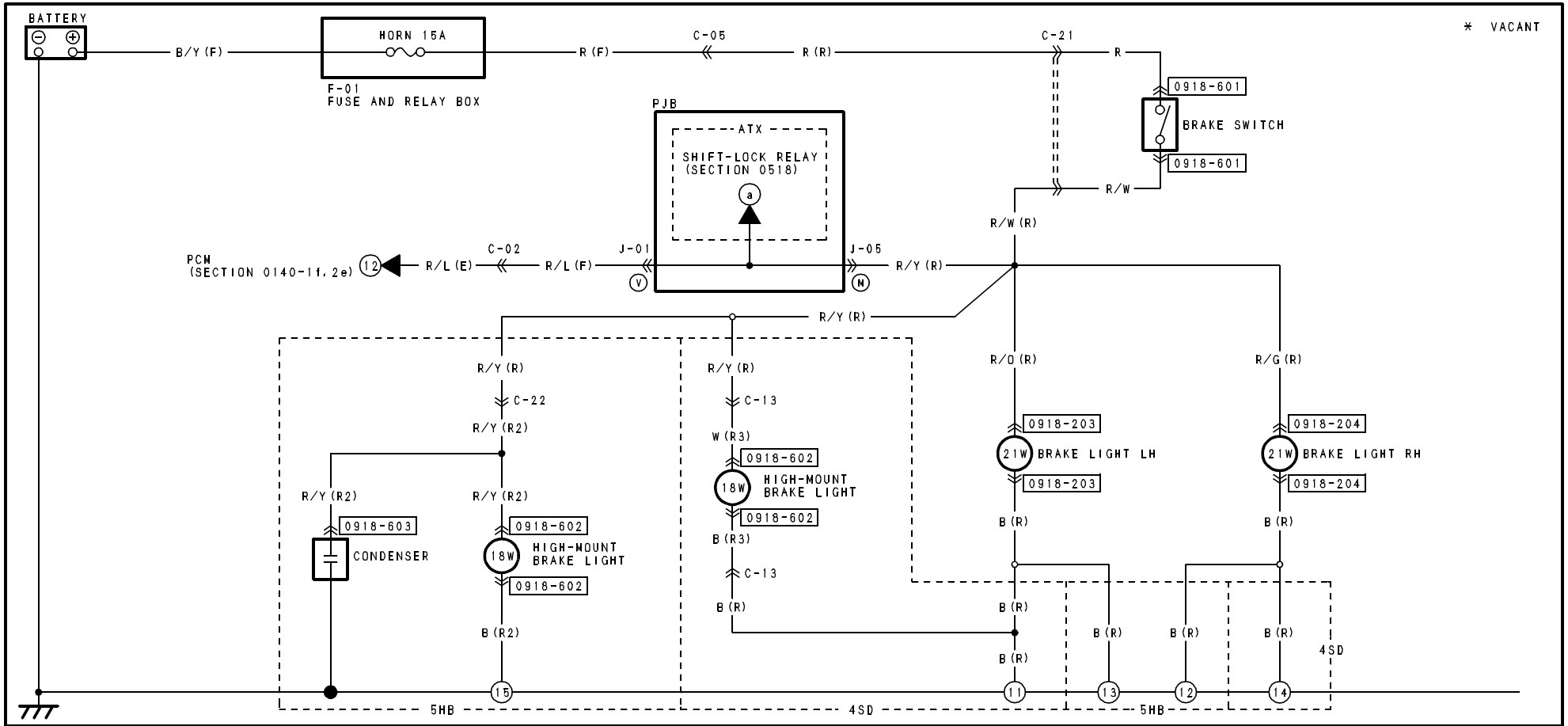

0918-601 BRAKE SWITCH (SHORT CORD)	0918-602 HIGH-MOUNT BRAKE LIGHT		0918-603 CONDENSER (R2)	0918-203 BRAKE LIGHT LH (R)	0918-204 BRAKE LIGHT RH (R)
R/W | * | * | R	(R3) B | W (4SD)	(R2) B | R/Y (5HB)	R/Y (5HB)	* | B | R/O | O/W	* | B | R/G | O

HARNESS SYMBOL : (F) (E) (R)

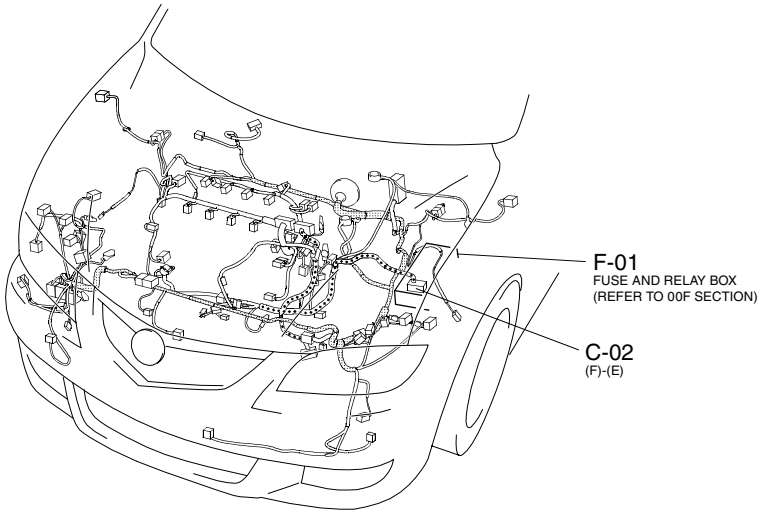

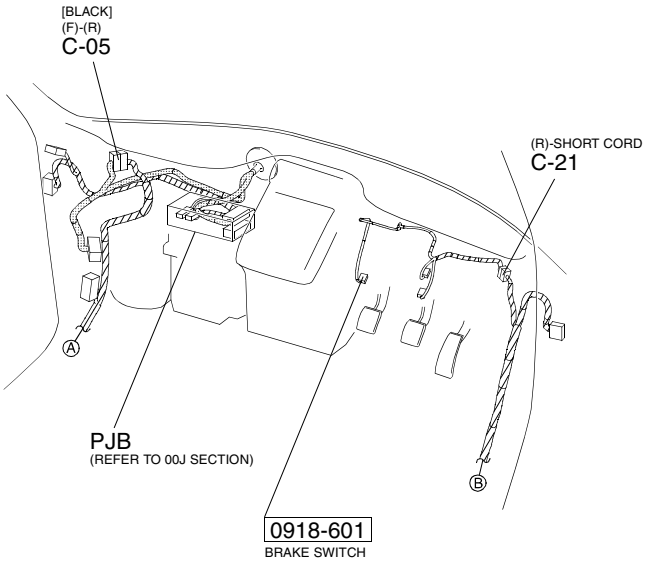

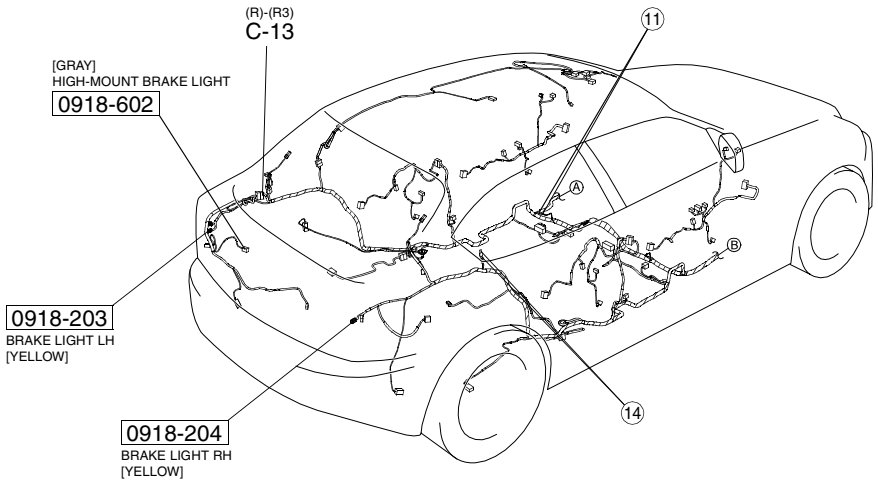

[4SD]

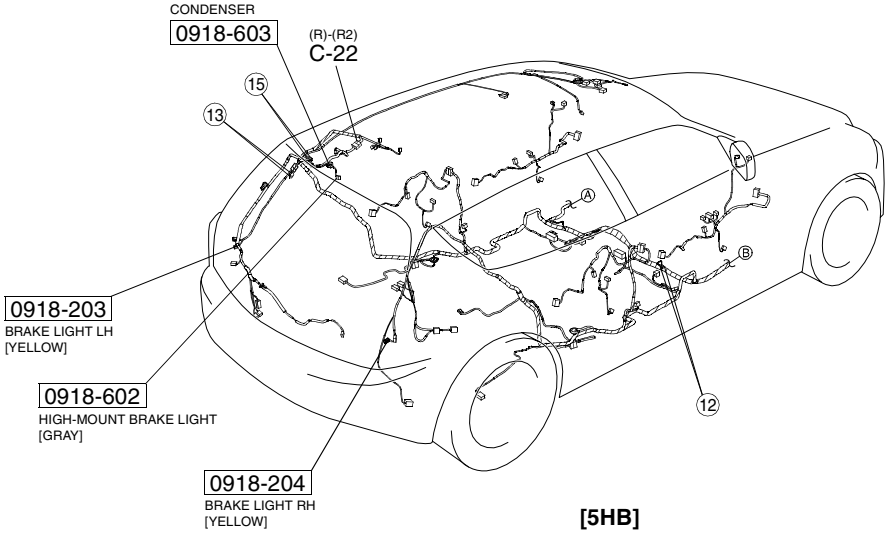

[5HB]

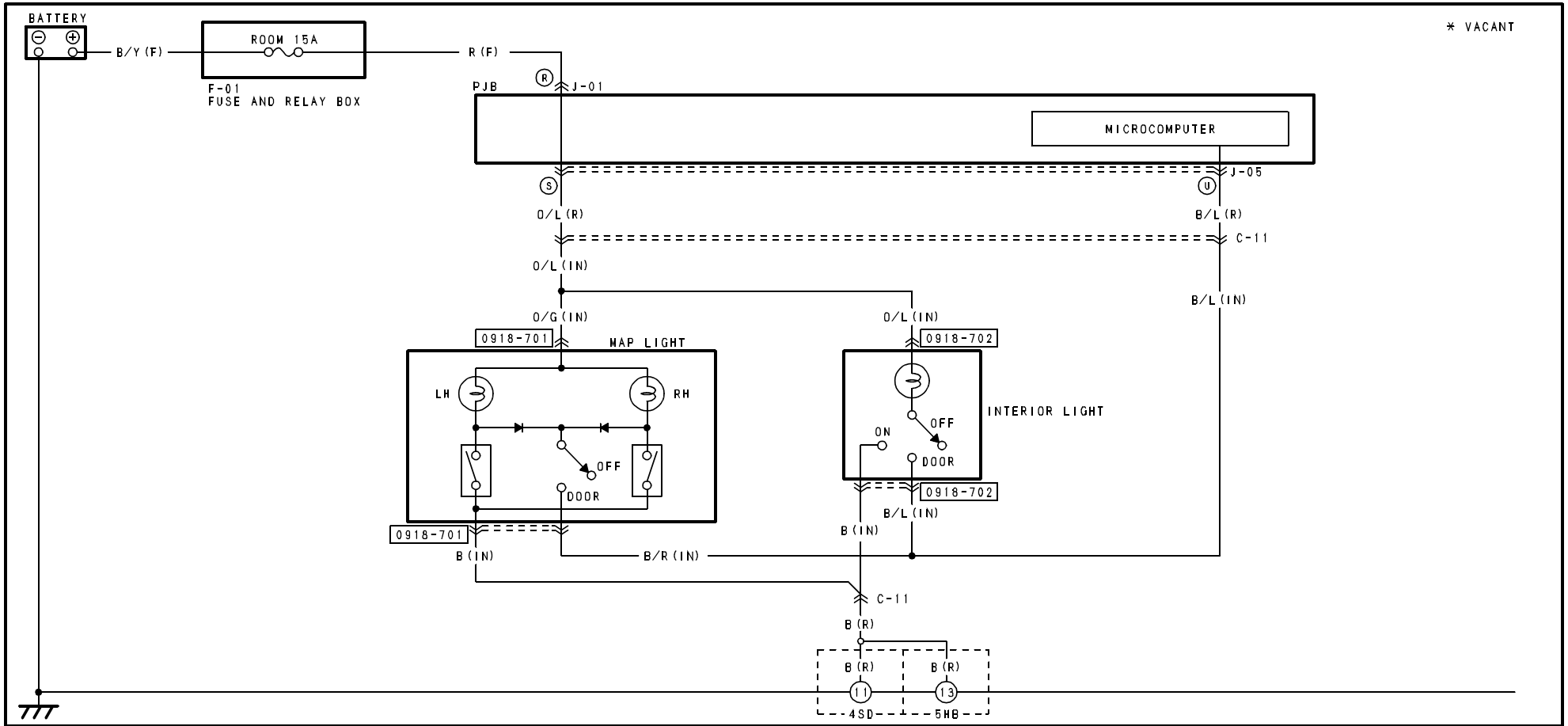

0918-701 MAP LIGHT (IN)	0918-702 INTERIOR LIGHT (IN)		
* B/R O/G B	O/L B/L B *		

HARNESS SYMBOL : (F) (E) (R)

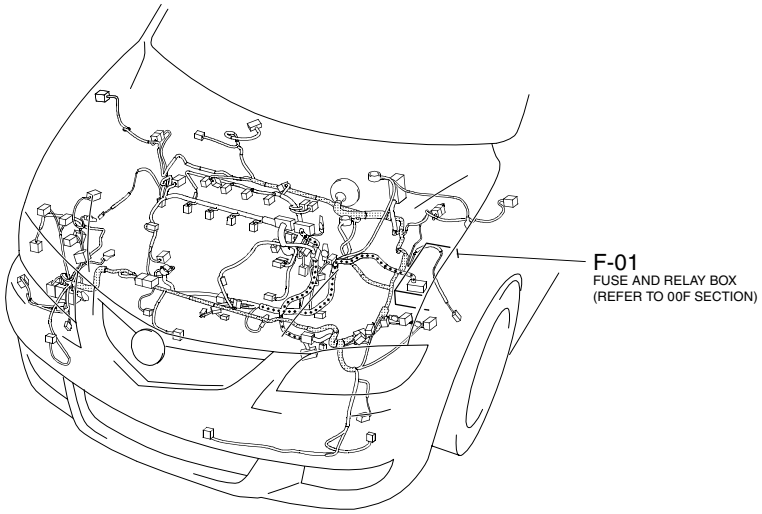

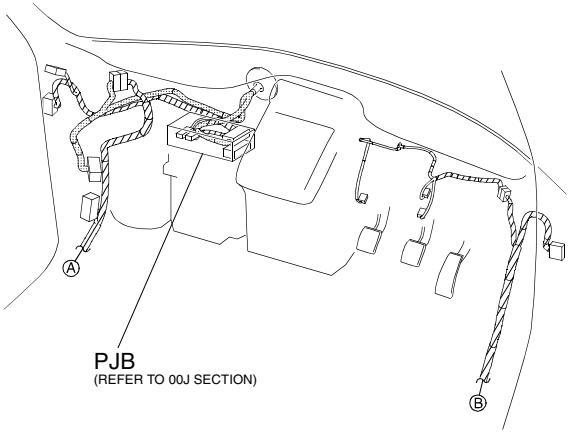

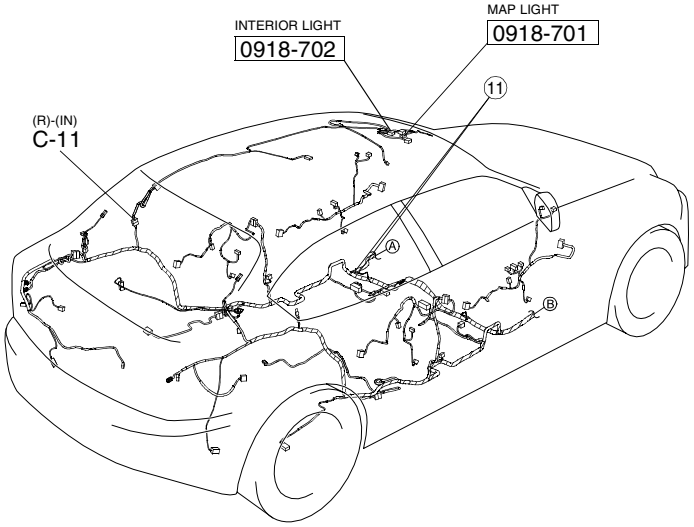

[4SD]

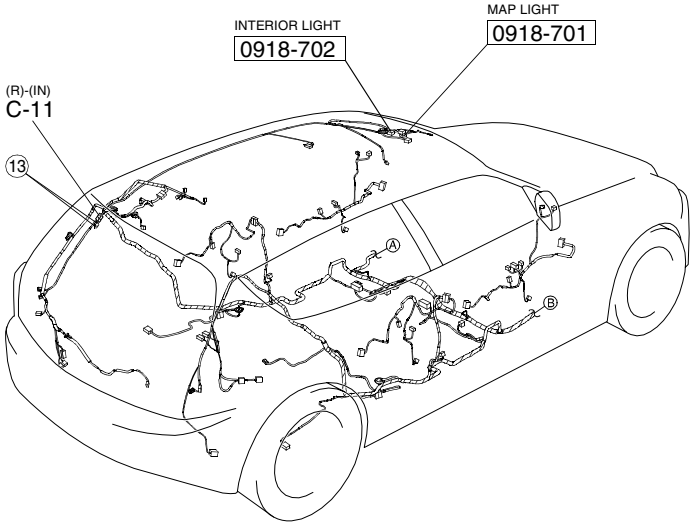

[5HB]

CARGO COMPARTMENT LIGHT (5HB) /TRUNK COMPARTMENT LIGHT (4SD)

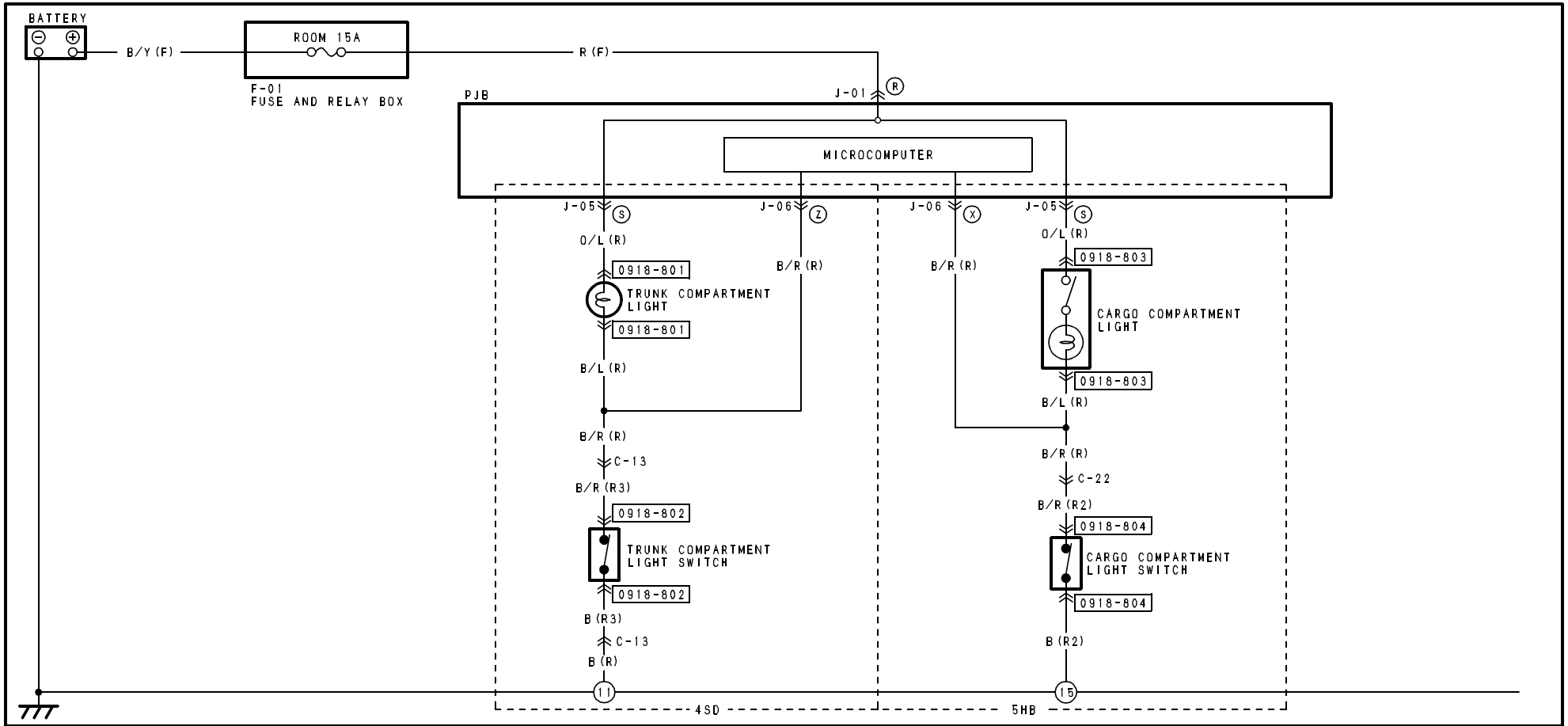

0918-801	0918-802	0918-803	0918-804
TRUNK COMPARTMENT LIGHT (R)	TRUNK COMPARTMENT LIGHT SWITCH (R3)	CARGO COMPARTMENT LIGHT (R)	CARGO COMPARTMENT LIGHT SWITCH (R2)
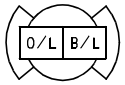	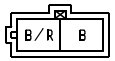		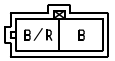
(4SD)	(4SD)	(5HB)	(5HB)

HARNESS SYMBOL : (F) (E) (R)

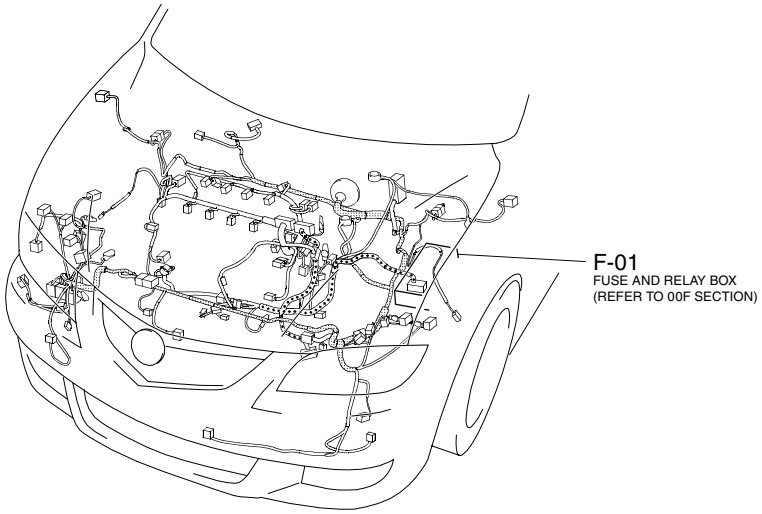

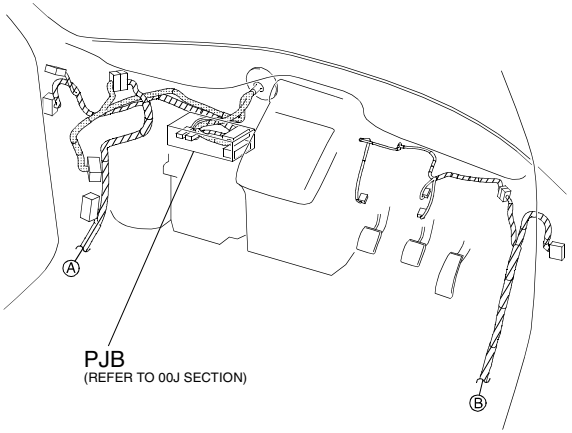

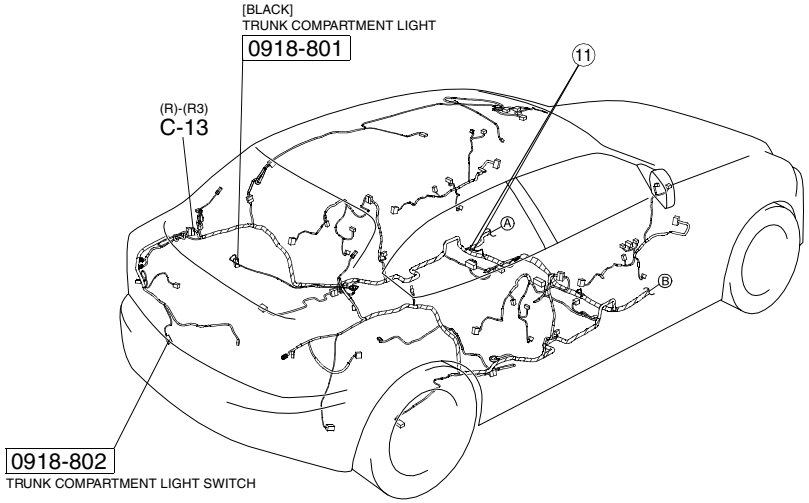

[4SD]

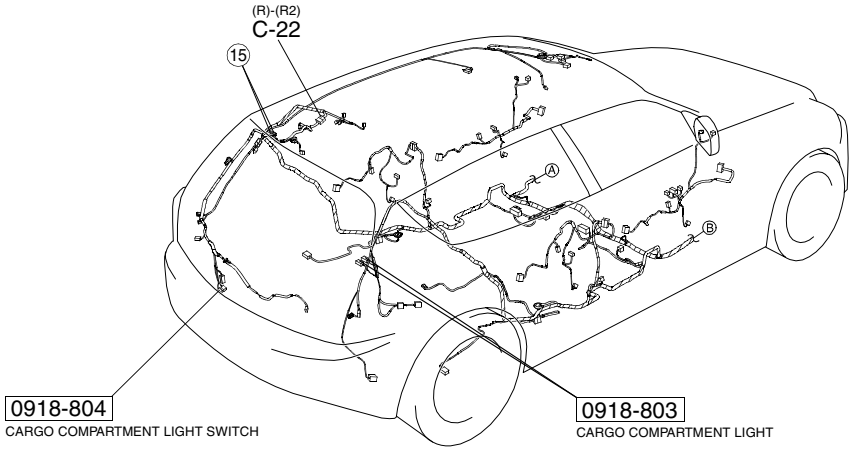

[5HB]

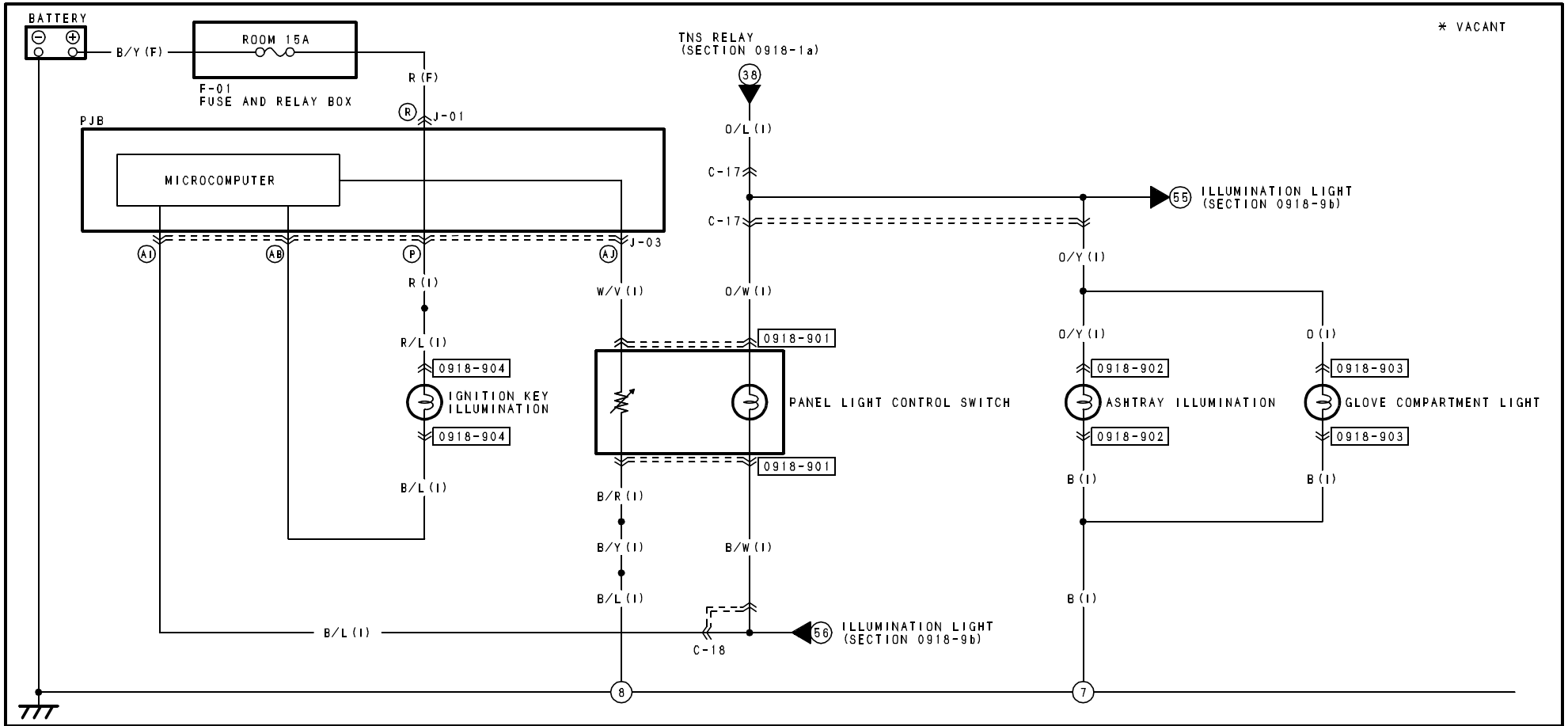

0918-901 PANEL LIGHT CONTROL SWITCH (I)	0918-902 ASHTRAY ILLUMINATION (I)	0918-903 GLOVE COMPARTMENT LIGHT (I)	0918-904 IGNITION KEY ILLUMINATION (I)
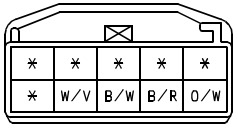	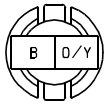	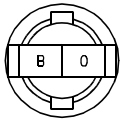	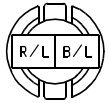

HARNESS SYMBOL : (F) (E) (R)

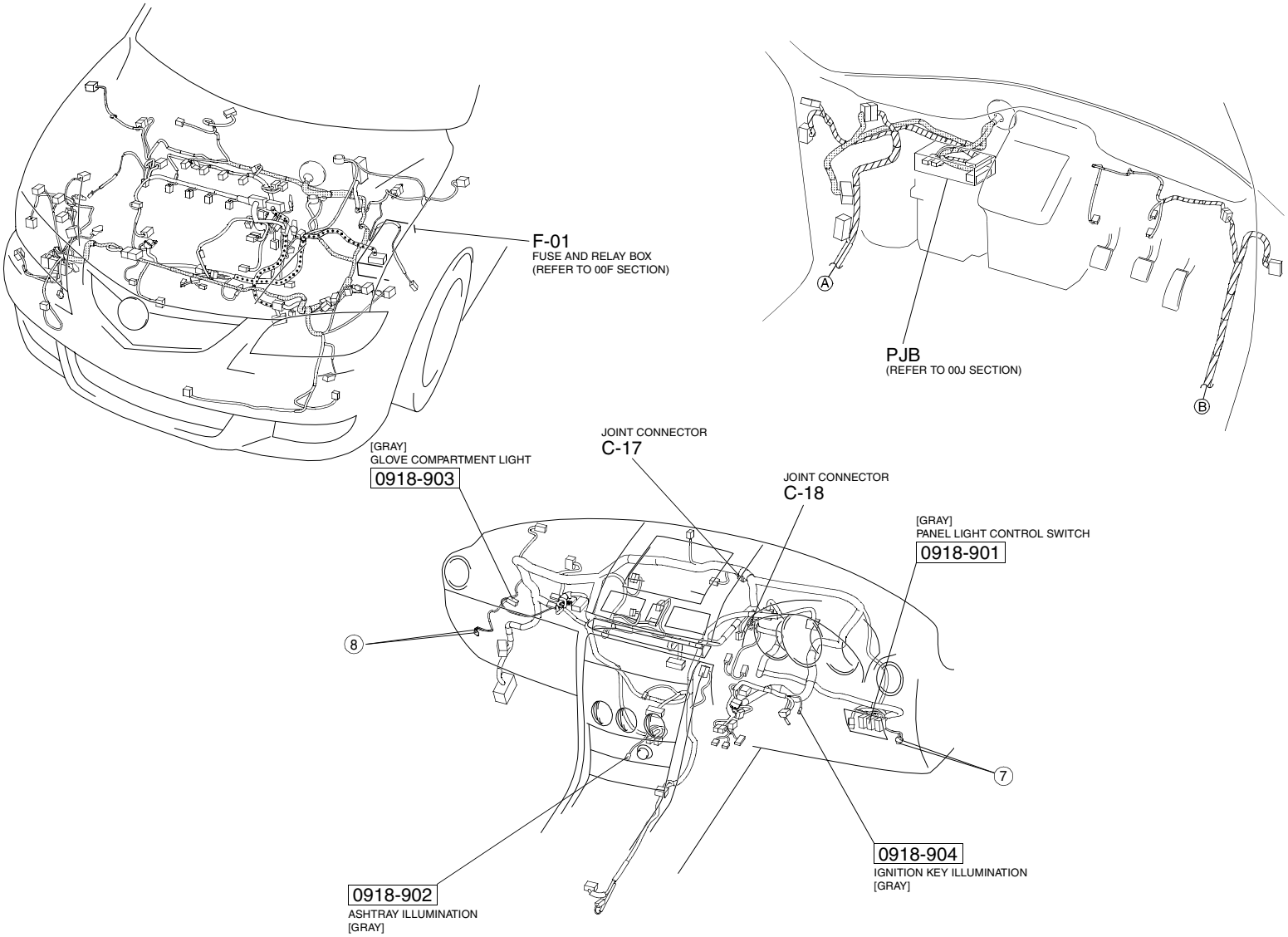

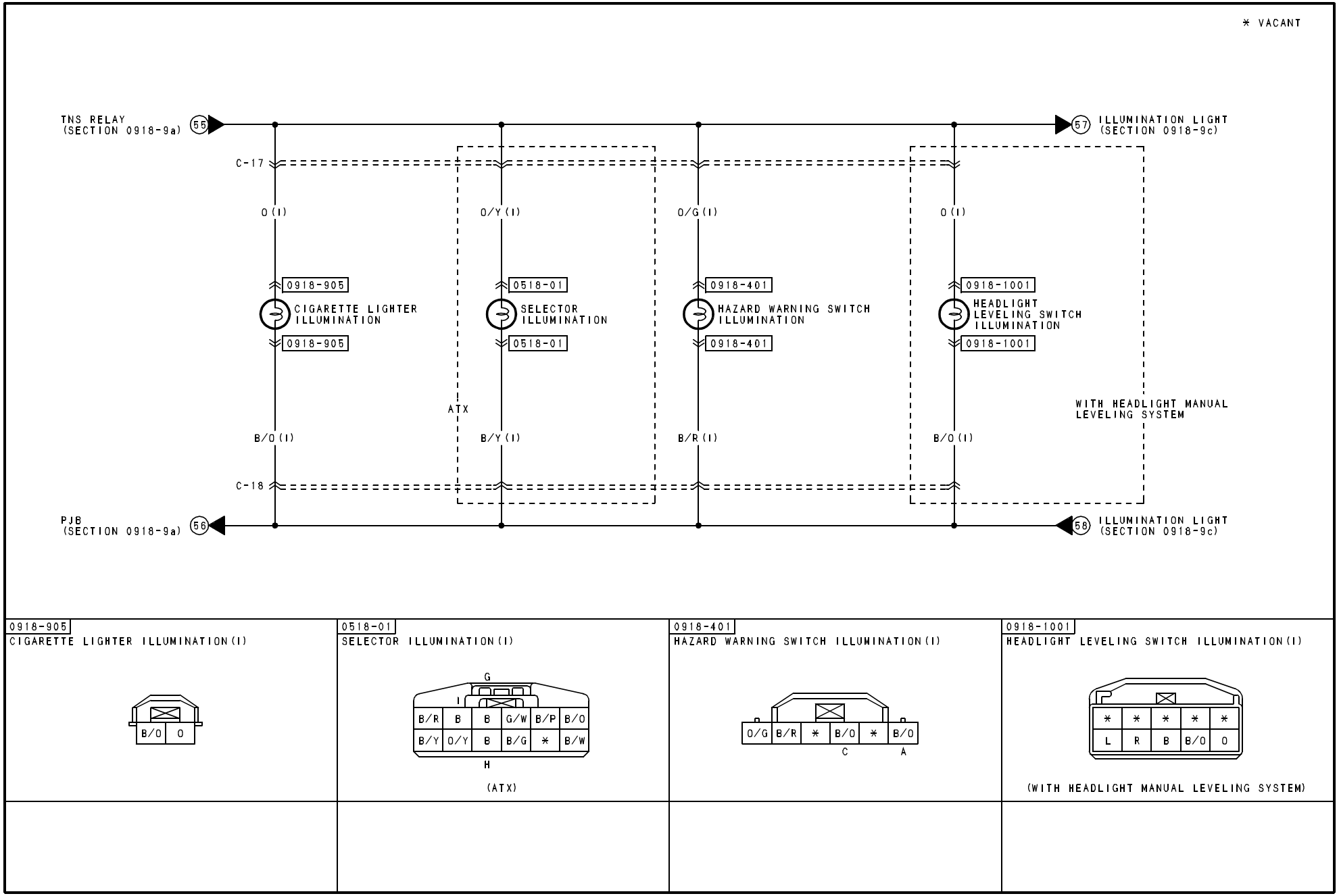
* VACANT
TNS RELAY (SECTION 0918-9a)
55
57
ILLUMINATION LIGHT (SECTION 0918-9c)
C-17
O (I)
O/Y (I)
O/G (I)
O (I)
0918-905
CIGARETTE LIGHTER ILLUMINATION
0918-905
0518-01
SELECTOR ILLUMINATION
0518-01
0918-401
HAZARD WARNING SWITCH ILLUMINATION
0918-401
0918-1001
HEADLIGHT LEVELING SWITCH ILLUMINATION
0918-1001
ATX
WITH HEADLIGHT MANUAL LEVELING SYSTEM
B/O (I)
B/Y (I)
B/R (I)
B/O (I)
C-18
PJB (SECTION 0918-9a)
56
58
ILLUMINATION LIGHT (SECTION 0918-9c)
0918-905
CIGARETTE LIGHTER ILLUMINATION (I)
B/O
O
0518-01
SELECTOR ILLUMINATION (I)
G
I
B/R B B G/W B/P B/O
B/Y O/Y B B/G * B/W
H
(ATX)
0918-401
HAZARD WARNING SWITCH ILLUMINATION (I)
O/G B/R * B/O * B/O
C A
0918-1001
HEADLIGHT LEVELING SWITCH ILLUMINATION (I)
* * * * *
L R B B/O O
(WITH HEADLIGHT MANUAL LEVELING SYSTEM)

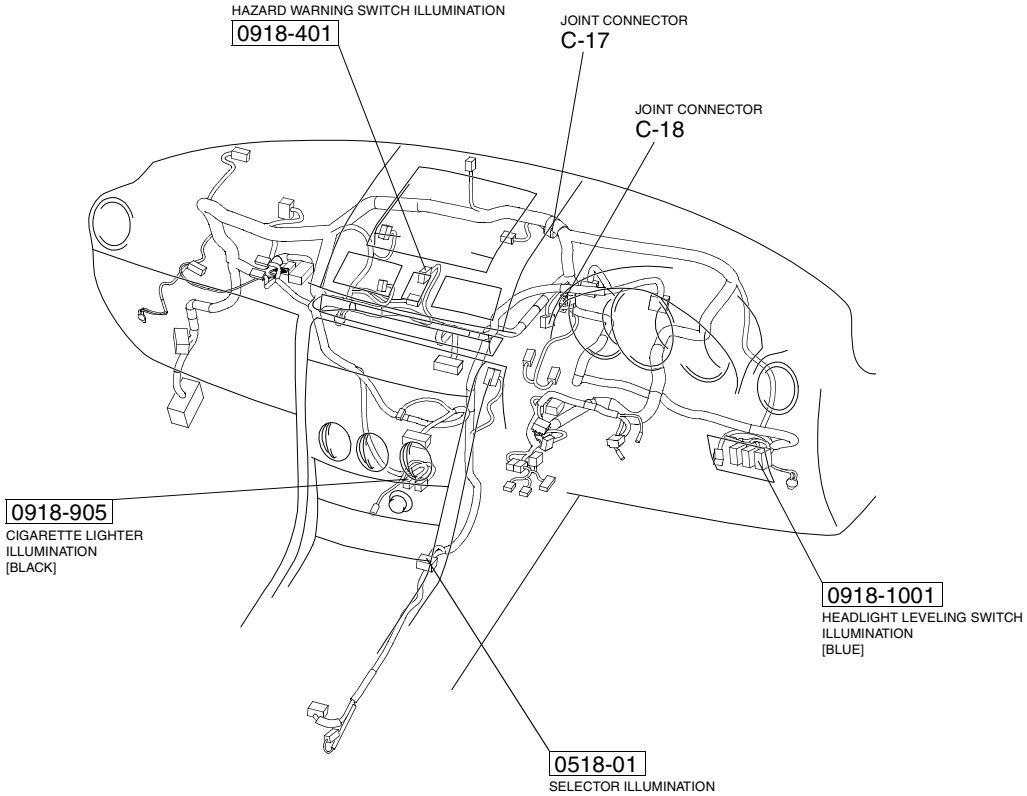
HAZARD WARNING SWITCH ILLUMINATION
0918-401
JOINT CONNECTOR
C-17
JOINT CONNECTOR
C-18
0918-905
CIGARETTE LIGHTER
ILLUMINATION
[BLACK]
0918-1001
HEADLIGHT LEVELING SWITCH
ILLUMINATION
[BLUE]
0518-01
SELECTOR ILLUMINATION

@ WITH AUDIO CONTROL SWITCH
# WITH AUTO A/C
* VACANT

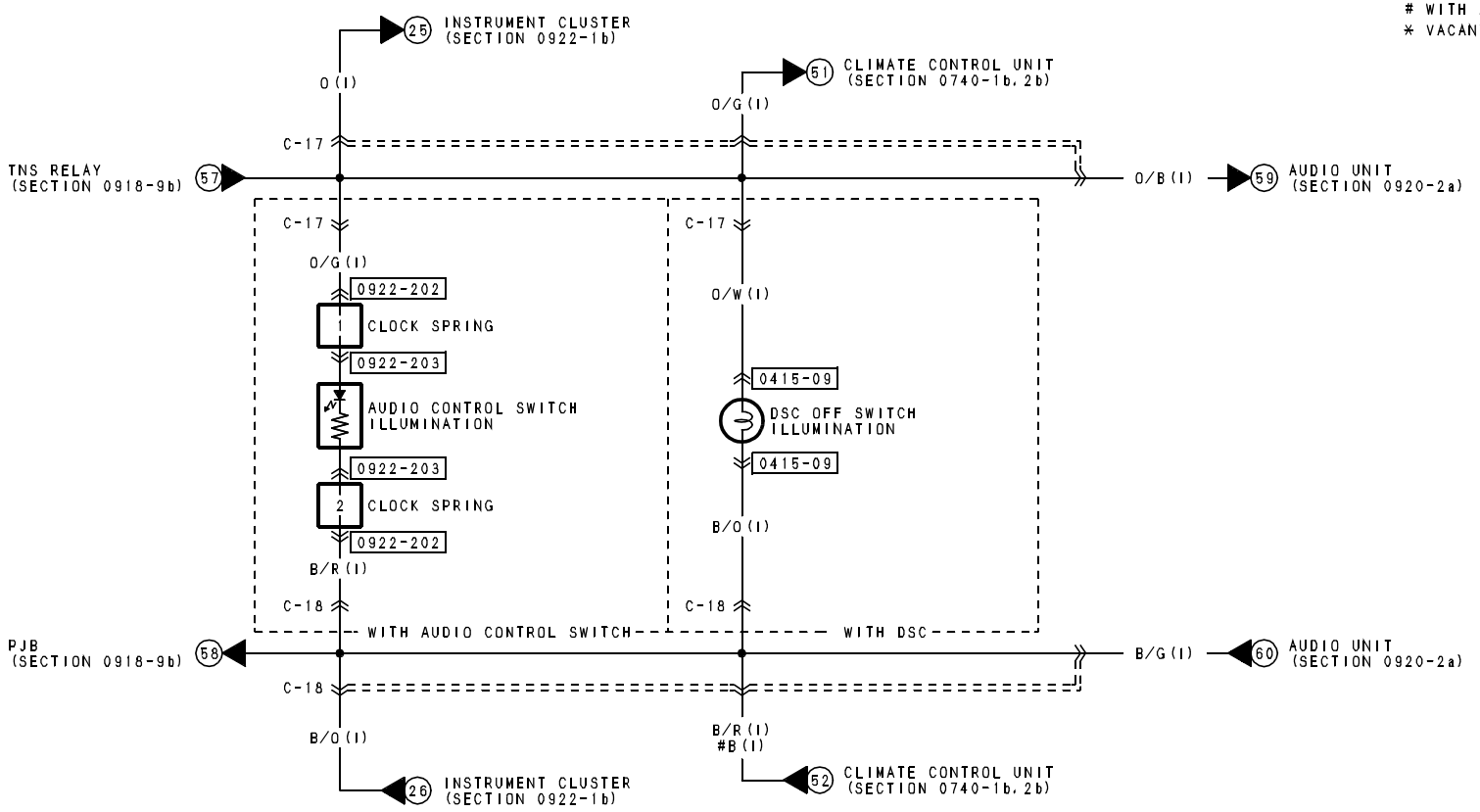

0415-09
DSC OFF SWITCH ILLUMINATION (I)

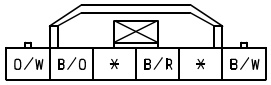

(WITH DSC)

0922-202
INSTRUMENT PANEL (I) -CLOCK SPRING

(I)

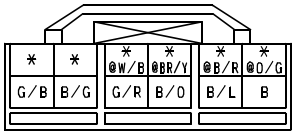

(CLOCK SPRING)

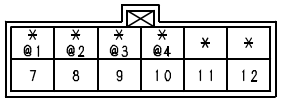

TERMINALS OF THIS CONNECTOR ARE INDICATED BY NUMBERS.

0922-203
AUDIO CONTROL SWITCH ILLUMINATION (CLOCK SPRING)

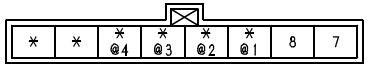

TERMINALS OF THIS CONNECTOR ARE INDICATED BY NUMBERS.

HARNESS SYMBOL : (F) (E) (R)

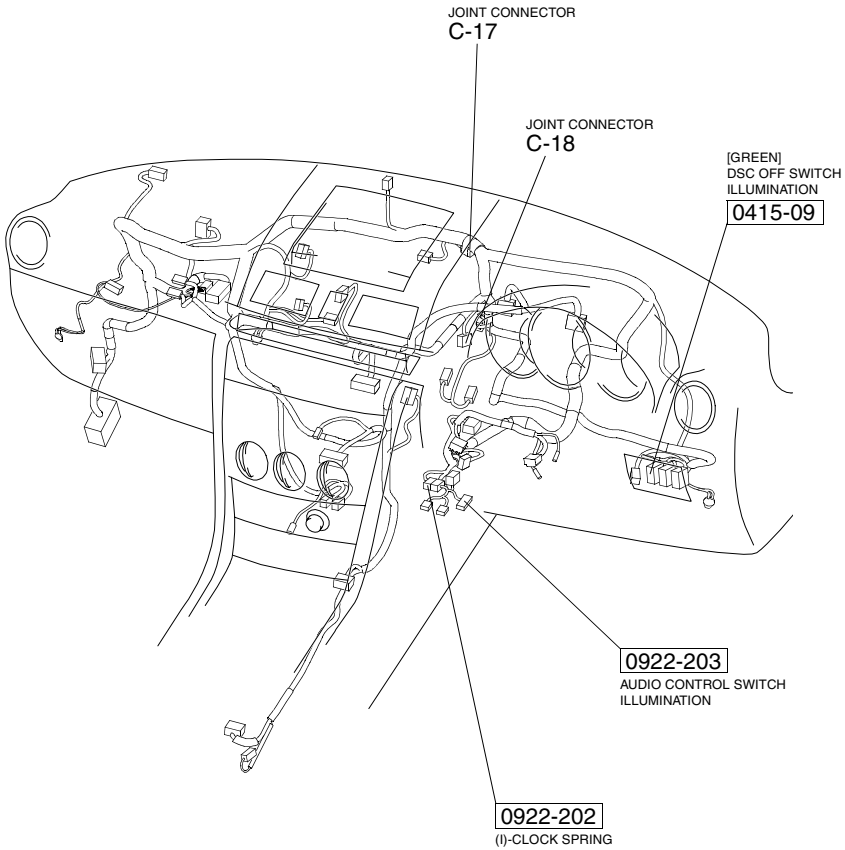

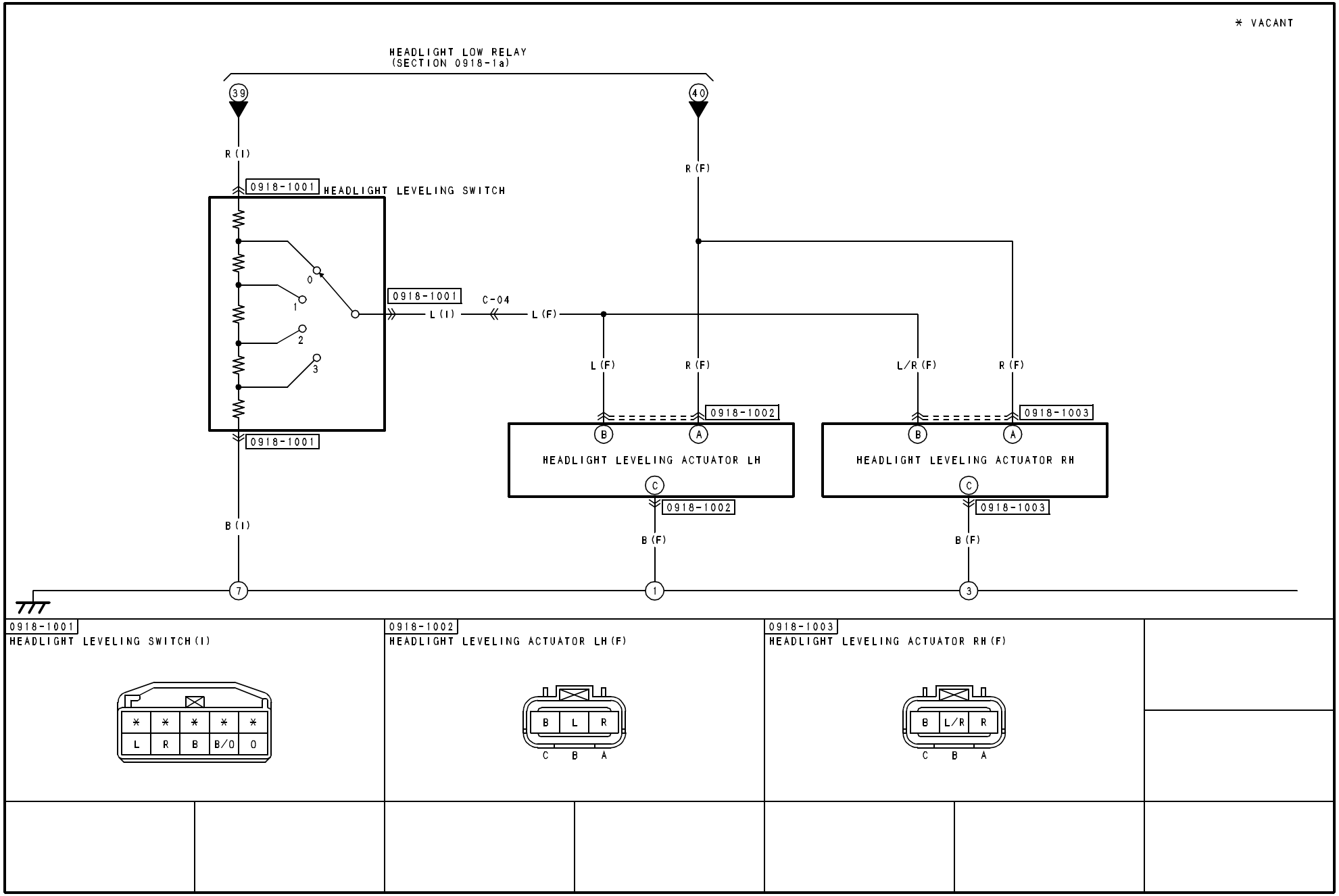
* VACANT
HEADLIGHT LOW RELAY
(SECTION 0918-1a)
39
40
R (I)
R (F)
0918-1001
HEADLIGHT LEVELING SWITCH
0
1
2
3
0918-1001
C-04
L (I)
L (F)
L (F)
R (F)
L/R (F)
R (F)
0918-1002
0918-1003
B
A
HEADLIGHT LEVELING ACTUATOR LH
HEADLIGHT LEVELING ACTUATOR RH
C
0918-1001
0918-1002
0918-1003
B (I)
B (F)
B (F)
7
1
3
0918-1001
HEADLIGHT LEVELING SWITCH (I)
* * * * *
L R B B/O O
0918-1002
HEADLIGHT LEVELING ACTUATOR LH (F)
B L R
C B A
0918-1003
HEADLIGHT LEVELING ACTUATOR RH (F)
B L/R R
C B A

HARNESS SYMBOL : (F) (E) (R)

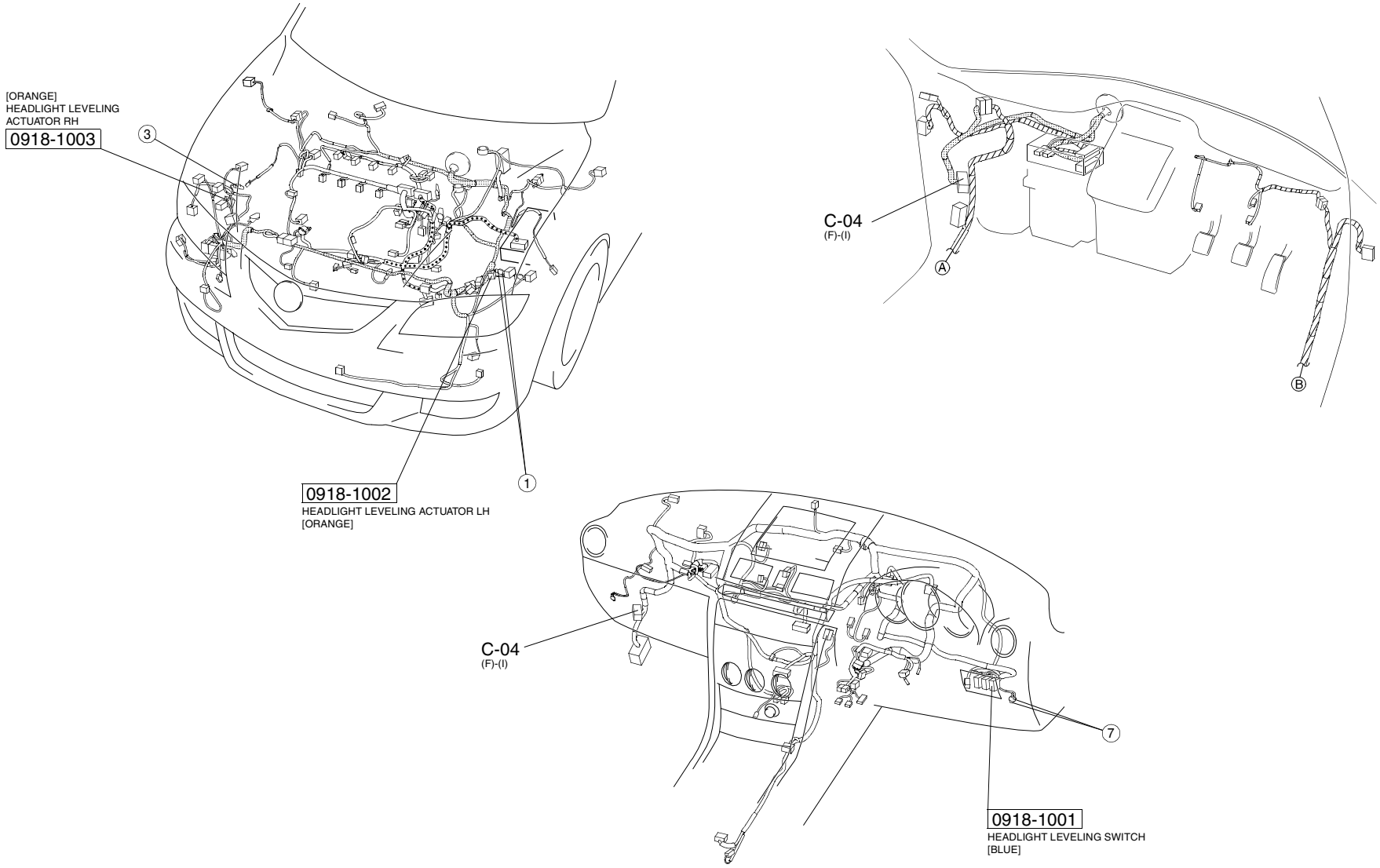

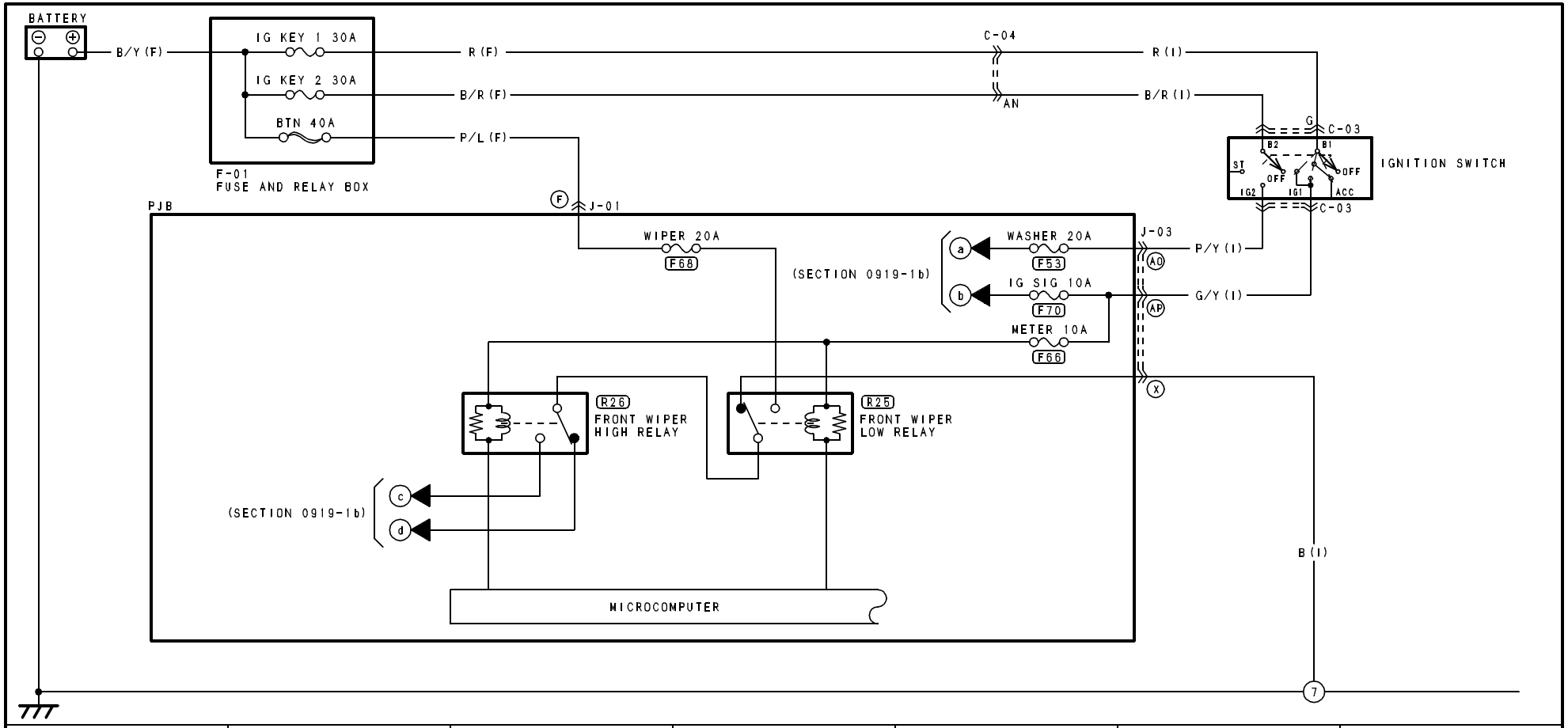
BATTERY
B/Y (F)
IG KEY 1 30A
IG KEY 2 30A
BTN 40A
F-01
FUSE AND RELAY BOX
R (F)
B/R (F)
P/L (F)
C-04
AN
R (I)
B/R (I)
G
C-03
B2
B1
ST
OFF
IG2
IG1
ACC
IGNITION SWITCH
F
J-01
PJB
WIPER 20A
F68
(SECTION 0919-1b)
WASHER 20A
F53
IG SIG 10A
F70
METER 10A
F66
J-03
A0
AP
X
P/Y (I)
G/Y (I)
R26
FRONT WIPER
HIGH RELAY
R25
FRONT WIPER
LOW RELAY
(SECTION 0919-1b)
B (I)
MICROCOMPUTER
7

HARNESS SYMBOL : (F) (E) (R)

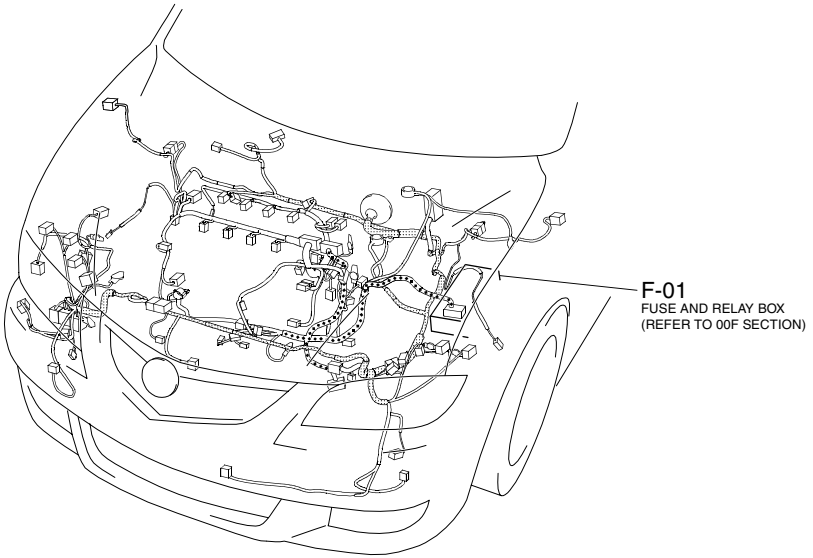

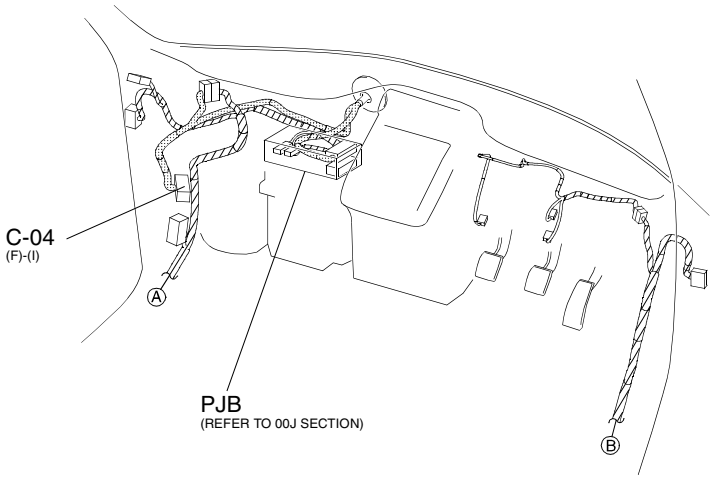

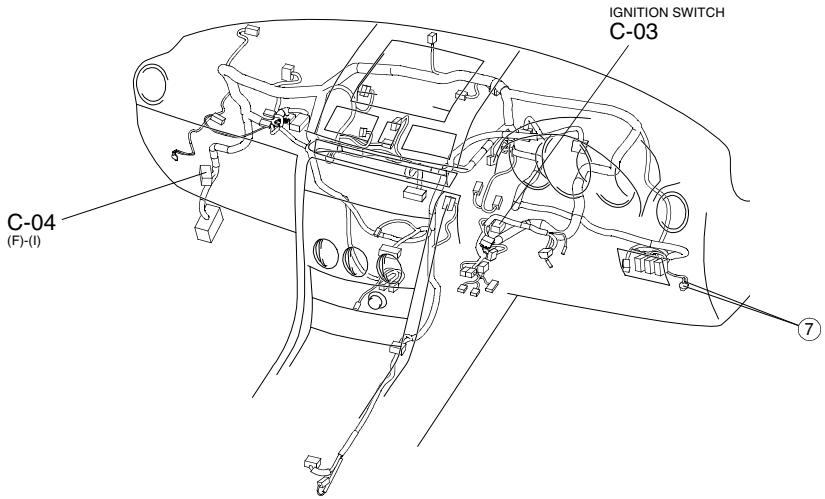

< > WIPER AND WASHER SWITCH LEFT SIDE
[ ] WITH AUTO WIPER * VACANT

PJB

MICROCOMPUTER

(SECTION 0919-1a)

J-01 J-05 J-06 J-03 J-04 J-03 J-01

G/B (R) BR/G (R) B/G (R) W/G (R) C-11

BR/G (IN) W/G (IN) G/B (IN) B/G (IN) 0919-104

RAIN SENSOR

WITH AUTO WIPER

W/G (F) W/B (F) B/O (F) B/R (I) W/R (I) B/G (I) B/R (I) W/G (I) G/O (I) Y/B (I) Y/B (F)

WINDSHIELD WIPER AND WASHER SWITCH

0919-101

WITH AUTO WIPER

INT [AUTO] OFF MIST

WASHER SWITCH

0919-103

WINDSHIELD WASHER MOTOR

0919-102

LO HI

AUTOSTOP SWITCH

WINDSHIELD WIPER MOTOR

L <B> B/W (I) B/Y (I) B/L (I) B (I) B (F) B (F) B/O (F)

0919-101
WINDSHIELD WIPER AND WASHER SWITCH (I)

*	B/G	W/G	B/R	G/O	Y/B
B/W	B/W	W/V	B/L	W/R	B

L J

(WIPER AND WASHER SWITCH RIGHT SIDE)

Y/B	G/O	B/R	W/G	B/G	*
B	W/R	B/L	W/V	B/W	B/W

D B

(WIPER AND WASHER SWITCH LEFT SIDE)

0919-102
WINDSHIELD WIPER MOTOR (F)

B	B/O	W/G	W/B

0919-103
WINDSHIELD WASHER MOTOR (F)

B	Y/B

0919-104
RAIN SENSOR (IN)

G/B	A
B/G	B
W/G	C
BR/G	D

(WITH AUTO WIPER)

HARNESS SYMBOL : (F) (E) (R)

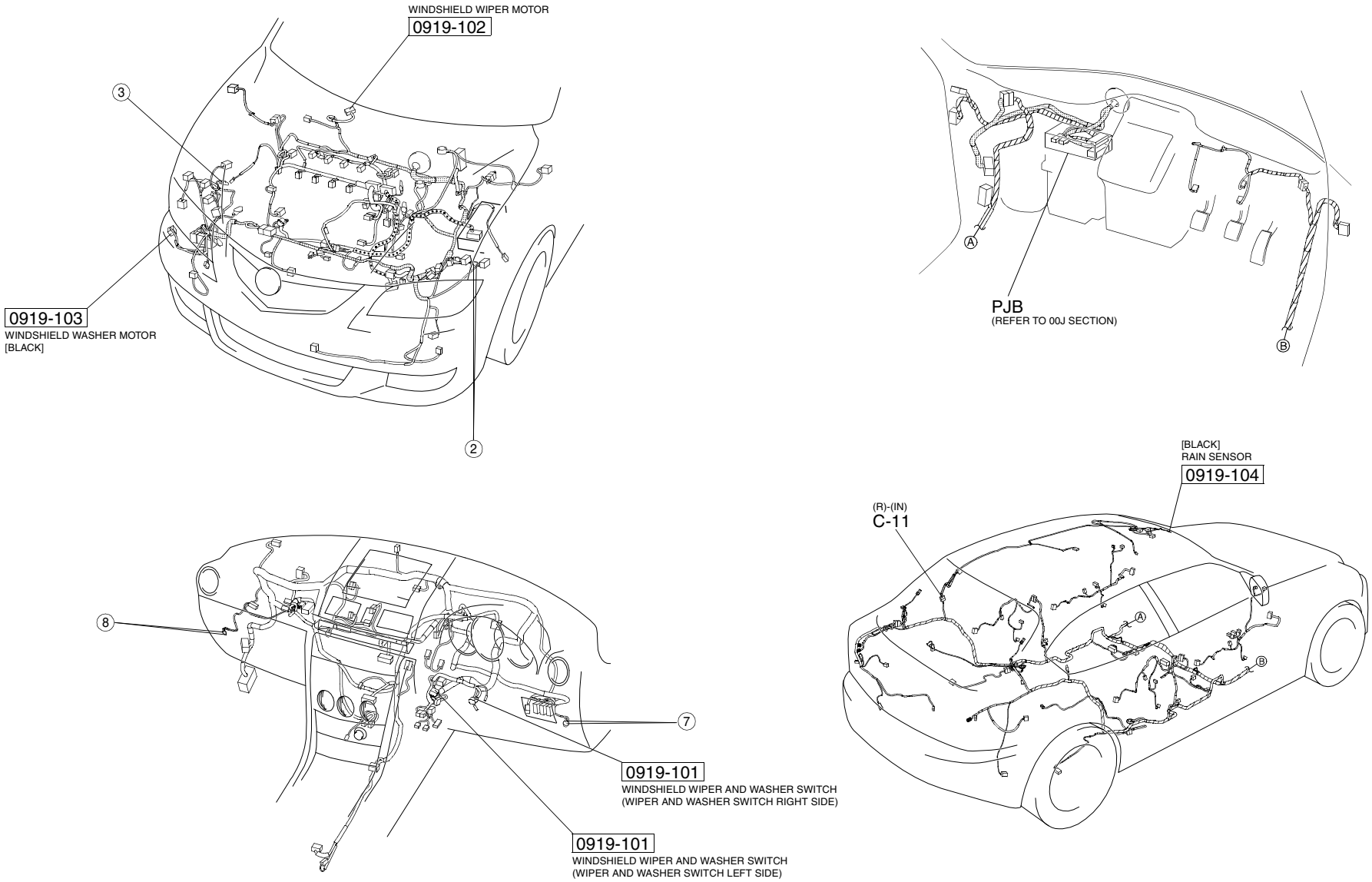

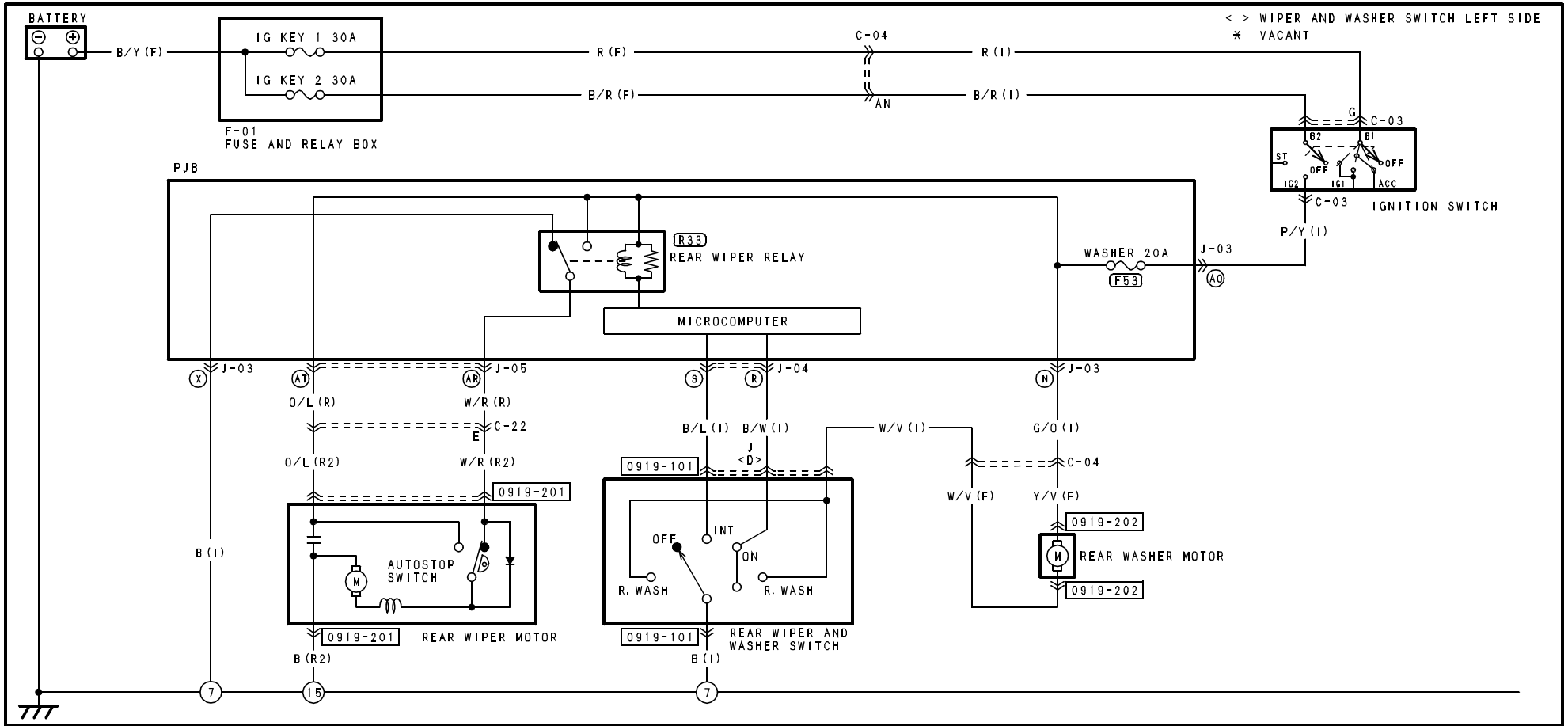

0919-201
REAR WIPER MOTOR (R2)

0919-202
REAR WASHER MOTOR (F)

0919-101
REAR WIPER AND WASHER SWITCH (I)

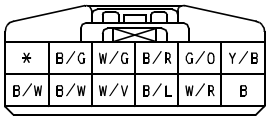

(WIPER AND WASHER SWITCH RIGHT SIDE)

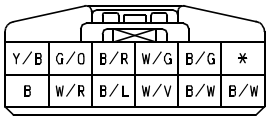

(WIPER AND WASHER SWITCH LEFT SIDE)

HARNESS SYMBOL : (F) (E) (R)

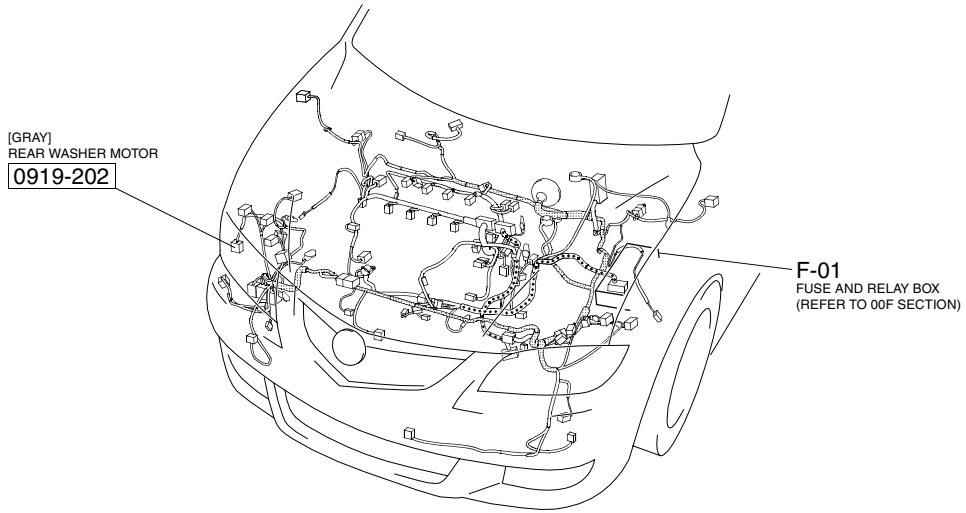

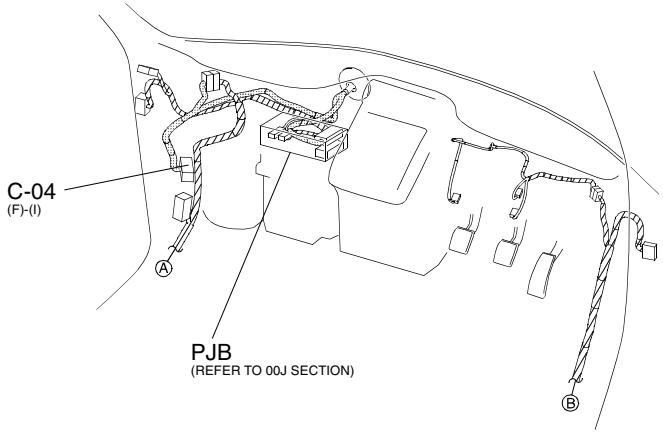

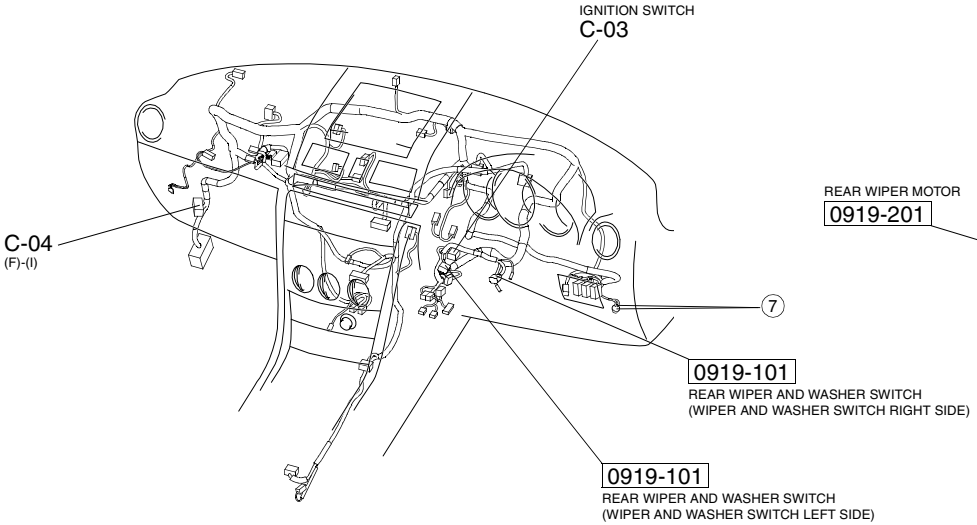

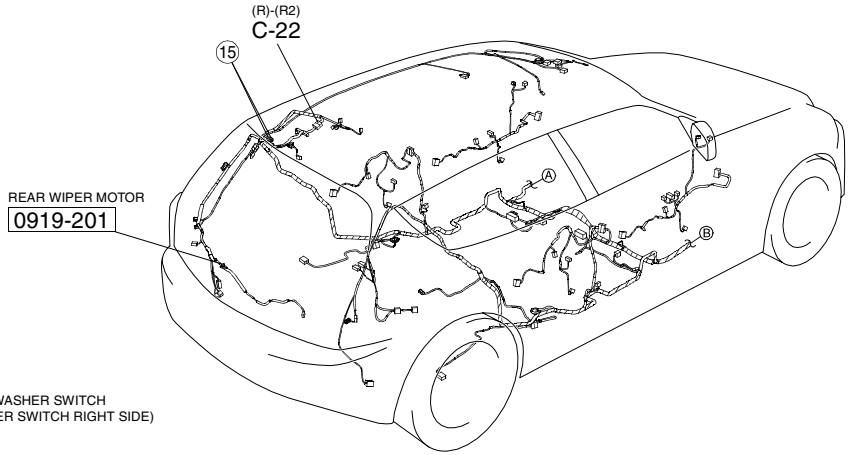

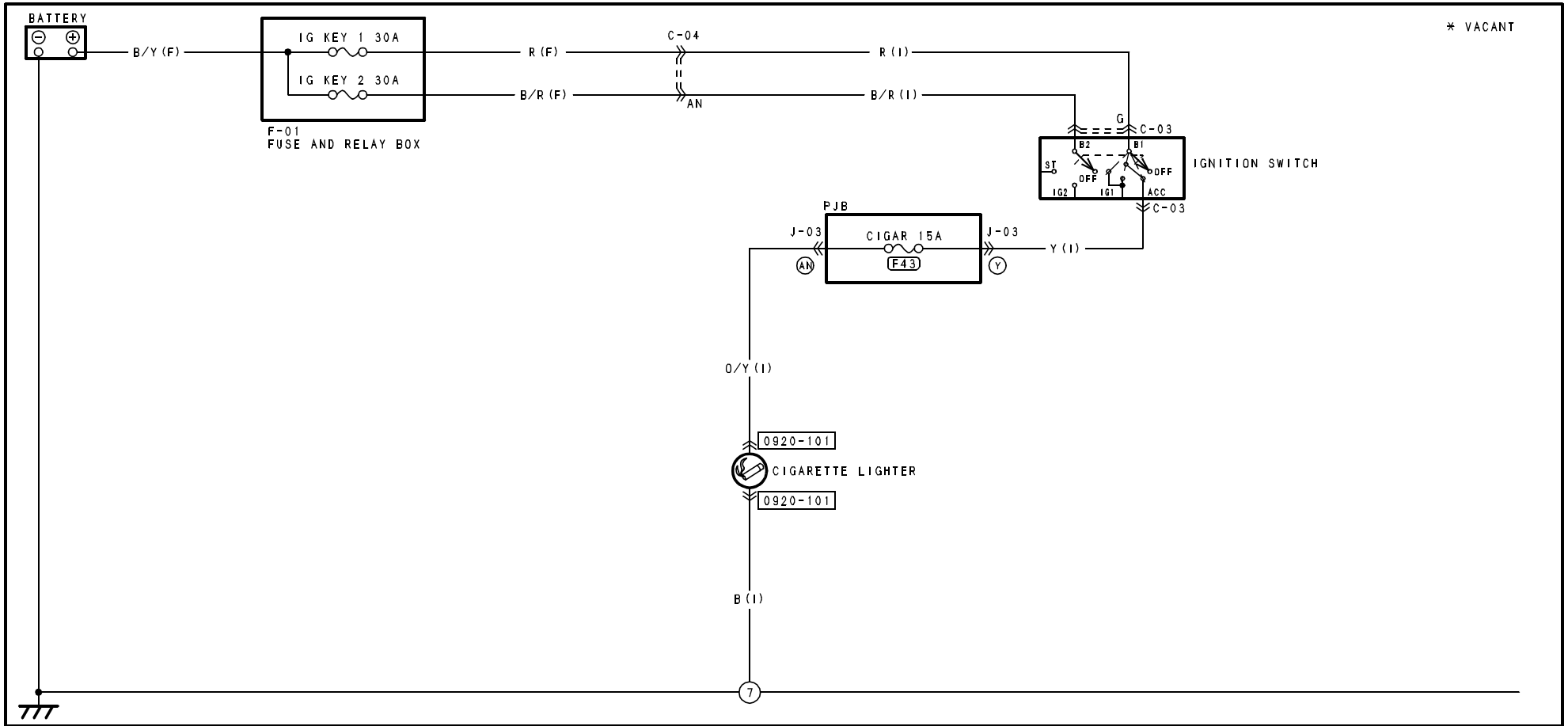

0920-101
CIGARETTE LIGHTER (I)

HARNESS SYMBOL : (F) (E) (R)

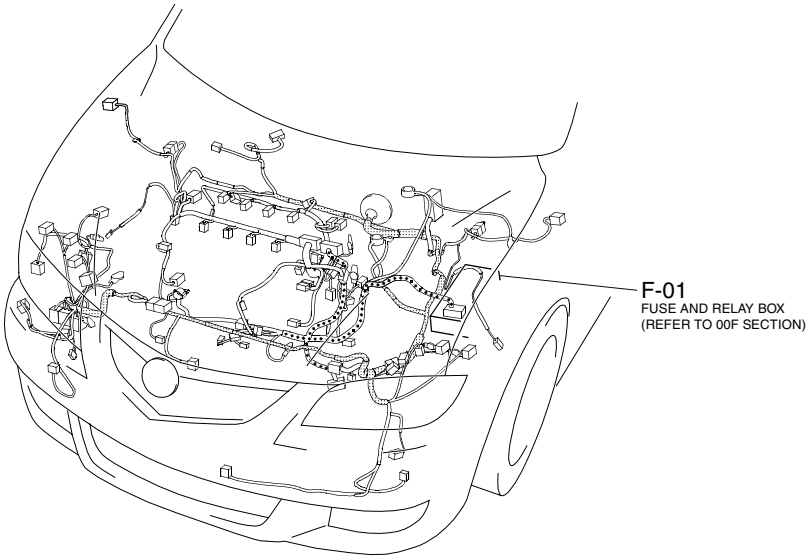

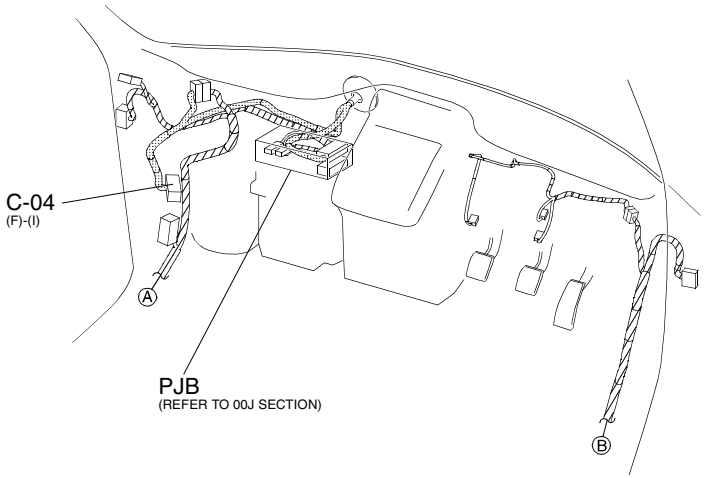

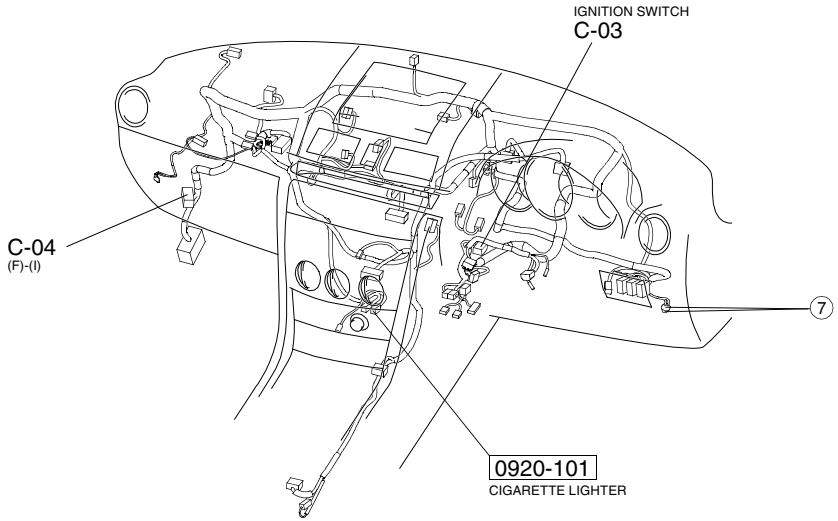

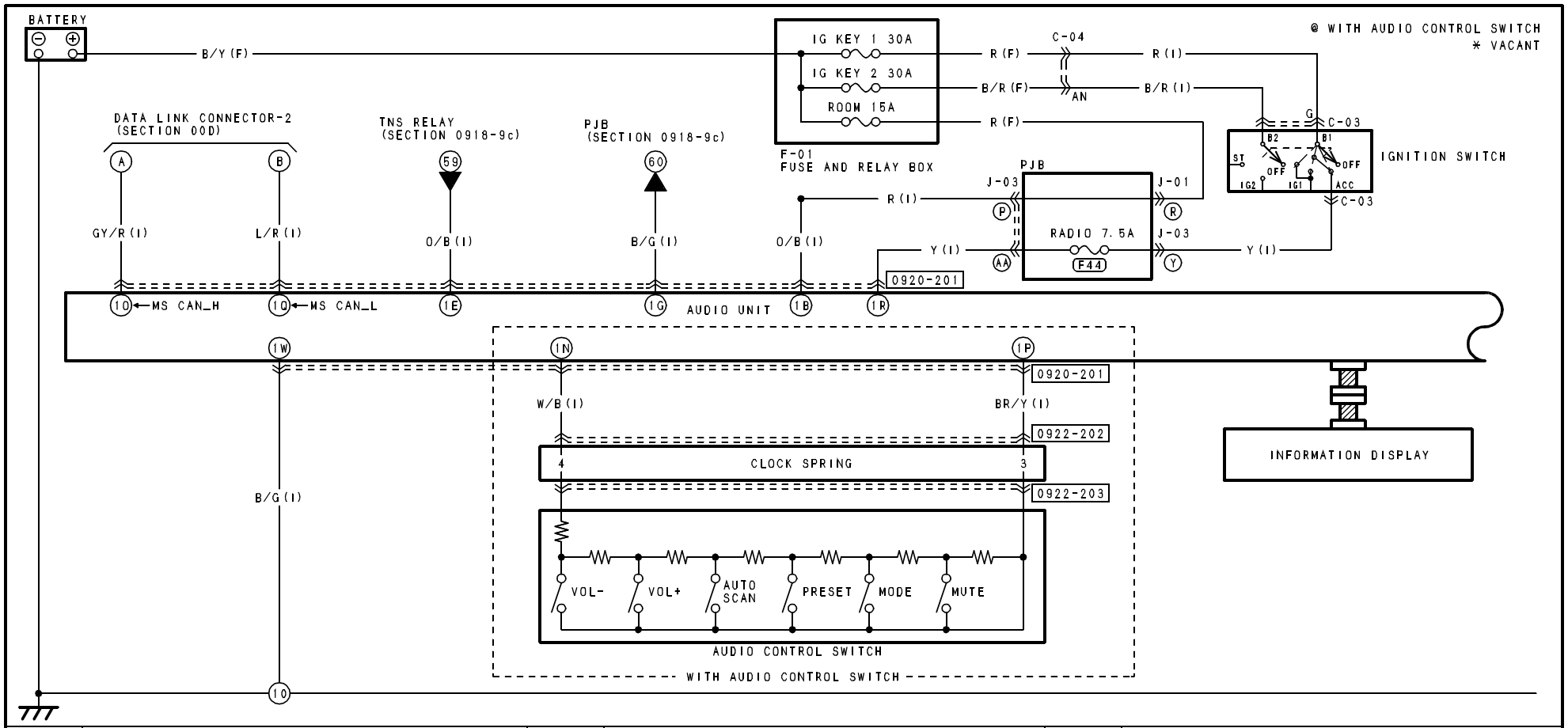

0920-201
AUDIO UNIT (I)

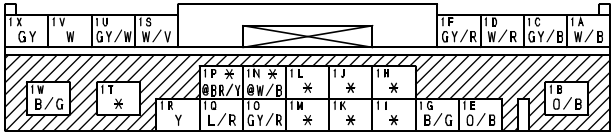

0922-202
INSTRUMENT PANEL (I)-CLOCK SPRING

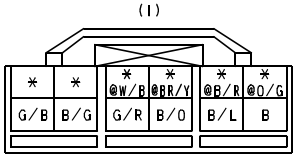

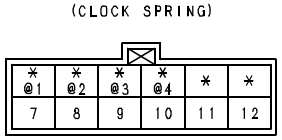

TERMINALS OF THIS CONNECTOR ARE INDICATED BY NUMBERS.

0922-203
AUDIO CONTROL SWITCH
(CLOCK SPRING)

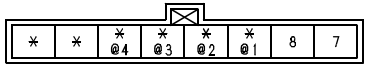

TERMINALS OF THIS CONNECTOR ARE INDICATED BY NUMBERS.

HARNESS SYMBOL : (F) (E) (R)

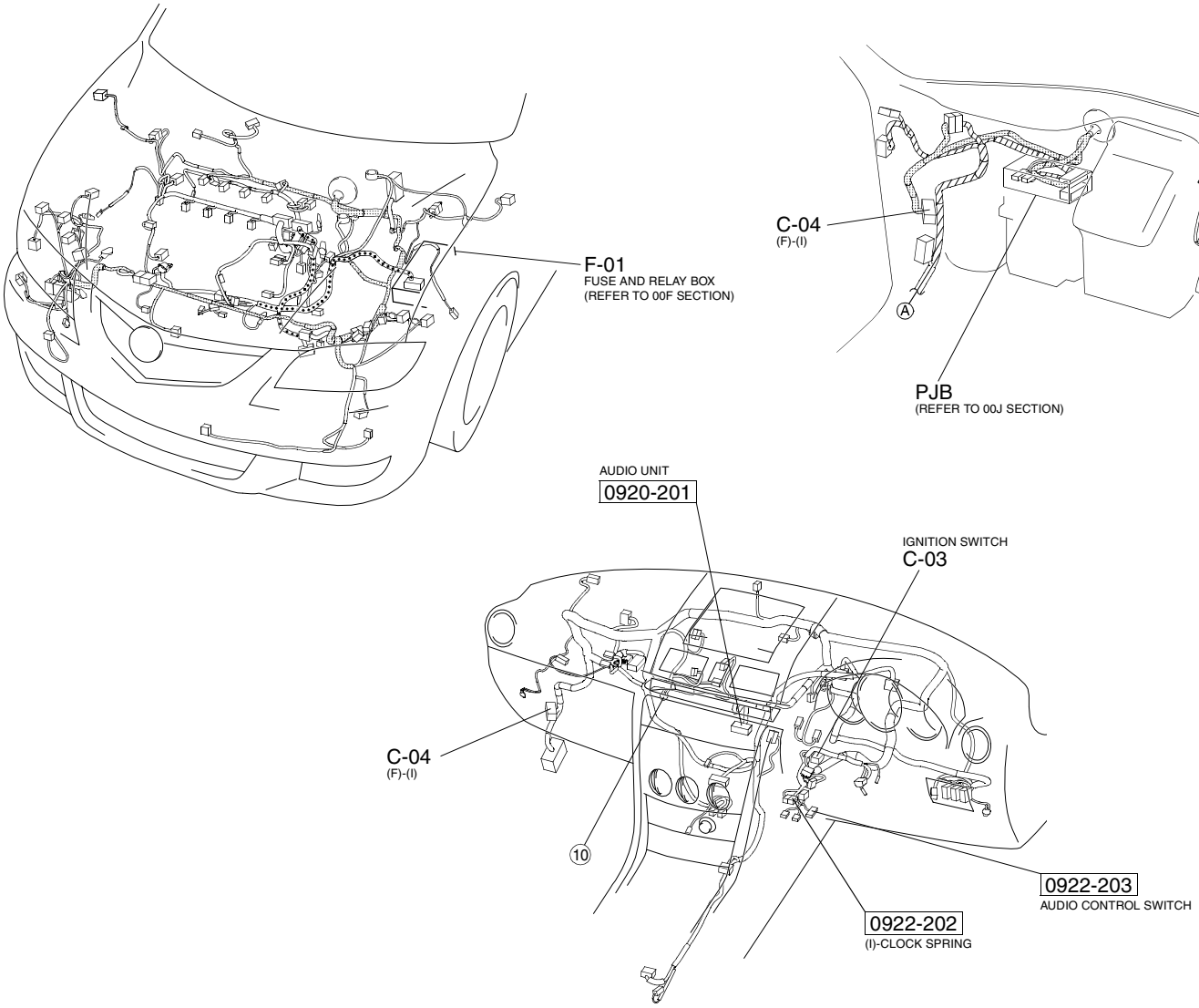

@ WITH AUDIO CONTROL SWITCH
* VACANT

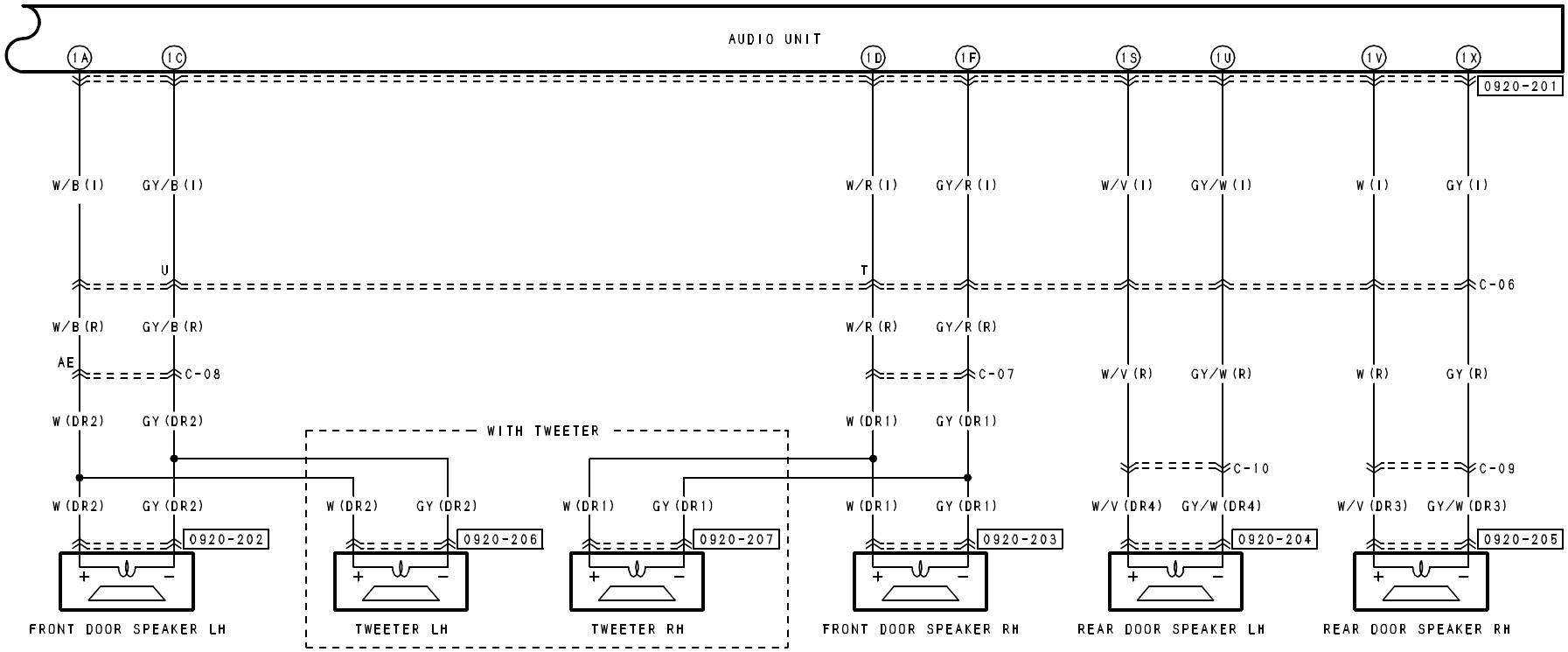

0920-201
AUDIO UNIT (I)

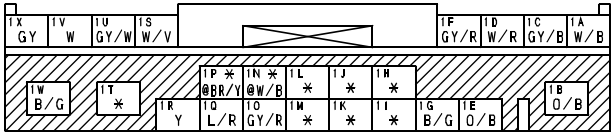

0920-202
FRONT DOOR SPEAKER LH (DR2)

0920-203
FRONT DOOR SPEAKER RH (DR1)

0920-204
REAR DOOR SPEAKER LH (DR4)

0920-205
REAR DOOR SPEAKER RH (DR3)

0920-206
TWEETER LH (DR2)

(WITH TWEETER)

0920-207
TWEETER RH (DR1)

(WITH TWEETER)

HARNESS SYMBOL : (F) (E) (R)

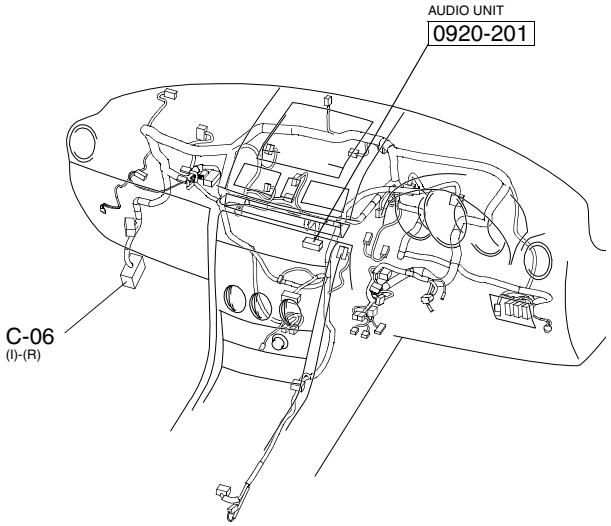

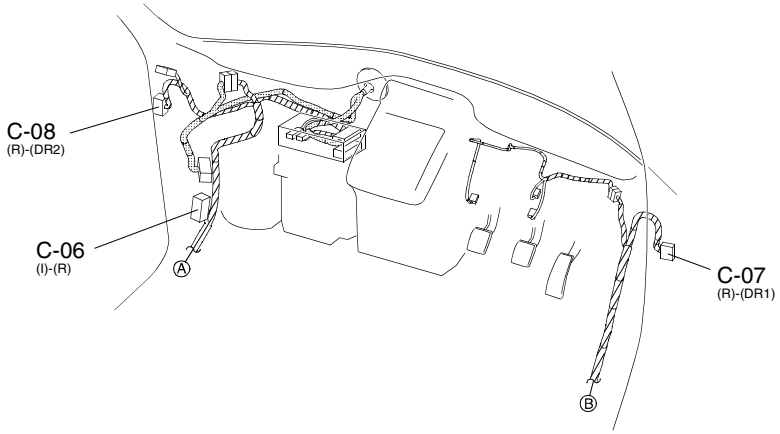

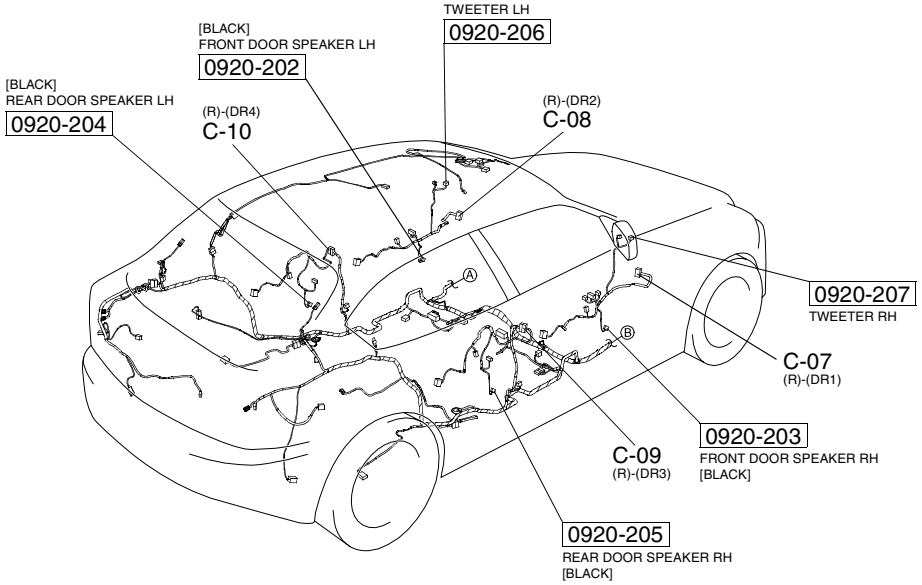

AUDIO SYSTEM (BOSE TYPE AUDIO)

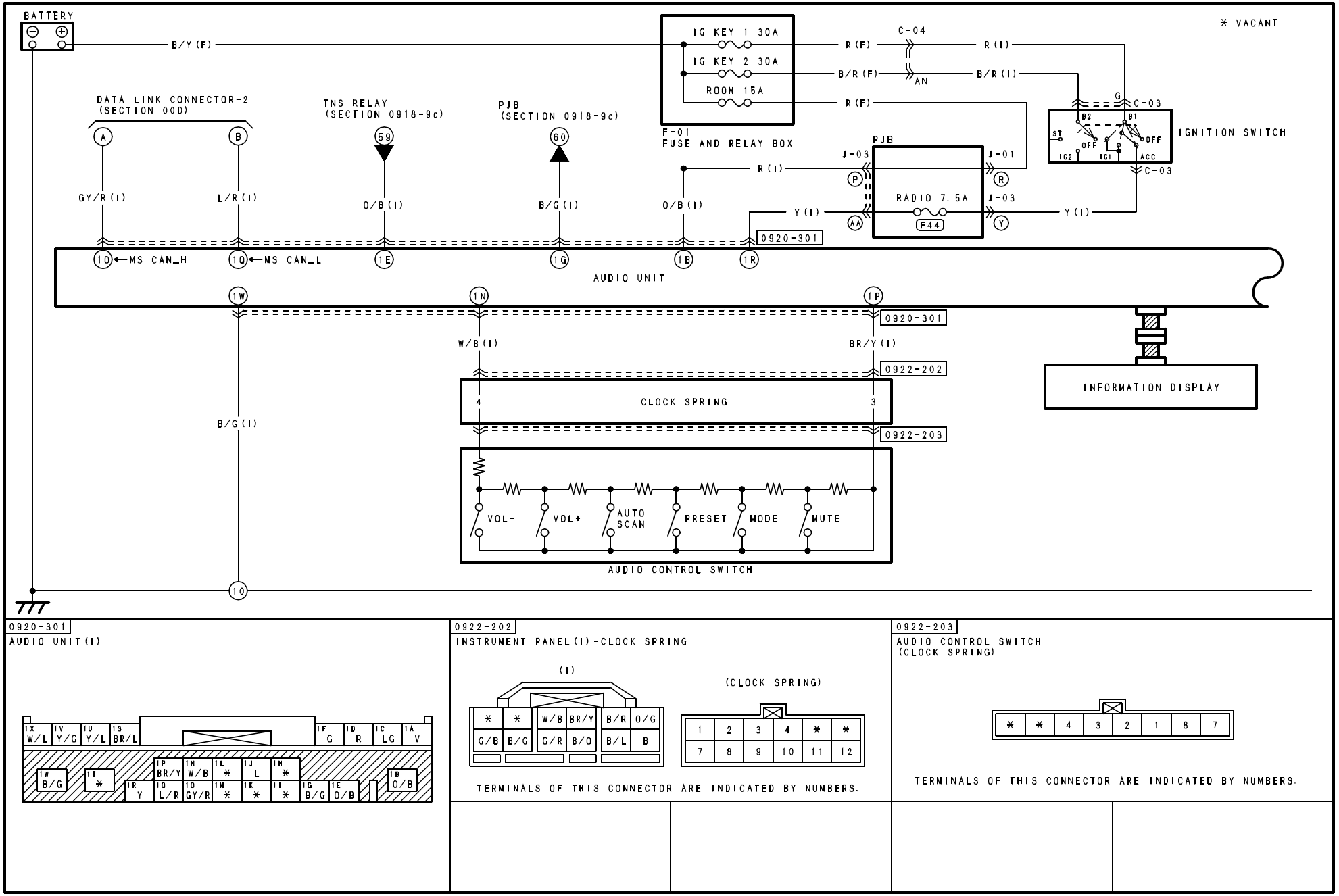

0920-301
AUDIO UNIT (I)

0922-202
INSTRUMENT PANEL (I)-CLOCK SPRING

TERMINALS OF THIS CONNECTOR ARE INDICATED BY NUMBERS.

0922-203
AUDIO CONTROL SWITCH
(CLOCK SPRING)

TERMINALS OF THIS CONNECTOR ARE INDICATED BY NUMBERS.

HARNESS SYMBOL : (F) (E) (R)

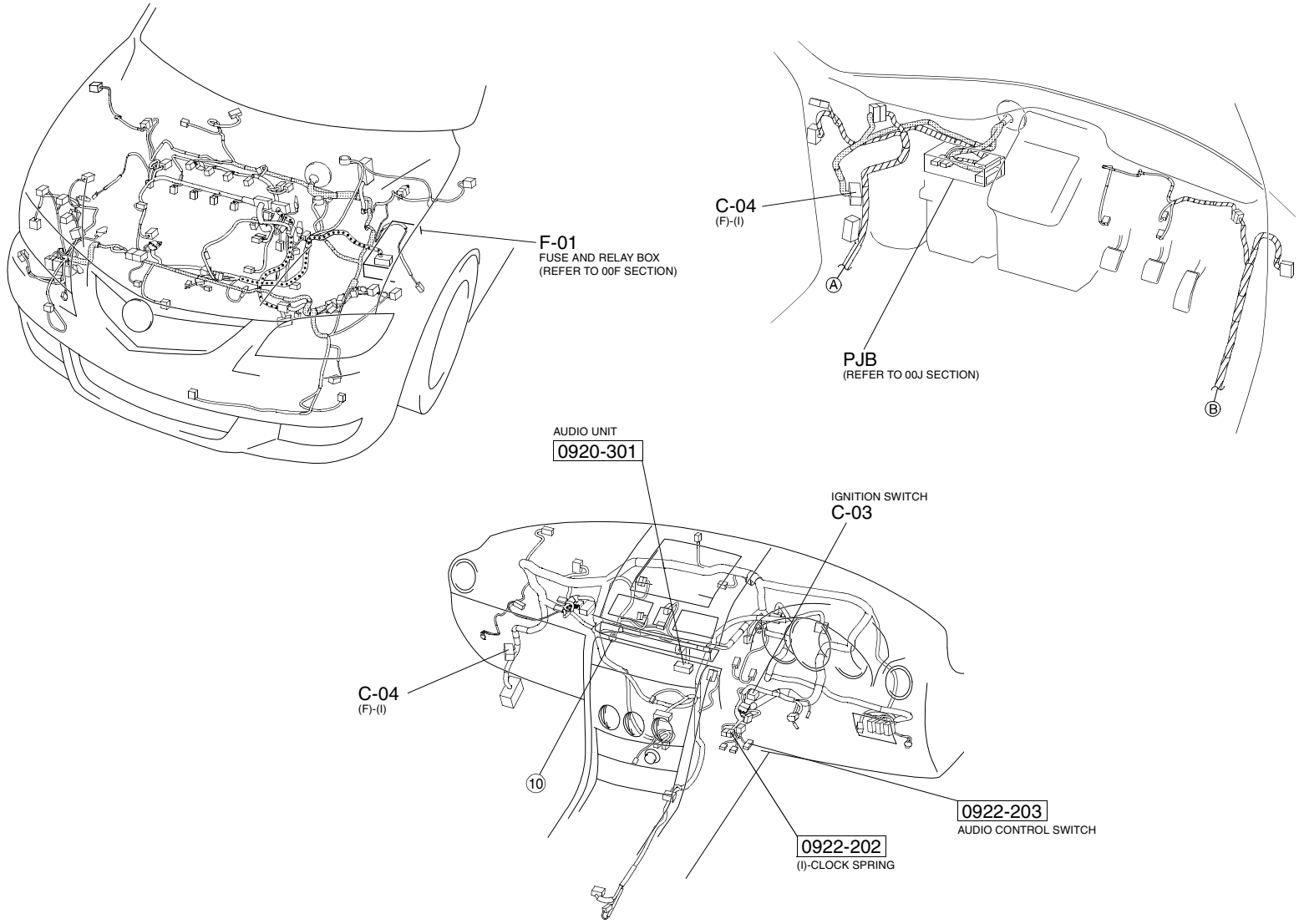

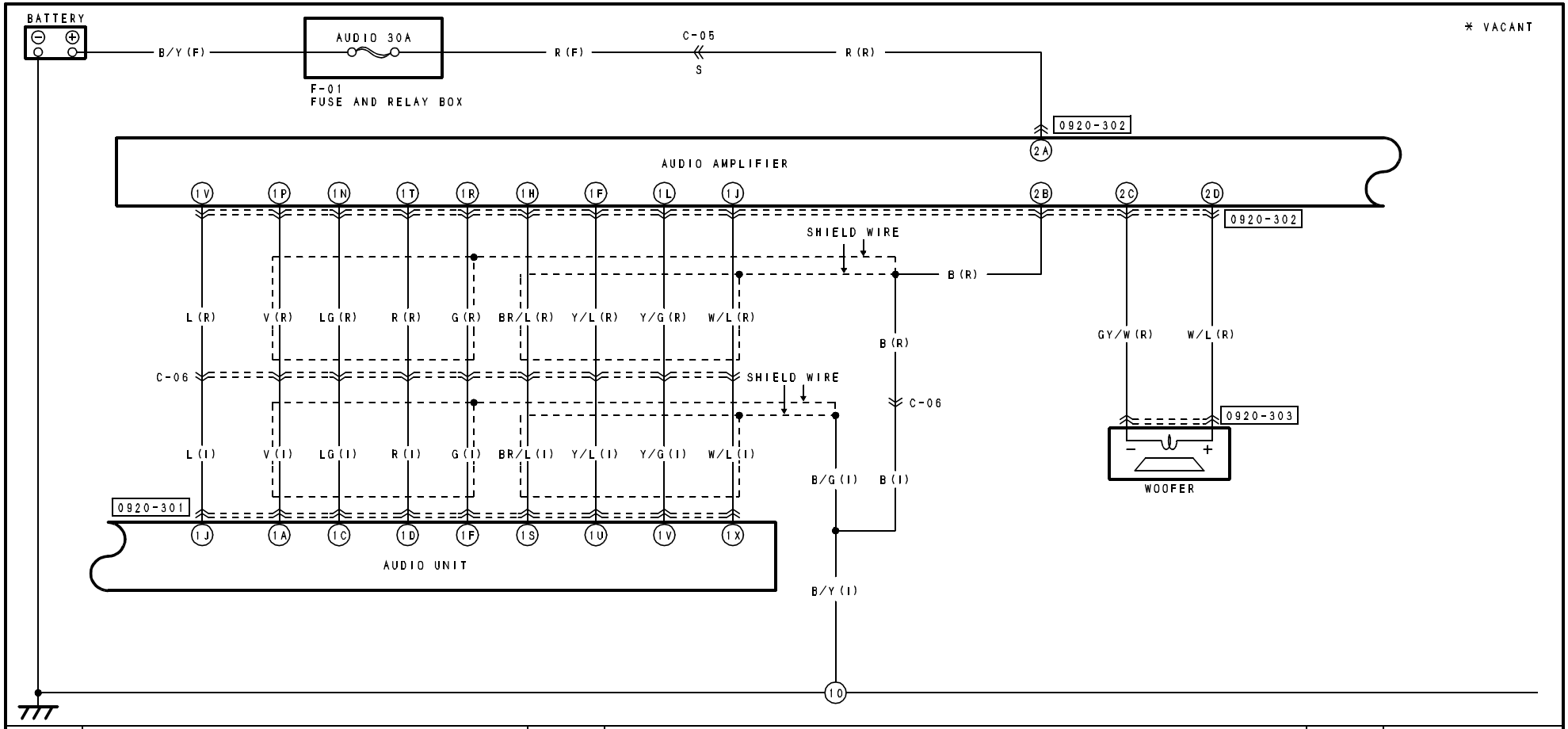

0920-301
AUDIO UNIT (I)

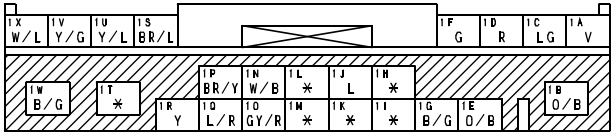

0920-302
AUDIO AMPLIFIER (R)

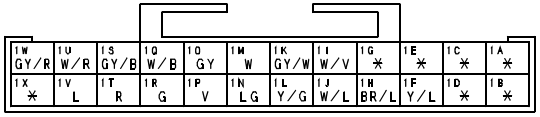

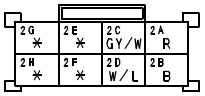

0920-303
WOOFER (R)

HARNESS SYMBOL : (F) (E) (R)

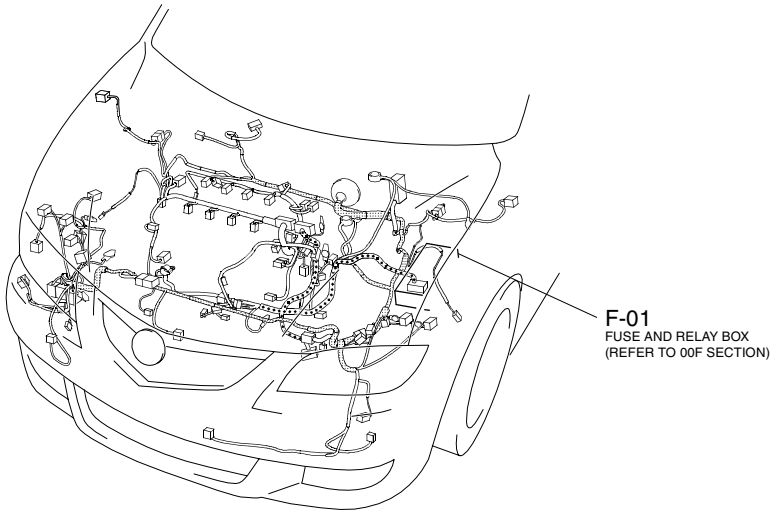

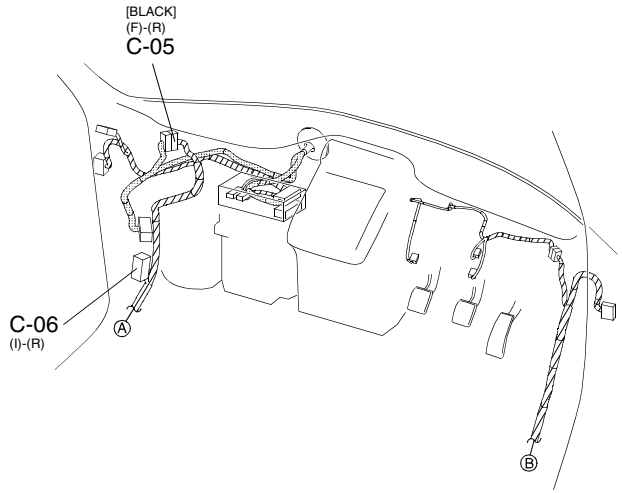

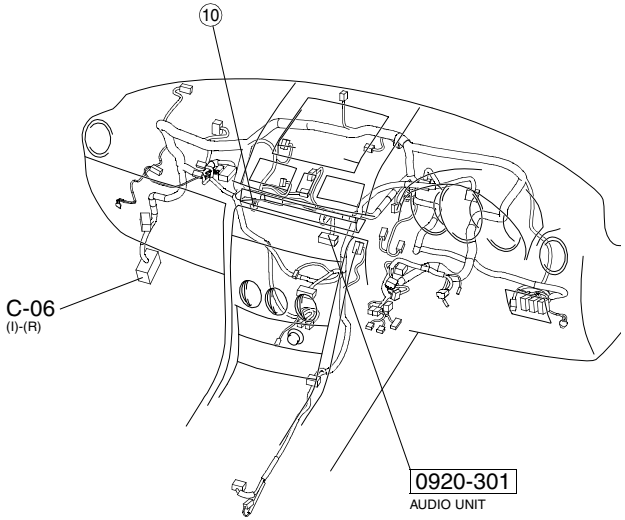

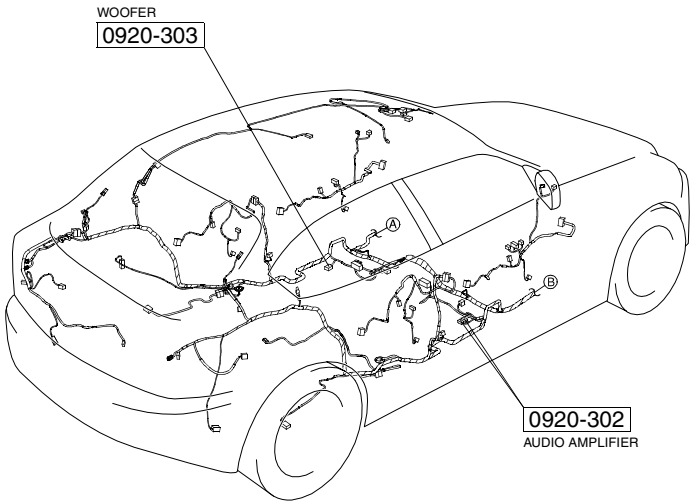

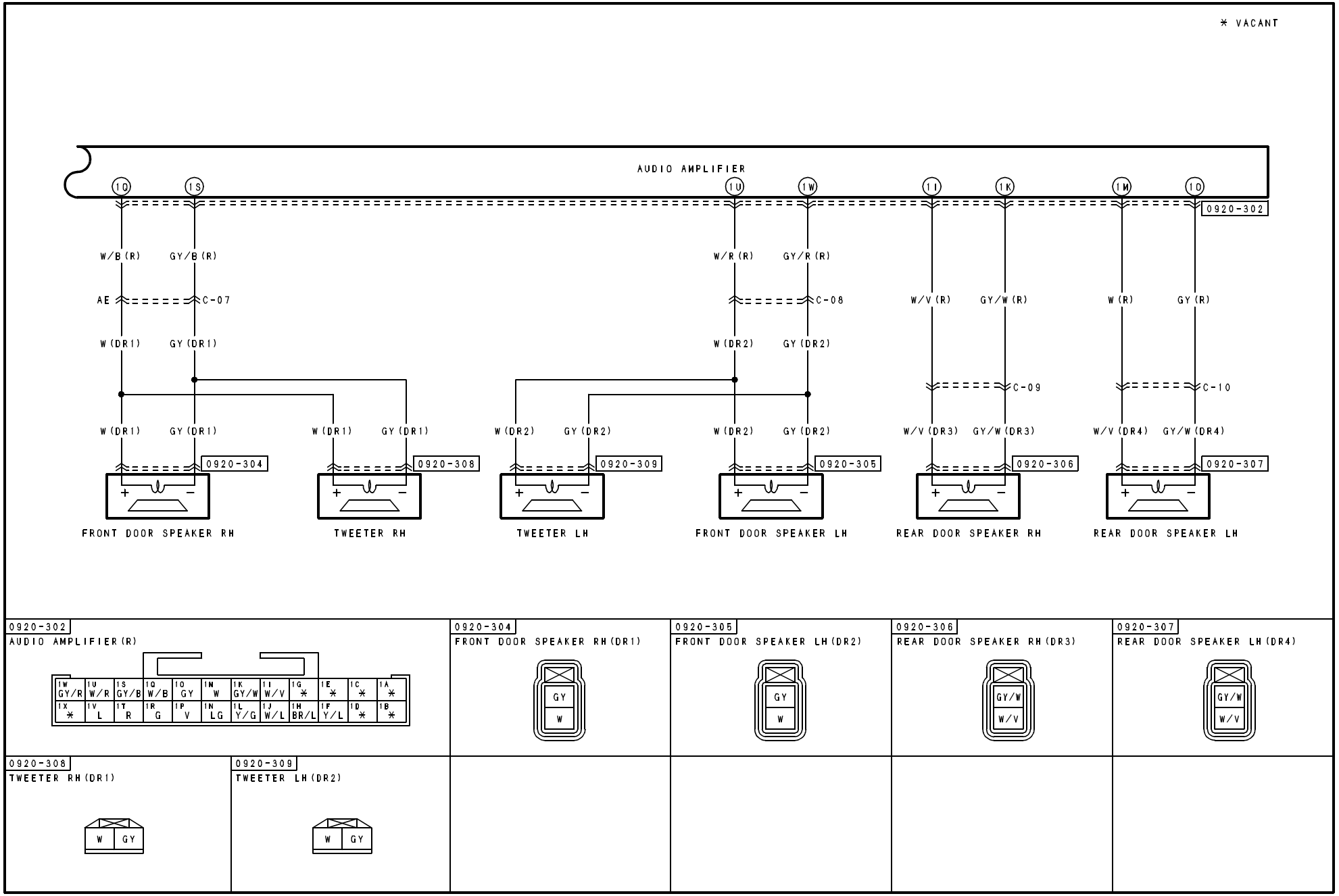
* VACANT
AUDIO AMPLIFIER
1Q
1S
1U
1W
1I
1K
1M
1O
0920-302
W/B (R)
GY/B (R)
W/R (R)
GY/R (R)
AE
C-07
C-08
W/V (R)
GY/W (R)
W (R)
GY (R)
W (DR1)
GY (DR1)
W (DR2)
GY (DR2)
C-09
C-10
W (DR1)
GY (DR1)
W (DR1)
GY (DR1)
W (DR2)
GY (DR2)
W (DR2)
GY (DR2)
W/V (DR3)
GY/W (DR3)
W/V (DR4)
GY/W (DR4)
0920-304
0920-308
0920-309
0920-305
0920-306
0920-307
FRONT DOOR SPEAKER RH
TWEETER RH
TWEETER LH
FRONT DOOR SPEAKER LH
REAR DOOR SPEAKER RH
REAR DOOR SPEAKER LH
0920-302
AUDIO AMPLIFIER (R)
1W GY/R
1U W/R
1S GY/B
1Q W/B
1O GY
1N W
1K GY/W
1I W/V
1G *
1E *
1C *
1A *
1X *
1V L
1T R
1R G
1P V
1N LG
1L Y/G
1J W/L
1H BR/L
1F Y/L
1D *
1B *
0920-304
FRONT DOOR SPEAKER RH (DR1)
GY
W
0920-305
FRONT DOOR SPEAKER LH (DR2)
GY
W
0920-306
REAR DOOR SPEAKER RH (DR3)
GY/W
W/V
0920-307
REAR DOOR SPEAKER LH (DR4)
GY/W
W/V
0920-308
TWEETER RH (DR1)
W
GY
0920-309
TWEETER LH (DR2)
W
GY

HARNESS SYMBOL : (F) (E) (R)

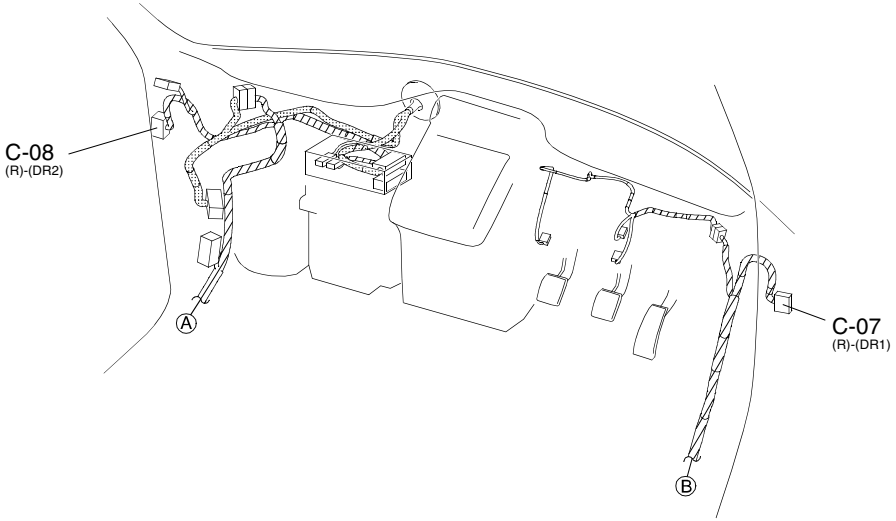

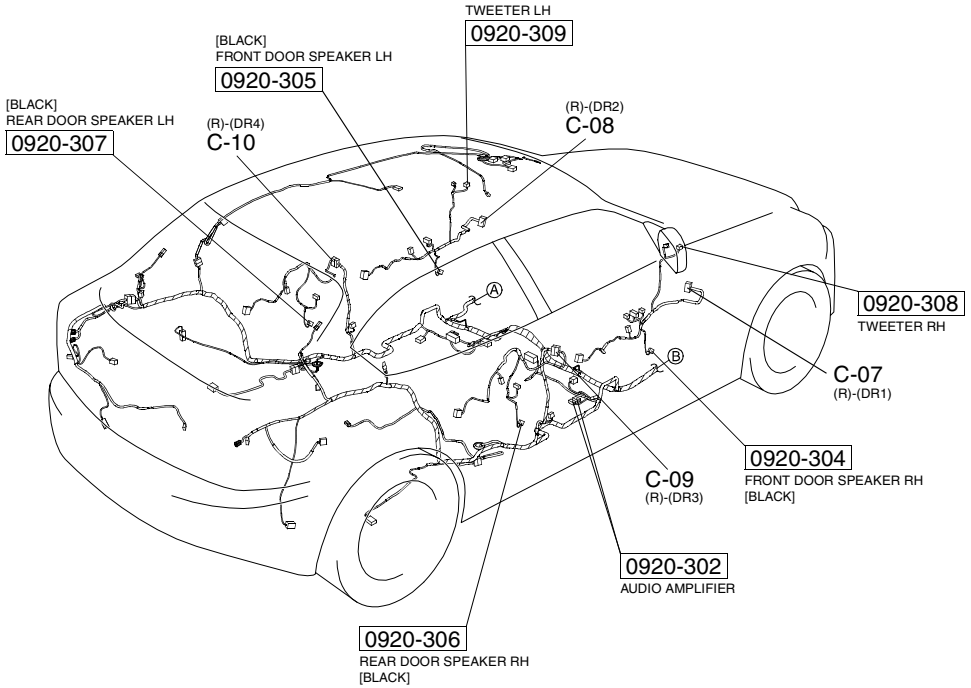

0922-1a

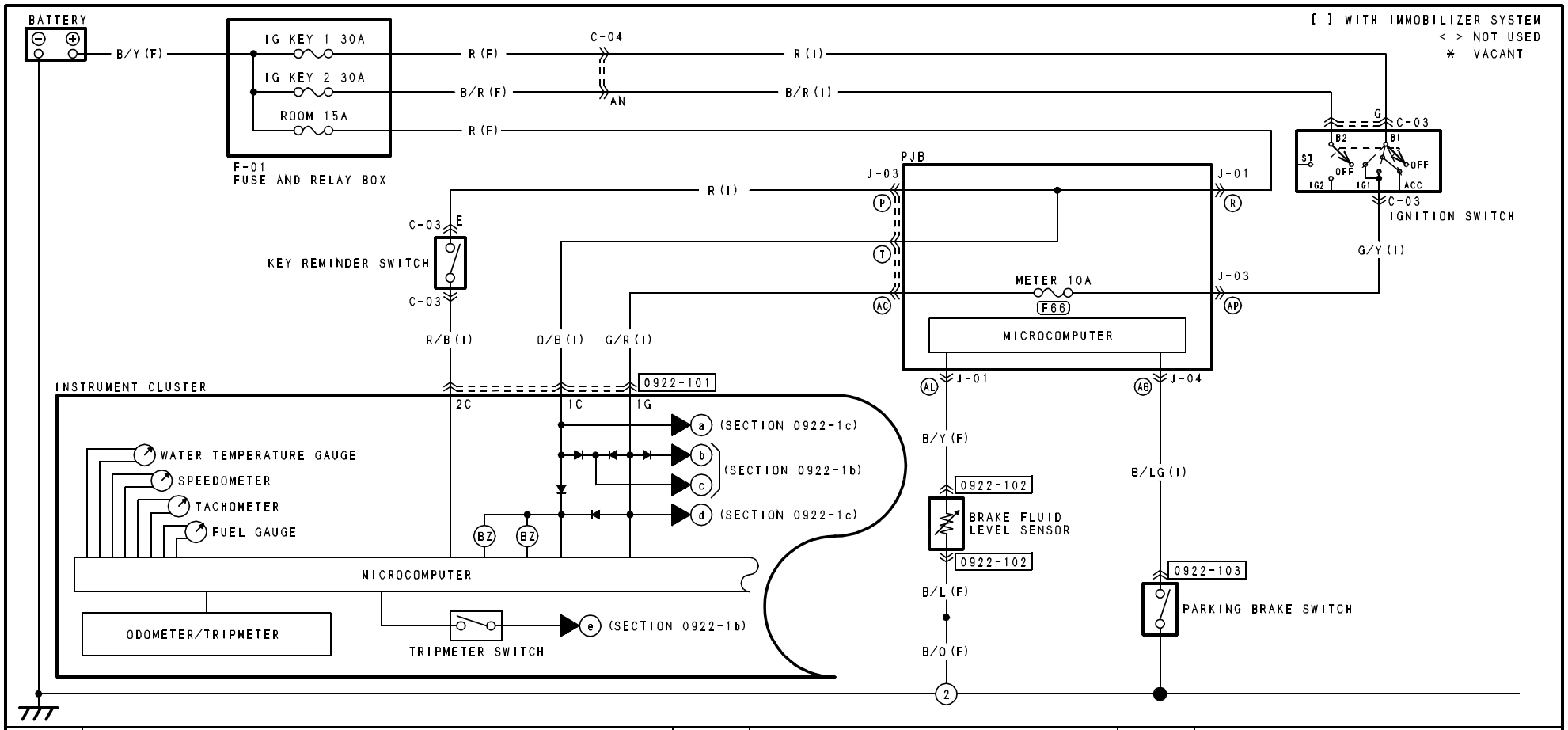

0922-101
INSTRUMENT CLUSTER (I)

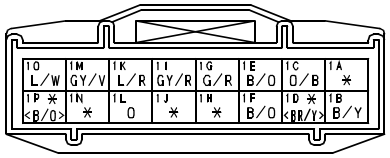

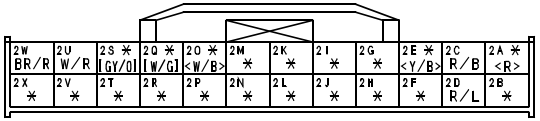

0922-102
BRAKE FLUID LEVEL SENSOR (F)

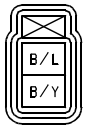

0922-103
PARKING BRAKE SWITCH (I)

HARNESS SYMBOL : (F) (E) (R)

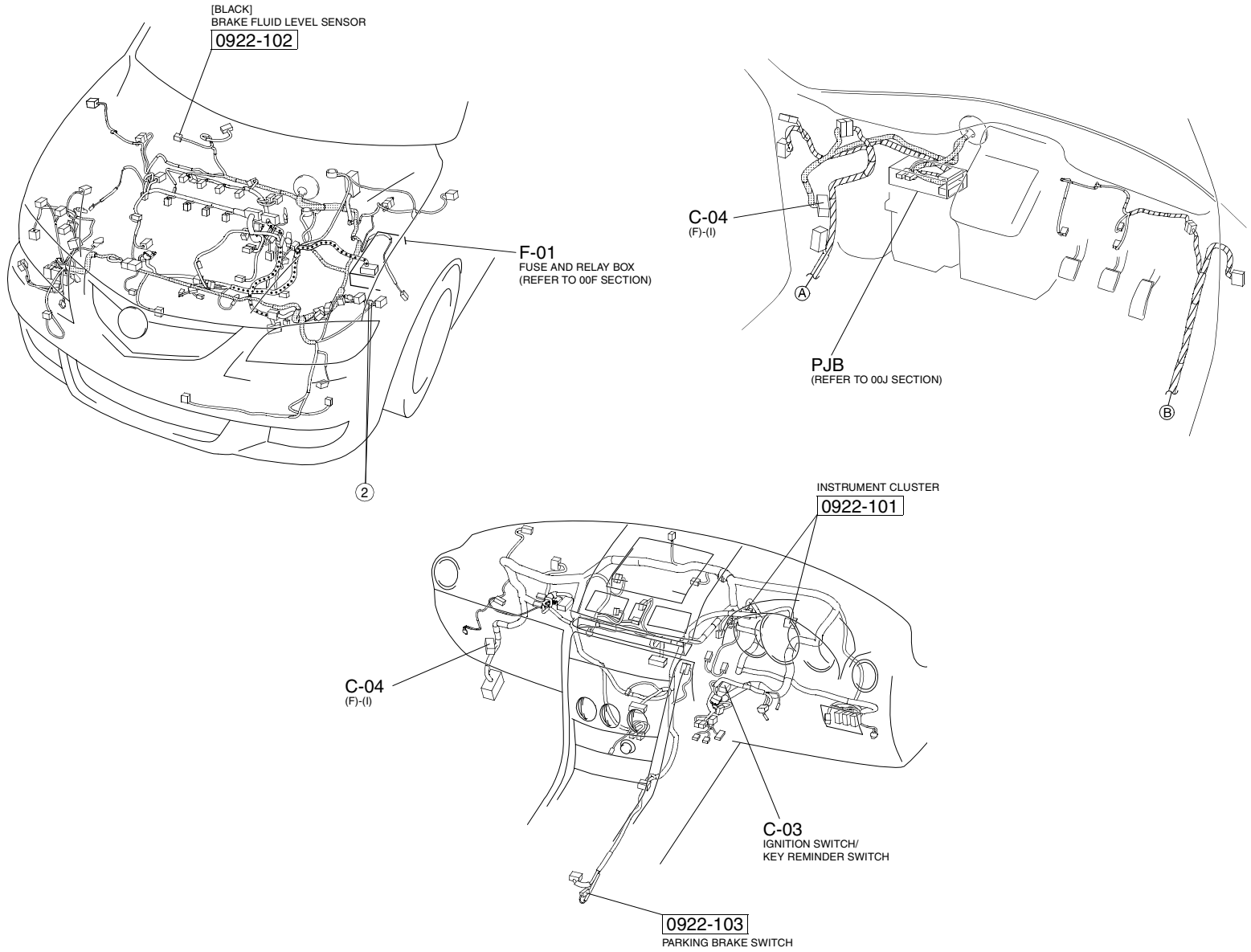

0922-1b

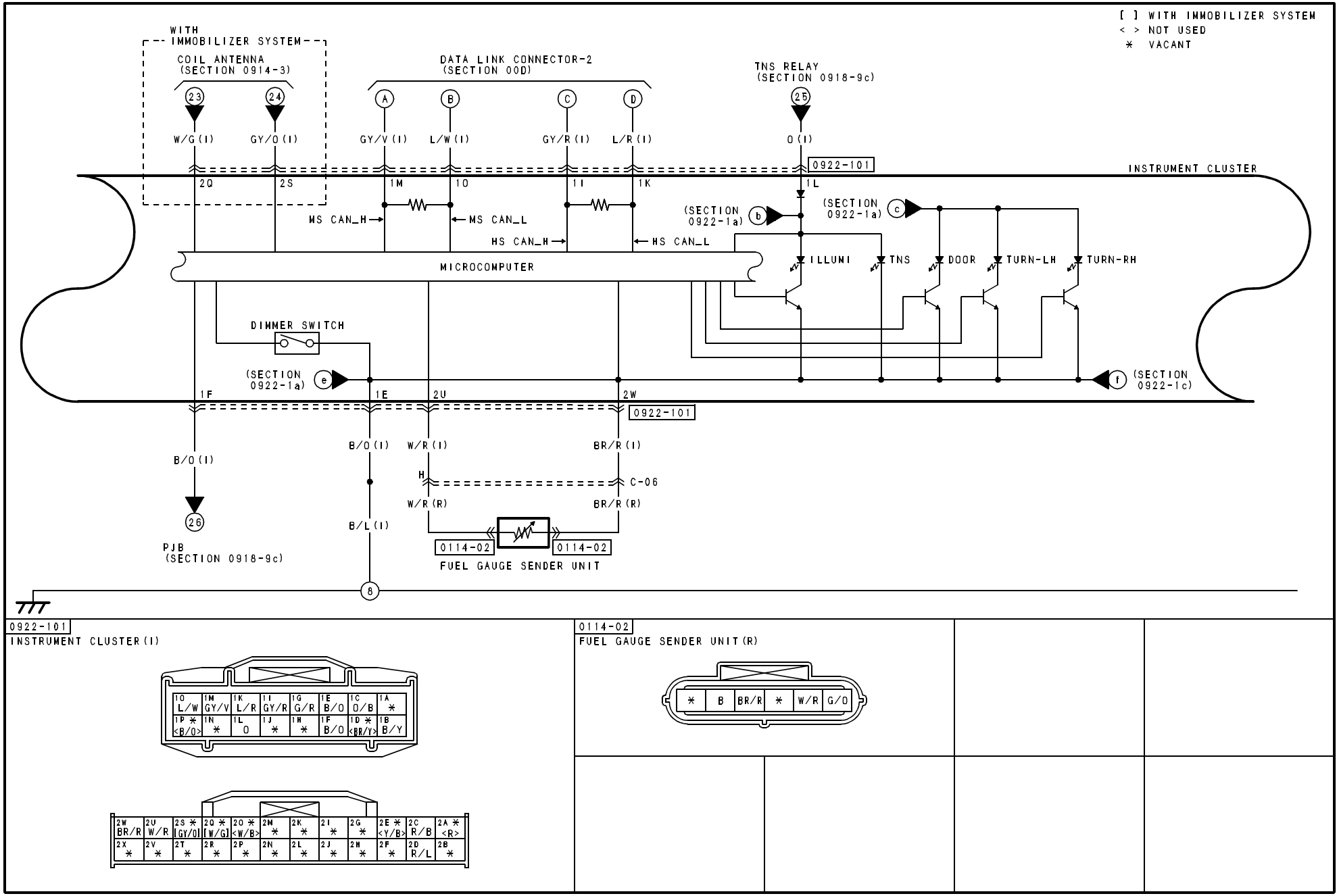

0922-101
INSTRUMENT CLUSTER (I)

0114-02
FUEL GAUGE SENDER UNIT (R)

HARNESS SYMBOL : (F) (E) (R)

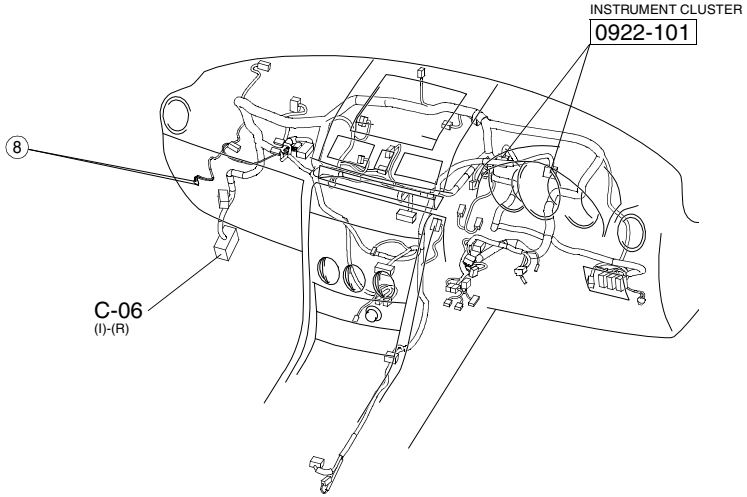

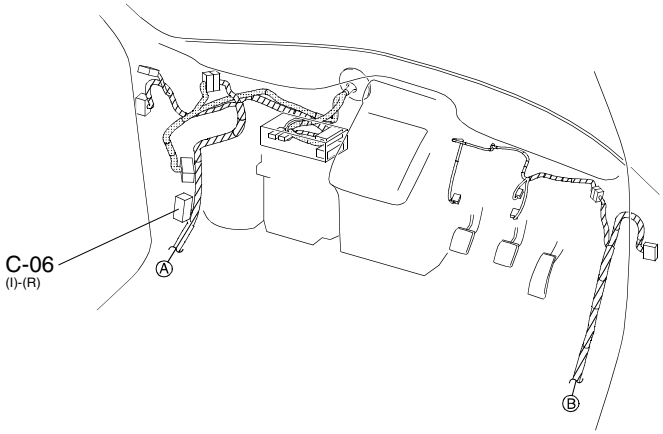

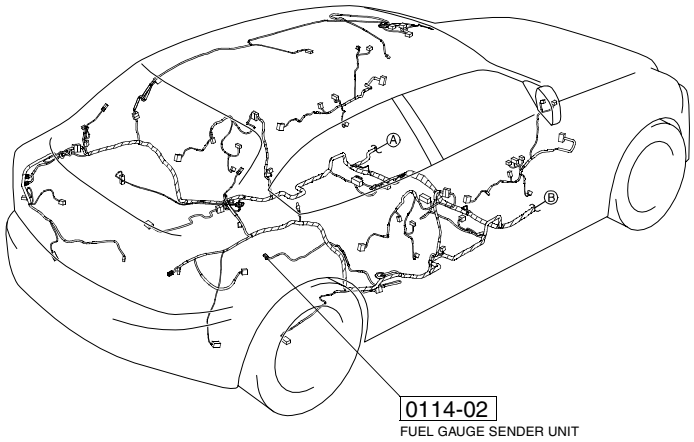

[ ] WITH IMMOBILIZER SYSTEM
< > NOT USED
* VACANT

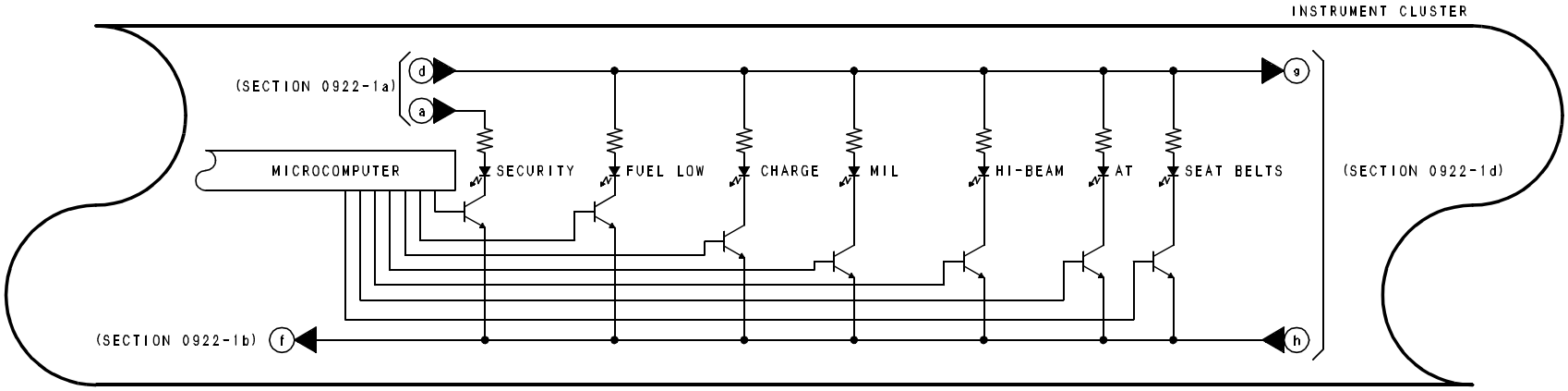

0922-101

INSTRUMENT CLUSTER (I)

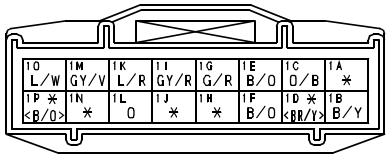

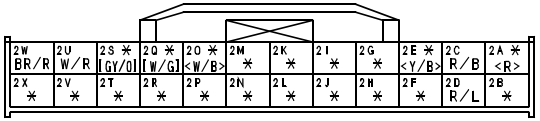

HARNESS SYMBOL : (F) (E) (R)

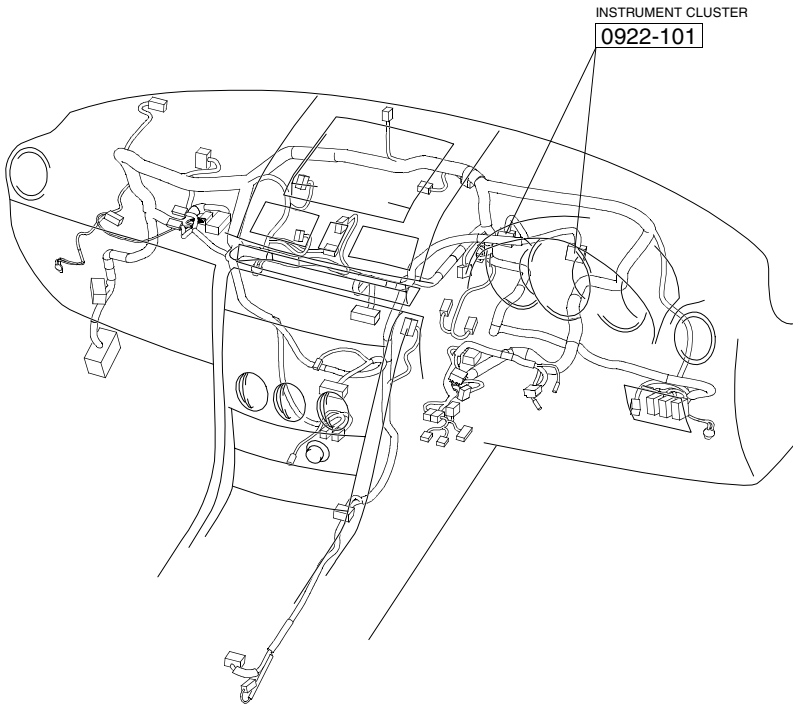

[ ] WITH IMMOBILIZER SYSTEM
< > NOT USED
* VACANT

FRONT FOG LIGHT RELAY (SECTION 0918-3) 31 — R/L (F) — C-04 — R/L (I) — 0922-101 2D

INSTRUMENT CLUSTER

(SECTION 0922-1c) g

DSC, DSC OFF, 4W ABS, BRAKE, EHPAS, AIR BAG, OIL, F-FOG, P, R, N, D, M, 1-4

TO MICROCOMPUTER

CIRCUIT FOR FAILURE DETECTION

SELECTOR INDICATOR DRIVE CIRCUIT

TO MICROCOMPUTER

(SECTION 0922-1c) h

1B — 0922-101 — B/Y (I) — R — C-04 — B/O (F) — N — C-02 — B/O (E) — 0922-104 — OIL PRESSURE SWITCH

0922-101
INSTRUMENT CLUSTER (I)

1O L/W	1M GY/V	1K L/R	1I GY/R	1G G/R	1E B/O	1C O/B	1A *
1P * <B/O>	1N *	1L O	1J *	1H *	1F B/O	1D * <BR/Y>	1B B/Y

2W BR/R	2U W/R	2S * [GY/O]	2Q * [W/G]	2O * <W/B>	2M *	2K *	2I *	2G *	2E * <Y/B>	2C R/B	2A * <R>
2X *	2V *	2T *	2R *	2P *	2N *	2L *	2J *	2H *	2F *	2D R/L	2B *

0922-104
OIL PRESSURE SWITCH (E)

B/O (Z6/ZY)

B/O (LF/L3)

HARNESS SYMBOL : (F) (E) (R)

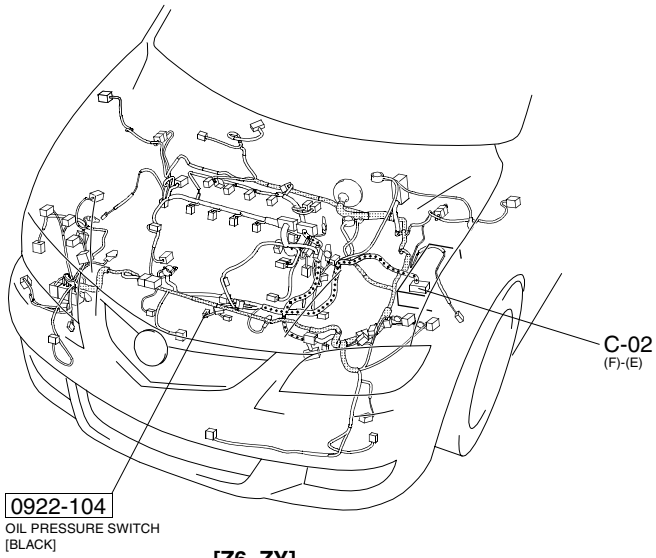

[Z6, ZY]

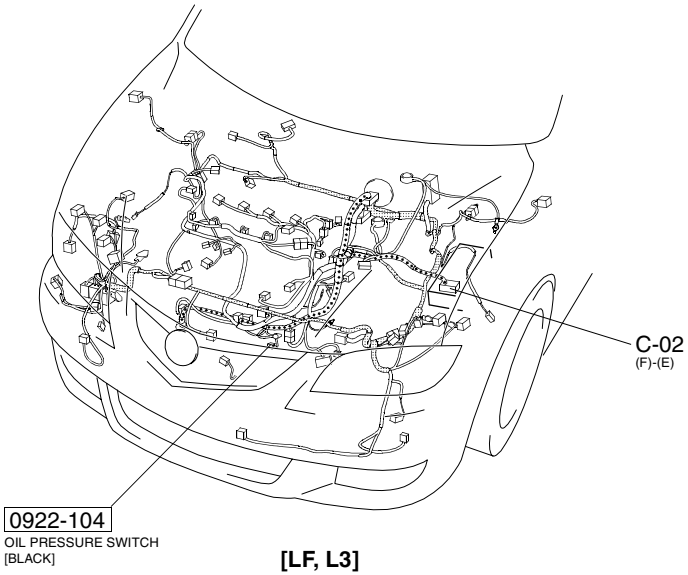

[LF, L3]

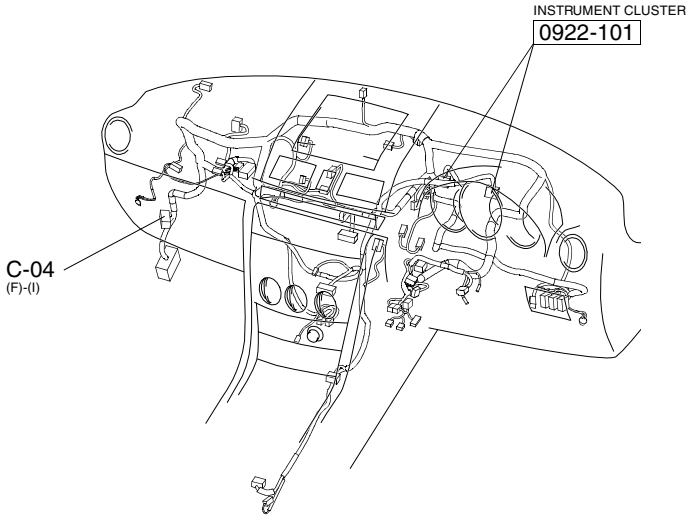

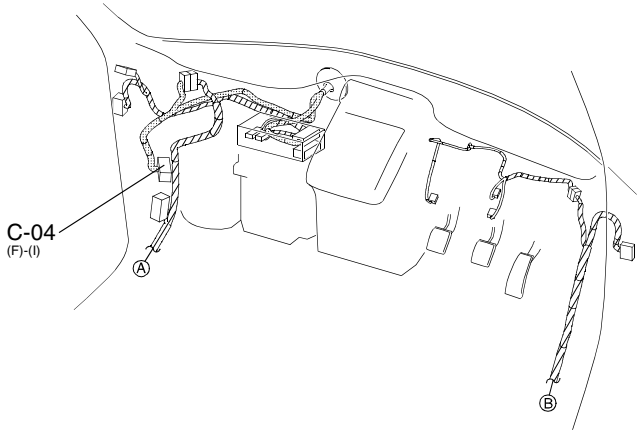

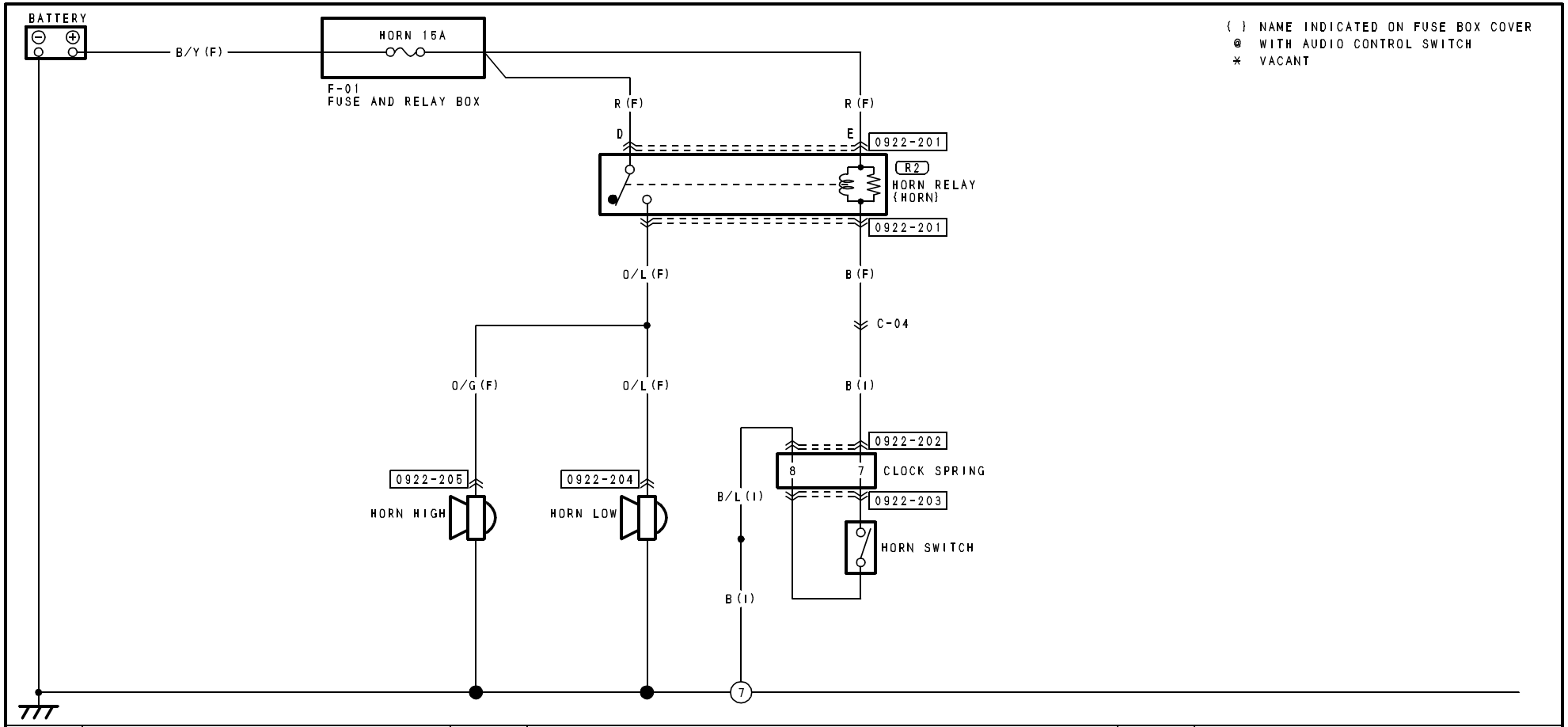

0922-201
HORN RELAY (F)

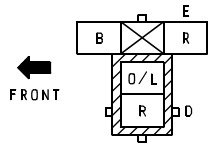

NOTE: SEEN FROM TERMINAL SIDE

0922-202
INSTRUMENT PANEL (I) -CLOCK SPRING

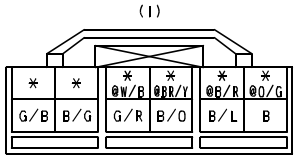

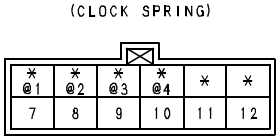

TERMINALS OF THIS CONNECTOR ARE INDICATED BY NUMBERS.

0922-203
HORN SWITCH (CLOCK SPRING)

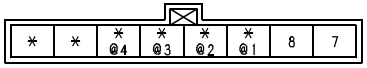

TERMINALS OF THIS CONNECTOR ARE INDICATED BY NUMBERS.

0922-204
HORN LOW (F)

O/L

0922-205
HORN HIGH (F)

O/G

HARNESS SYMBOL : (F) (E) (R)

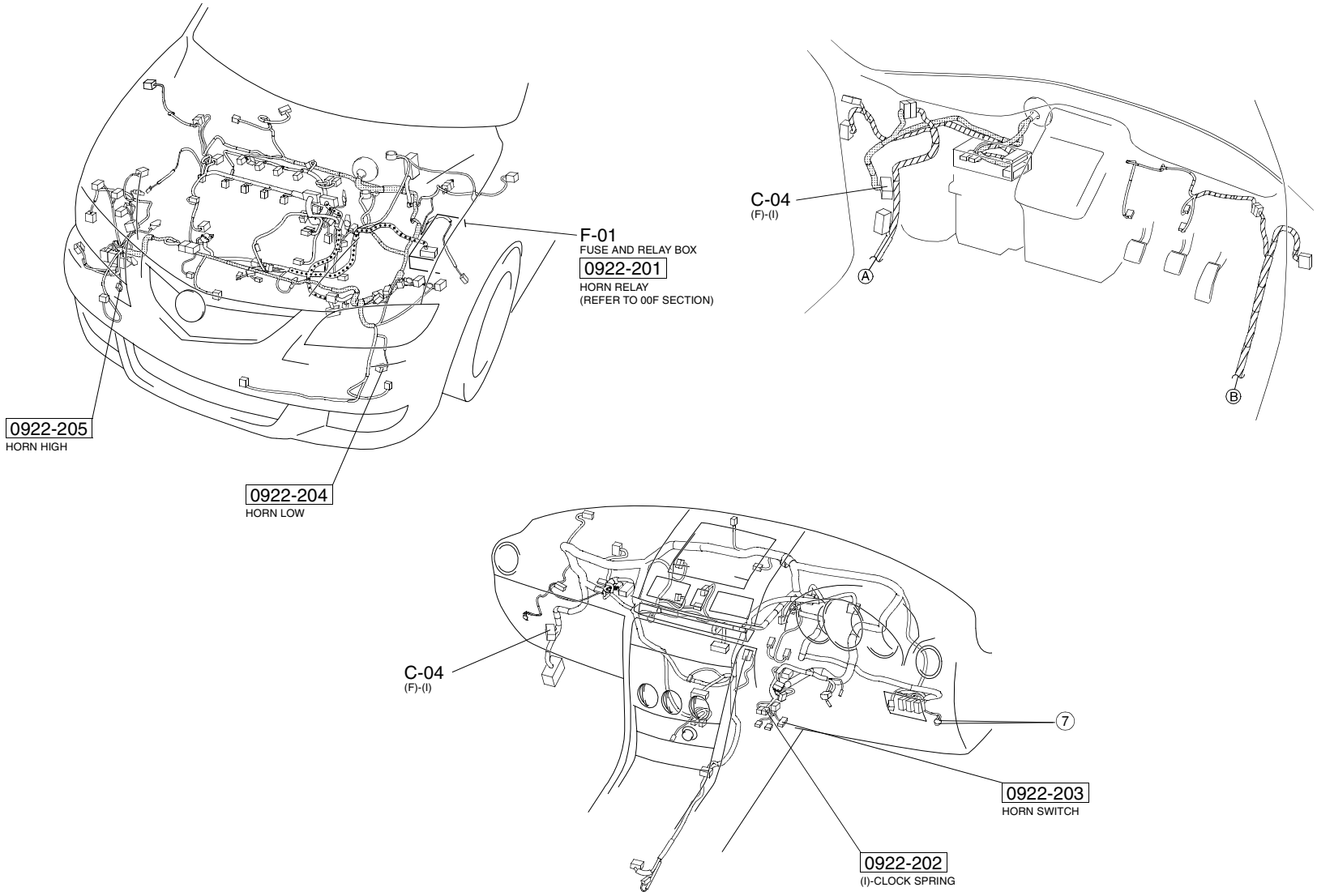

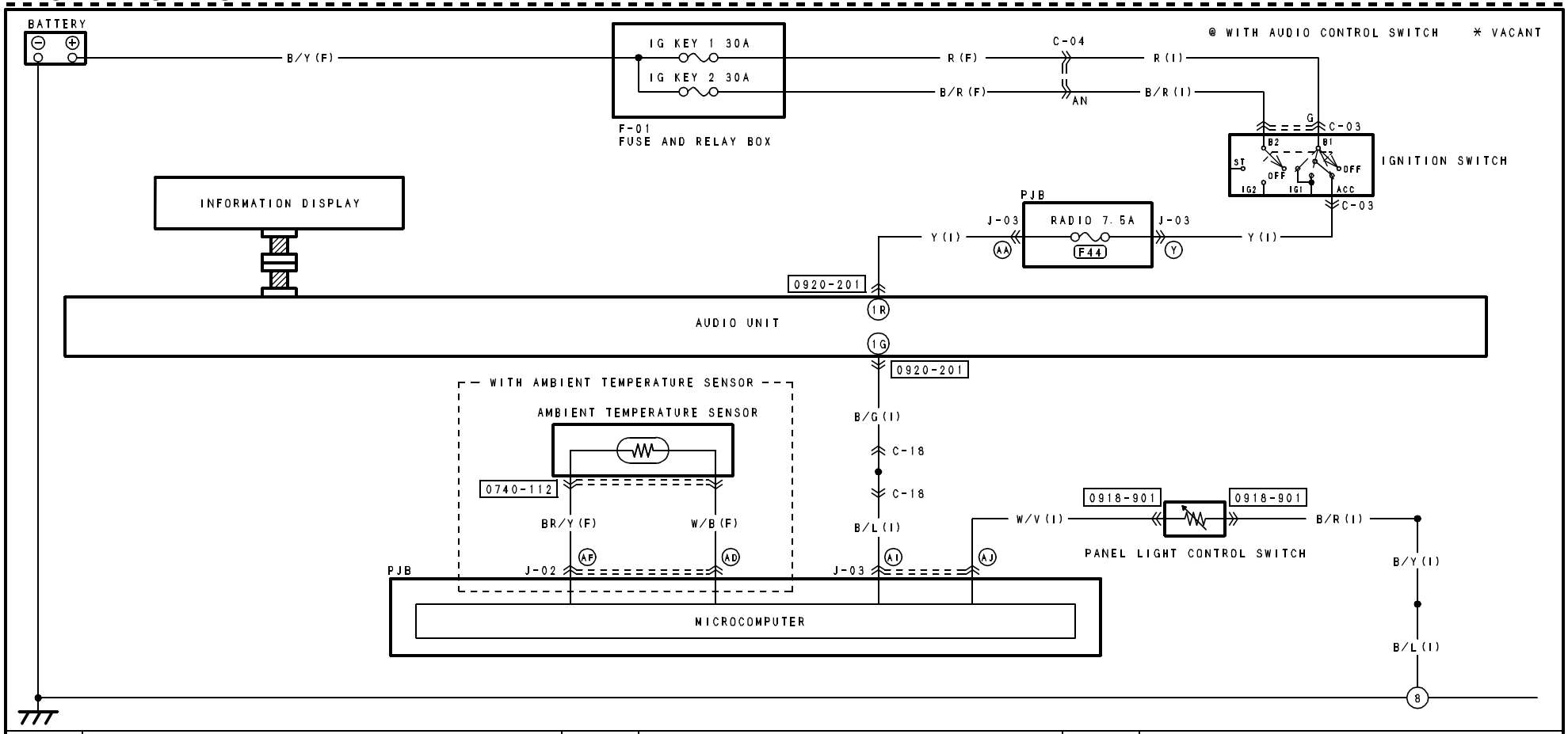

0920-201
AUDIO UNIT (I)

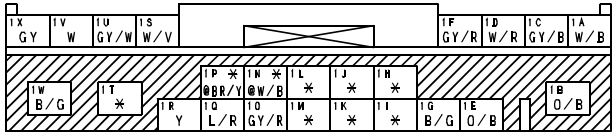

0740-112
AMBIENT TEMPERATURE SENSOR (F)

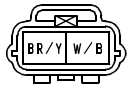

(WITH AMBIENT TEMPERATURE SENSOR)

0918-901
PANEL LIGHT CONTROL SWITCH (I)

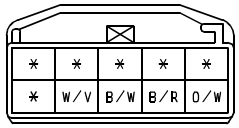

HARNESS SYMBOL : (F) (E) (R)

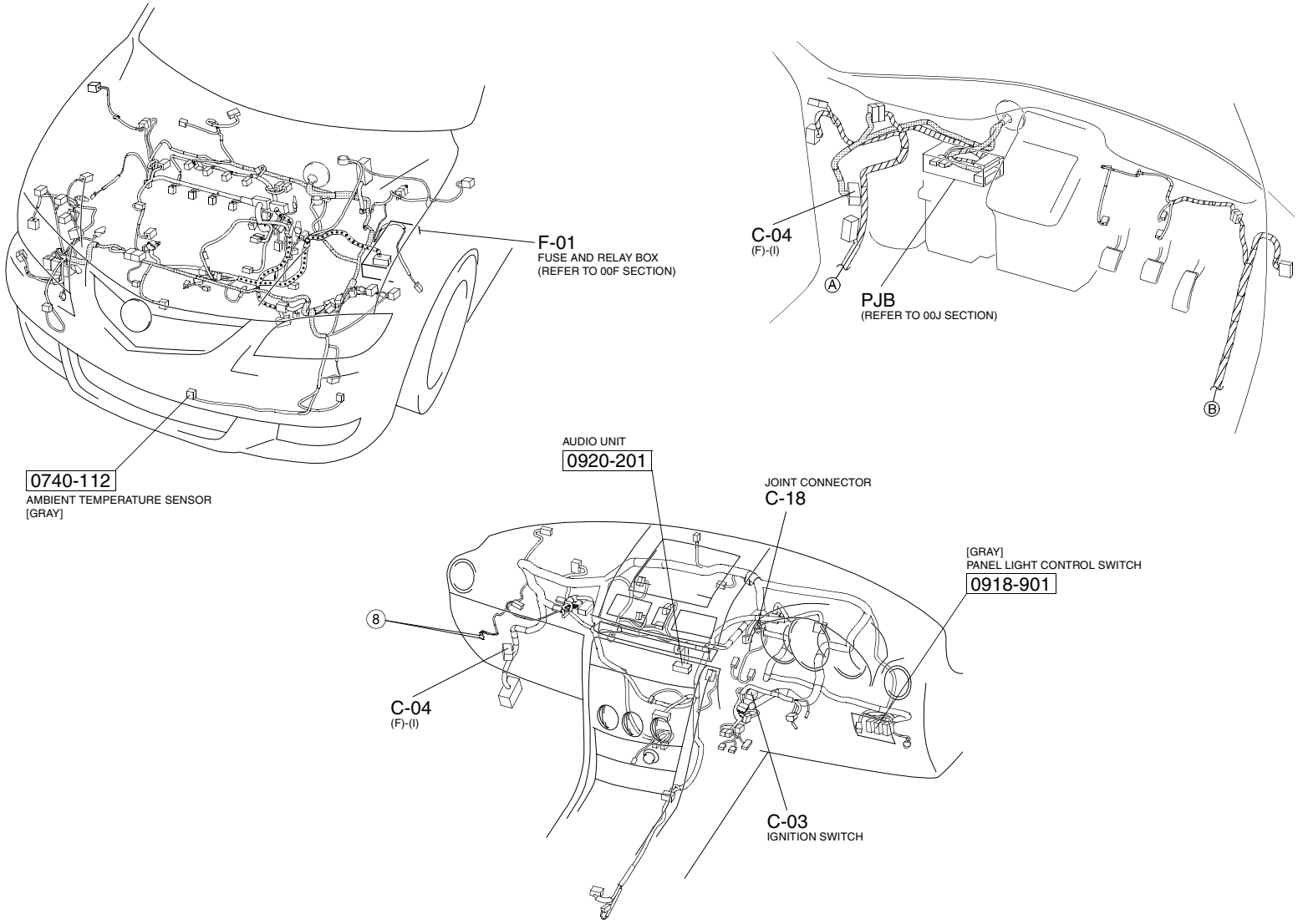

ALPHABETICAL INDEX

A

A/C RELAY 20,92
ABBREVIATIONS 12
ABS HU/CM 74
ABS WHEEL-SPEED SENSOR 74,76
AIR BAG MODULE 98
AIR INTAKE ACTUATOR 86
AIR MIX ACTUATOR 86
AIRFLOW MODE ACTUATOR 86
AMBIENT TEMPERATURE SENSOR 84,170-2
AUDIO AMPLIFIER 160-4
AUDIO CONTROL SWITCH 158, 160-2
AUDIO UNIT 158, 160-2, 170-2

B

BACK-UP LIGHT 134
BACK-UP LIGHT SWITCH 134
BAROMETRIC PRESSURE SENSOR 50,68
BLOWER MOTOR 84,88
BLOWER RELAY 20,84,88
BRAKE FLUID LEVEL SENSOR 162
BRAKE LIGHT 136
BRAKE SWITCH 136
BUCKLE SWITCH 96

C

CABIN TEMPERATURE SENSOR 84
CAMSHAFT POSITION SENSOR 48,66
CARGO COMPARTMENT LIGHT 140
CARGO COMPARTMENT LIGHT SWITCH 140
CIGARETTE LIGHTER 156
CLIMATE CONTROL UNIT 84,88
CLUTCH PEDAL POSITION SWITCH 54,68
COIL ANTENNA 120
COMBINED SENSOR 78
COMMON CONNECTOR LIST 26
CONDENSER 46,62,136
CONNECTOR 32
CONTROL VALVE BODY 56,70
COOLING FAN MOTOR 34
CRANKSHAFT POSITION SENSOR 48,66
CRASH ZONE SENSOR 96
CURTAIN AIR BAG MODULE 102

D

DATA LINK CONNECTOR-2 32
DOOR KEY CYLINDER SWITCH 116
DOOR LATCH SWITCH 112,116
DOOR LOCK ACTUATOR 112,116
DOOR LOCK-LINK SWITCH 112,116
DOOR LOCK RELAY 22,112,116
DOOR SPEAKER 160, 160-6
DOOR UNLOCK RELAY 22,112,116
DOUBLE LOCK RELAY 22,116
DRIVER-SIDE AIR BAG MODULE 98
DRIVER-SIDE CURTAIN AIR BAG MODULE 102
DRIVER-SIDE PRE-TENSIONER FRONT BUCKLE 102
DRIVER-SIDE SIDE AIR BAG MODULE 100
DRIVER-SIDE SIDE AIR BAG SENSOR 100
DSC HU/CM 76
DSC OFF SWITCH 78

E

EGR VALVE 52,66
EHPAS CONTROL MODULE 82
ELECTRICAL WIRING SCHEMATIC 18
ENGINE COOLANT TEMPERATURE SENSOR 50,64
EVAPORATOR TEMPERATURE SENSOR 86,90

F

FAN CONTROL MODULE 34
FAN SWITCH 88
FILAMENT 104
FOG LIGHT 130
FOG LIGHT RELAY 20,130
FOG LIGHT SWITCH 130
FRONT DOOR LATCH SWITCH 112,116
FRONT DOOR LOCK ACTUATOR 112,116
FRONT DOOR SPEAKER 160, 160-6
FRONT FOG LIGHT 130
FRONT FOG LIGHT RELAY 20,130
FRONT FOG LIGHT SWITCH 130
FRONT HEATED OXYGEN SENSOR 50,64
FRONT POWER WINDOW MOTOR 106
FRONT SIDE TURN LIGHT 132
FRONT TURN LIGHT 132
FRONT WIPER HIGH RELAY 22,150
FRONT WIPER LOW RELAY 22,150
FUEL GAUGE SENDER UNIT 164
FUEL INJECTOR 46,62
FUEL PUMP RELAY 20,36
FUEL PUMP UNIT 36
FUSE BOX 20

G

GENERAL INFORMATION 4
GENERATOR 38
GLOVE COMPARTMENT LIGHT 142
GROUND POINT 30

H

HAZARD WARNING SWITCH 132
HEADLIGHT 126
HEADLIGHT HIGH RELAY 22,124
HEADLIGHT LEVELING ACTUATOR 148
HEADLIGHT LEVELING SWITCH 148
HEADLIGHT LOW RELAY 22,124
HEATED OXYGEN SENSOR 50,64
HIGH-MOUNT BRAKE LIGHT 136
HORN 170
HORN RELAY 20,170
HORN SWITCH 170

I

IDLE AIR CONTROL VALVE 48,64
IGNITION COIL 46,62
ILLUMINATION LIGHT
ASHTRAY 142
AUDIO CONTROL SWITCH 146
CIGARETTE LIGHTER 144
DSC OFF SWITCH 146
HAZARD WARNING SWITCH 144
HEADLIGHT LEVELING SWITCH 144
IGNITION KEY 142
SELECTOR 144
INPUT/TURBINE SPEED SENSOR 58,72
INSTRUMENT CLUSTER 162
INTERIOR LIGHT 138

ALPHABETICAL INDEX

K
KEY INTERLOCK SOLENOID 80
KEY REMINDER SWITCH 162
KEYLESS CONTROL MODULE 112,116
KNOCK SENSOR 52,66

L
LICENSE PLATE LIGHT 128
LIFTGATE LOCK ACTUATOR 114,118
LIGHT SWITCH 124

M
MAGNETIC CLUTCH 92
MAIN RELAY 20,44,60
MANIFOLD ABSOLUTE PRESSURE SENSOR 64
MAP LIGHT 138
MASS AIR FLOW/
INTAKE AIR TEMPERATURE SENSOR 52,68

N
NEUTRAL SWITCH 54,68

O
OIL CONTROL VALVE 48,66
OIL PRESSURE SWITCH 168

P
PANEL LIGHT CONTROL SWITCH 142,170-2
PARKING BRAKE SWITCH 162
PARKING LIGHT 128
PASSENGER JUNCTION BOX (PJB) 22
PASSENGER-SIDE AIR BAG MODULE 98
PASSENGER-SIDE CURTAIN AIR BAG MODULE 102
PASSENGER-SIDE PRE-TENSIONER
FRONT BUCKLE 102
PASSENGER-SIDE SIDE AIR BAG MODULE 100
PASSENGER-SIDE SIDE AIR BAG SENSOR 100
PCM 44,60
POWER MOS FET 84
POWER OUTER MIRROR 110
POWER OUTER MIRROR SWITCH 110
POWER STEERING ANGLE SENSOR 82
POWER STEERING PRESSURE SWITCH 52
POWER WINDOW MAIN SWITCH 106
POWER WINDOW MOTOR 106
POWER WINDOW SUBSWITCH 108
PRE-TENSIONER FRONT BUCKLE 102
PURGE SOLENOID VALVE 48,66

R
RAIN SENSOR 152
REAR DOOR LATCH SWITCH 114,118
REAR DOOR LOCK ACTUATOR 114,118
REAR DOOR SPEAKER 160, 160-6
REAR HEATED OXYGEN SENSOR 50,64
REAR POWER WINDOW MOTOR 108
REAR TURN LIGHT 132
REAR WASHER MOTOR 154
REAR WINDOW DEFROSTER RELAY 20,104
REAR WIPER AND WASHER SWITCH 154
REAR WIPER MOTOR 154
REAR WIPER RELAY 22,154
REFRIGERANT PRESSURE SWITCH 86,90
RESISTOR 88
RETRACTABLE OUTER MIRROR 110

S
SAS CONTROL MODULE 96
SELECTOR LEVER COMPONENT 80
SHIFT-LOCK RELAY 22,80
SIDE AIR BAG MODULE 100
SIDE AIR BAG SENSOR 100
SIDE TURN LIGHT 132
SOLAR RADIATION SENSOR 86
SOLENOID VALVE 56,70
STARTER 40,42
STARTER INTERLOCK SWITCH 42
STARTER RELAY 20,40,42
STEERING ANGLE SENSOR 78
SUNROOF SWITCH 122
SUNROOF UNIT 122

T
TAILLIGHT 128
THROTTLE POSITION SENSOR 50,64
TNS RELAY 22,124
TRANSAXLE RANGE SWITCH 40,56,70
TRUNK COMPARTMENT LIGHT 140
TRUNK COMPARTMENT LIGHT SWITCH 140
TURN LIGHT 132
TURN SWITCH 132
TWEETER 160, 160-6

V
VARIABLE INTAKE-AIR SHUTTER
VALVE ACTUATOR 48
VARIABLE INTAKE-AIR SOLENOID VALVE 66
VARIABLE TUMBLE SHUTTER VALVE ACTUATOR 48
VARIABLE TUMBLE SOLENOID VALVE 66
VEHICLE IDENTIFICATION NUMBERS (VIN) 2
VEHICLE SPEED SENSOR 54,58,68,72

W
WASHER MOTOR
(WINDSHIELD) 152
(REAR) 154
WINDSHIELD WASHER MOTOR 152
WINDSHIELD WIPER AND WASHER SWITCH 152
WINDSHIELD WIPER MOTOR 152
WIPER AND WASHER SWITCH
(WINDSHIELD) 152
(REAR) 154
WIPER MOTOR
(WINDSHIELD) 152
(REAR) 154
WIPER RELAY 22,150,154
WIRING COLOR CODE 9
WOOFER 160-4