WARNING

Servicing a vehicle can be dangerous. If you have not received service-related training, the risks of injury, property damage, and failure of servicing increase. The recommended servicing procedures for the vehicle in this workshop manual were developed with Mazda-trained technicians in mind. This manual may be useful to non-Mazda trained technicians, but a technician with our service-related training and experience will be at less risk when performing service operations. However, all users of this manual are excepted at least to know general safety procedures.

This manual contains “Warnings” and “Cautions” applicable to risks not normally encountered in a general technician’s experience. They should be followed to reduce the risk of injury and the risk that improper service or repair may damage the vehicle or render it unsafe. It is also important to understand that the “Warnings” and “Cautions” are not exhaustive. It is impossible to warn of all the hazardous consequences that might result from failure to follow the procedures.

The procedures recommended and described in this manual are effective methods of performing service and repair. Some require tools specifically designed for a specific purpose. Per-sons using procedures and tools which are not recommended by Mazda Motor Corporation must satisfy themselves thoroughly that neither personal safety nor safety of the vehicle will be jeopardized.

The contents of this manual, including drawings and specifications, are the latest available at the time of printing, and Mazda Motor Corporation reserves the right to change the vehicle designs and alter the contents of this manual without notice and without incurring obligation.

Parts should be replaced with genuine Mazda replacement parts or with parts which match the quality of genuine Mazda replacement parts. Persons using replacement parts of lesser quality than that of genuine Mazda replacement parts must satisfy themselves thoroughly that neither personal safety nor safety of the vehicle will be jeopardized.

Mazda Motor Corporation is not responsible for any problems which may arise from the use of this manual. The cause of such problems includes but is not limited to insufficient service-related training, use of improper tools, use of replacement parts of lesser quality than that of genuine Mazda replacement parts, or not being aware of any revision of this manual.

Mazda RX-8
Wiring Diagram

CONTENTS

TITLE	Section
GENERAL INFORMATION OF WIRING DIAGRAMS	GI
GROUND POINTS	Y
ELECTRICAL WIRING SCHEMATIC	W
SYSTEM CIRCUIT DIAGRAM/ CONNECTOR LOCATIONS	A-U
COMMON CONNECTORS	X
ALPHABETICAL INDEX	AI

FOREWORD

This wiring diagram incorporates the wiring schematics of the basic vehicle and available optional equipment. Actual vehicle wiring may vary slightly depending on optional equipment or local specifications, or both. All information in this booklet is based on information available at the time of printing. Mazda Motor Corporation reserves the right to make changes without previous notice.

Mazda Motor Corporation
HIROSHIMA, JAPAN

APPLICATION:
This manual applies to vehicles beginning with the Vehicle Identification Numbers (VIN) on the following page.

©2008 Mazda Motor Corporation

PRINTED IN AUSTRALIA, APR. 2008
5758-1A-08D

VEHICLE IDENTIFICATION NUMBERS (VIN)
(CHASSIS NUMBER)

Australian specs.
JM0 FE1032*0 300001–

U.K. specs.
JMZ SE1736*# 300001–
JMZ SE17N2*# 300001–

WIRING COLOR CODE

COLOR	CODE	COLOR	CODE
BLACK	B	ORANGE	O
BLUE	L	PINK	P
BROWN	BR	RED	R
DARK BLUE	DL	SKY BLUE	SB
DARK GREEN	DG	TAN	T
GRAY	GY	VIOLET	V
GREEN	G	WHITE	W
LIGHT BLUE	LB	YELLOW	Y
LIGHT GREEN	LG		

SYSTEM INDEX

GENERAL INFORMATION 2
GROUND POINT 18
ELECTRICAL WIRING SCHEMATIC 22

ENGINE-RELATED SYSTEM
CHARGING SYSTEM 24
STARTING SYSTEM 24
ENGINE CONTROL SYSTEM 26
FUEL CONTROL SYSTEM 44
COOLING FAN SYSTEM 46

CHASSIS-RELATED SYSTEM
AUTOMATIC TRANSMISSION CONTROL SYSTEM 92
ELECTRIC POWER STEERING (EPS) SYSTEM 144
DYNAMIC STABILITY CONTROL (DSC) SYSTEM 146

INSTRUMENT CLUSTER-RELATED SYSTEM
INSTRUMENT CLUSTER 50
INFORMATION DISPLAY 58

BODY-RELATED SYSTEM
WINDSHIELD WIPER AND WASHER 60
HORN 84
REAR WINDOW DEFROSTER 96
POWER WINDOW SYSTEM 132
KEYLESS UNIT 134
HEATED OUTER MIRROR 140
POWER OUTER MIRROR 140
SLIDING SUNROOF 142
POWER SEAT 150
SEAT WARMER 154
AIR BAG SYSTEM 156
IMMOBILIZER SYSTEM 162
TRUNK LID OPENER 164

INTERIOR LIGHTING SYSTEM
TRUNK COMPARTMENT LIGHT 96
ILLUMINATION LIGHT 98
COURTESY LIGHT 104
INTERIOR LIGHT 104
MAP LIGHT 104
VANITY MIRROR ILLUMINATION 104

EXTERIOR LIGHTING SYSTEM
HEADLIGHT
DISCHARGE TYPE 62
HALOGEN TYPE 64
HEADLIGHT CLEANER SYSTEM 66
FRONT FOG LIGHT 68
REAR FOG LIGHT 70
LICENSE PLATE LIGHT 72
PARKING LIGHT 72
TAILLIGHT 72
HEADLIGHT AUTO LEVELING SYSTEM 74
AUTO LIGHT CONTROL SYSTEM 76
TURN AND HAZARD WARNING LIGHT 80
BACK-UP LIGHT 82
BRAKE LIGHT 84
HIGH-MOUNT BRAKE LIGHT 84
GROUND ILLUMINATION LIGHT 104

AIR CONDITIONING-RELATED SYSTEM
HEATER AND AIR CONDITIONER 86
MAGNETIC CLUTCH CONTROL SYSTEM 90

ACCESSORY
ACC RELAY 106
CIGARETTE LIGHTER 106
AUDIO SYSTEM
WITHOUT BOSE 108
WITH BOSE 112
CAR-NAVIGATION SYSTEM 122
ACCESSORY SOCKET 164

OTHER
DATA LINK CONNECTOR 166

COMMON CONNECTOR LIST 168
ALPHABETICAL INDEX 174

VEHICLE IDENTIFICATION NUMBER (VIN) CODE

Australian specs.

J M 0 F E 1 0 3 2 9 0 1 2 3 4 5 6

Serial No.	
Dummy	0
Model year	9= 2009
Minor change code	2
Engine type	3= 13B
Dummy	0
Body	1= Closed body
Carline & Series	FE= Mazda RX-8
World manufacturer identification	JM0= Australian

U.K. specs.

J M Z S E 1 7 N 2 9 0 1 2 3 4 5 6

Serial No.	
Plant	0= Hiroshima 1= Hofu
for Israel, China etc. : Model year for Indonesia etc. : Model year	9= 2009 9= 2009
for Europe-R.H.D. : Dummy for Europe-L.H.D. : Dummy	9,A,B,C 9,A,B,C
for China : Check digit	*
for Others: Transmission	6= 6MT 2= 5MT
Engine type	N= 13B-Standard power 3= 13B-High power
Body style	7= Coupe
Drive axle	1= 4x2
Vehicle type	SE= Mazda RX-8
World manufacturer identification	JMZ= European (L.H.D., U.K.)

VEHICLE IDENTIFICATION NUMBERS (VIN)

Australian specs.
JM0 FE1032*0 300001–

U.K. specs.
JMZ SE1736*# 300001–
JMZ SE17N2*# 300001–

Contents of wiring diagrams

- This manual comprises the sections shown below.

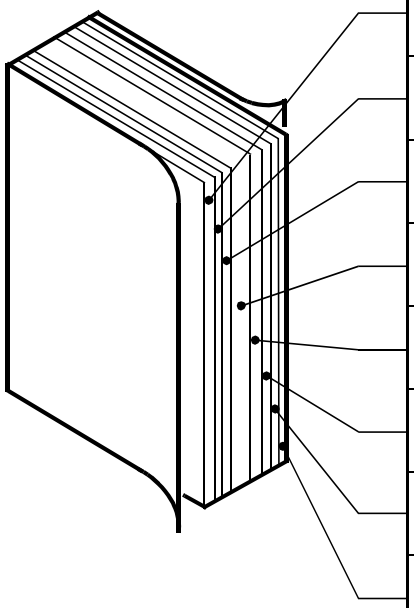

GI	**General information of wiring diagrams**	A how-to on using and reading wiring diagrams, using test equipment,checking harness and connectors,and finding trouble spots
Y	**Ground points**	Ground routes from and to the battery
W	**Electrical wiring schematic**	Shows main fuses and other fuses for each system
A-U	**System circuit diagram/ connector locations**	Shows circuit and connector diagrams and component and connector location diagrams
X	**Common connectors**	Shows connectors common throughout system
JB	**Joint box complete wiring system**	Shows internal circuits and connectors
FB	**Main fuse block complete wiring system**	Shows internal circuits and connectors
AI	**Alphabetical Index**	Gives page number of circuit diagram for each component

Depending on the vehicle model, the actual sections may be different.

Ground points

- This shows ground points of the harness.

GROUND POINTS(4SD)

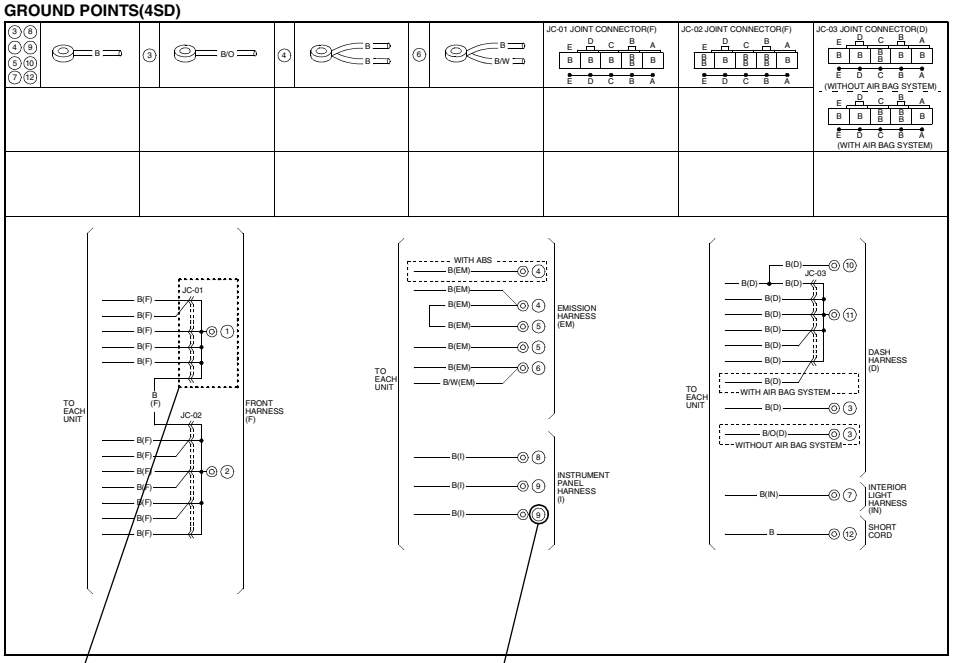

Ground indication

On vehide	Indication
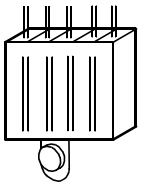	To circuit 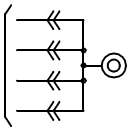

On circuit diagrams and ground points

The ground connection numbers in system circuit diagrams correspond to those in the ground point diagram.

ENGINE CONTROL SYSTEM

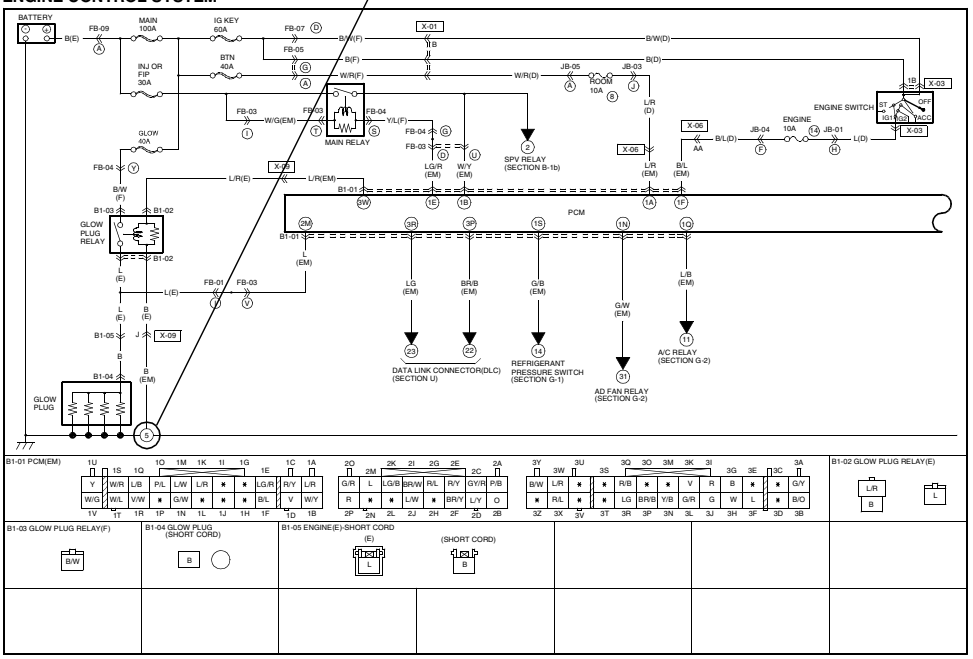

System circuit diagram/connector diagram

- These diagrams show the circuits for each system, from the power supply to the ground. The power supply side is on the upper part of the page, the ground side on the lower part. The diagrams describe circuits with the ignition switch off.
  Below is an explanation of the various points in the diagram.

System name

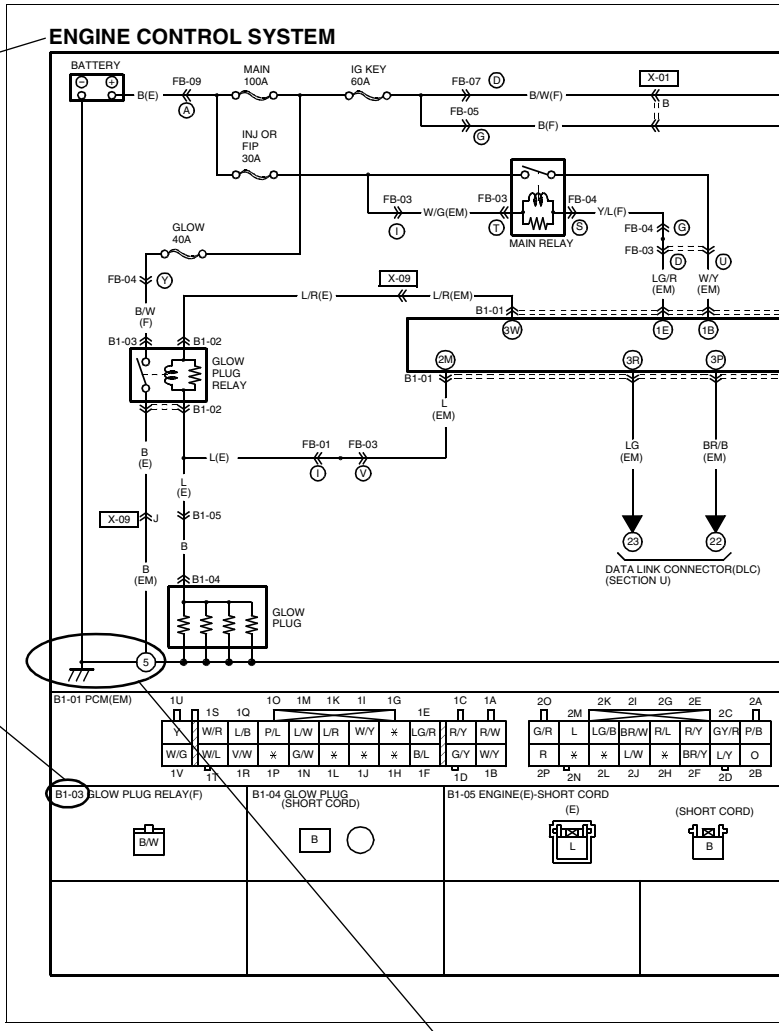

Connector code

The prefix letter indicates the system in which the connector is used.

- Y : Ground connector
- A : Charging system/starting system connectors
- B : Engine control system connectors
- C : Gauge control system connectors
- D : Wiper system connectors
- E : Lighting system connectors
- F : Signal system connectors
- G : Air-conditioning system connectors
- H : Transmission control/Key interlock/ Shift-lock system connectors
- I : Interior light system connectors
- J : Audio/radio connectors
- K : Power window/power door lock system connectors
- L : Remote control mirror system connectors
- M : Sliding sunroof system connectors
- O : Anti-lock brake system connectors
- P : Power seat/seat warmer system connectors
- Q : Auto cruise control system connectors
- S : Passive shoulder belt control/Airbag system connectors
- T : Others
- U : Data link connector
- X : Common connectors
- JB : Joint box connections
- FB : Main fuse block

Ground numbers

A harness ground is represented differently than a unit ground.

Types of grounds	Symbol
Harness 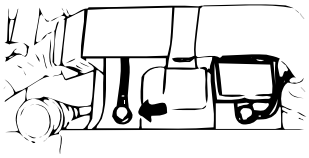	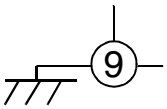
Unit 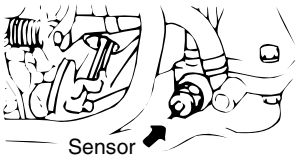	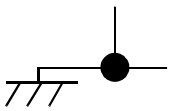

The number indicates that the circuit continues to the related system diagram.

System code

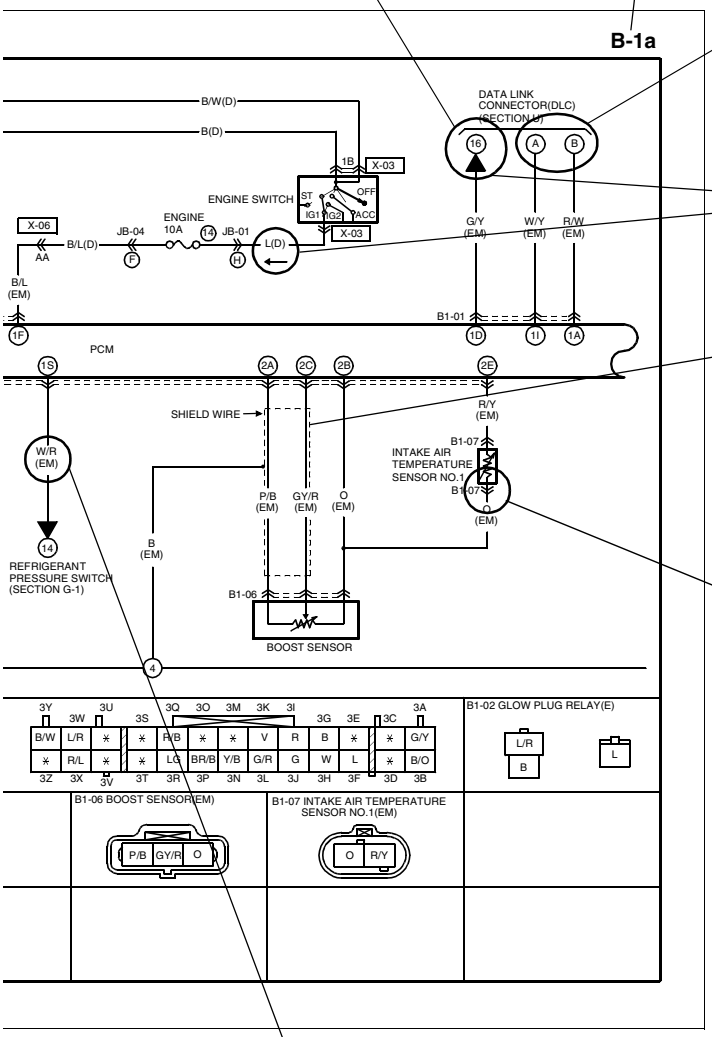

Multiplex communication

Indicates communication with connected parts. Signals are transmitted back and forth between connected parts.

Current symbol

Current flows in the direction of the arrow.

Indicates shielded wire.*

* Shielded wire :
Prevents signal disturbances from electrical interference.
Wire is covered by a metal meshing for grounding.

Connector symbols

- Male and female connectors are represented as follows in the circuit and connector diagrams.

		Circuit diagram symbol	Connector diagram symbol
Male	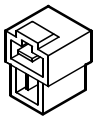	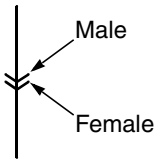	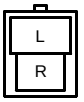
Female	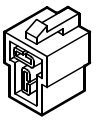		

- Like connectors are linked by dashed lines between the connector symbols.
- Connector diagrams show connectors on the harness side. The terminal indicates the view from the harness side.

(Example)

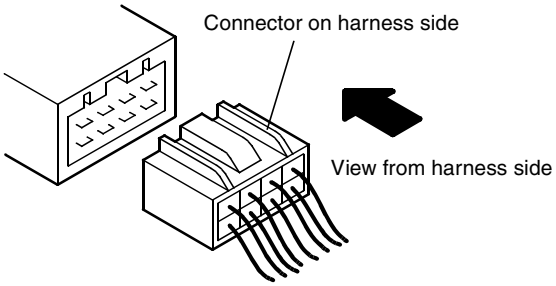

- Colors for connectors except white are given in locations.
- Unused terminals are indicated by ✻ .

Wire color code (harness symbol)

- Two-color wires are indicated by a two-letter symbol.The first indicates the base color of the wire, the second the color of the stripe.
  For example:

  W/R is a white wire with a red strip
  BR/Y is a brown wire with a yellow strip

Symbol (Example)

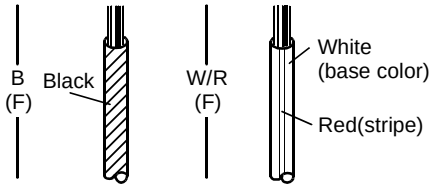

- The harness symbol is in ( ) following the harness symbols (refer to P-7.).

Routing diagram

- The routing diagram shows where electrical components are on the system circuit diagram by call out line and connector symbols.

Connector symbol

Shows the system that uses the connector.

(Example)

Connector	Symbol
Common connectors	X-19
System connectors	I-03

Component name

Shows the names of components in routing diagrams.

Ground symbol

Shows the ground in system diagrams.

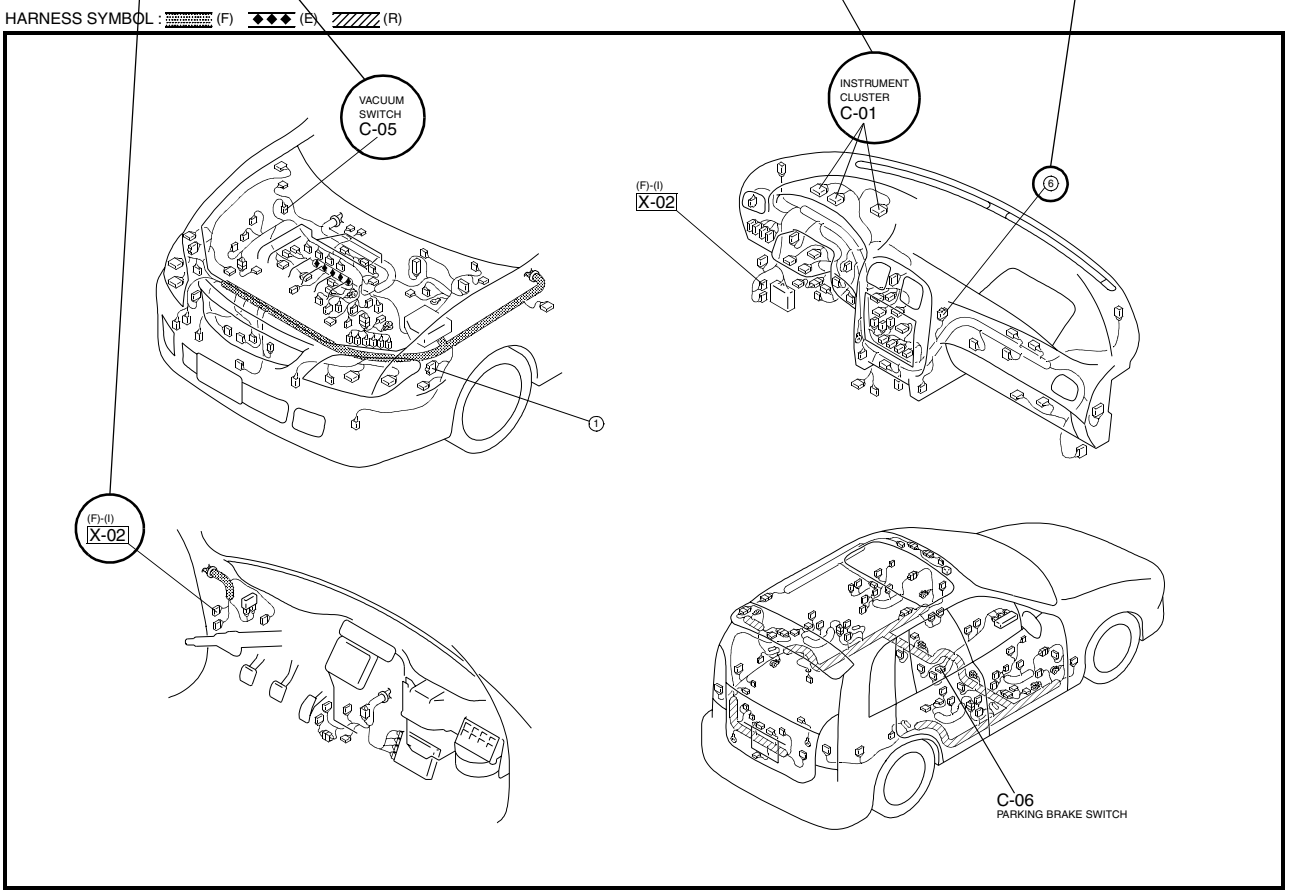

Harness symbols

DESCRIPTION OF HARNESS	SYMBOL		DESCRIPTION OF HARNESS	SYMBOL	
FRONT HARNESS	(F)		DOOR NO.1 HARNESS	(DR1)	
FRONT NO.2 HARNESS	(F2)		DOOR NO.2 HARNESS	(DR2)	
ENGINE HARNESS	(E)	◆◆◆	DOOR NO.3 HARNESS	(DR3)	
DASH HARNESS	(D)	○○○	DOOR NO.4 HARNESS	(DR4)	
REAR HARNESS	(R)		FLOOR HARNESS	(FR)	
REAR NO.2 HARNESS	(R2)		INTERIOR LIGHT HARNESS	(IN)	
REAR NO.3 HARNESS	(R3)		A/C HARNESS	(AC)	
INSTRUMENT PANEL HARNESS	(I)		INJECTION HARNESS	(INJ)	
EMISSION HARNESS	(EM)		HAND BRAKE HARNESS	(HB)	
EMISSION NO.2 HARNESS	(EM2)				
EMISSION NO.3 HARNESS	(EM3)				

SERVICE WARNING AND CAUTION FOR VEHICLES WITH SRS AIR BAG SYSTEM

If the SRS air bag system inspection is not performed correctly in accordance with the workshop manual procedures it could cause the system to operate (deploy) accidentally, resulting in injury.

Always follow the service warnings and cautions in the workshop manual when performing the SRS air bag system-related inspection or servicing.

SERVICE WARNING FOR VEHICLES WITH DISCHARGE HEADLIGHTS

If the discharge headlight inspection and servicing is not done using the correct procedures in the workshop manual, it could result in electrical shock.

Always follow the service warnings and cautions in the workshop manual when performing the discharge headlight-related inspection or servicing.

Symbols

Symbol	Meaning
Battery	• Generates electricity through chemical reaction. • Supplies direct current to circuits.
Ground (1)	• Connecting point to vehicle body or other ground wire where current flows from positive to negative terminal of battery. • Ground (1) indicates a ground point to body through wire harness. • Ground (2) indicates point where component is grounded directly to body. Remarks • Current will not flow through a circuit if ground is faulty.
Ground (2)	
Fuse (1) (box)	• Melts when current flow exceeds that specified for circuit, interrupts current flow. Precautions • Do not replace with fuses exceeding specified capacity. <Blade type> <Tube type> <Cartridge type> <Fusible link>
Fuse (2) (Cartridge)	
Main fuse/ Fusible link	
Transistor (1) Collector (C) Base (B) NPN Emitter (E)	• Electrical switching component. • Turns on when voltage is applied to the base (B). Collector indication mark B E C E C B C E B • Reading code. 2 S C 828 A Revision mark Semiconductor Number of terminals A:High-frequency PNP B:Low-frequency PNP C:High-frequency NPN D:Low-frequency NPN
Transistor (2) Collector (C) Base (B) PNP Emitter (E)	

Symbol	Meaning
Light 3.4W	• Emits light and generates heat when current flows through filament.
Resistance	• A resistor with a constant value. • Mainly used to protect electrical components in circuits by maintaining rated voltage.
Motor M	• Converts electrical energy into mechanical energy.
Pump P	• Pulls in and discharges gases and liquids.
Cigarette lighter	• Electrical coil that generates heat.
Horn	• Generates sound when current flows.
Speaker	
Heater	• Generates heat when current flows.
Speed sensor	• Movement of magnet in speedometer turns contact within sensor on and off.
Ignition switch ST B2 B1 IG2 OFF IG1 OFF ACC	• Turning ignition key switches circuit to operate various component. (NOTE) Ignition switch is called engine switch on diesel vehicles.

Symbol	Meaning	Symbol	Meaning
Switch (1) Normally open (NO)	• Allows or breaks current flow by opening and closing curcuits.	Harness **Connection** When circuit C-D is connected to circuit A-B, the connection D is indicated by a black dot.	A D B C For vehicles with ABS, use the A-B circuit.
Switch (2) Normally closed (NC)		**Selection** Diversion point D for the different circuits accord-ing to the vehi-cle's specification is indicated by a white dot.	WITH ABS A D B WITHOUT ABS C For vehicles without ABS, use the C-B circuit.
Relay (1) Normally open (NO)	• Current flowing through coil produces electromagnetic force causing contact to open or close. No current to coil: No flow Current to coil: Flow		
Relay (2) Normally closed (NC)	• Current flowing through coil produces electromagnetic force causing contact to close. No current to coil: Flow Current to coil: No flow		
Sensor (variable)	• Resistance changes with other components operation.	Diode	• Known as a semiconductor rectifier, the diode allows current flow in one direction only. Cathode(K) Anode(A) Flow of electric current K A K A K A
Sensor (thermistor)	• Resistance changes with temperature.	Light-emitting diode (LED)	• A diode that lights when current flows. • Unlike ordinary bulbs, the diode does not generate heat when lit. Cathode(K) Anode(A) Cathode(K) Anode(A) Flow of current
Capacitor	• Component that temporarily stores electrical charge.		
Solenoid	• Current flowing through coil generates electromagnetic force to operate plungers.	Reference diode (Zener diode)	• Allows current to flow in one direction up to a certain voltage; allows current to flow in the other direction once that voltage is exceeded.

Reading Wiring Diagrams

Symbol	Meaning
Extent of the change in the wiring position (1) 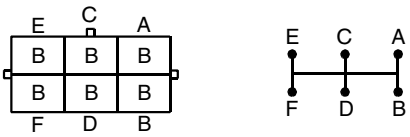 	• The wiring position can be exchanged freely within the connector.
Extent of the change in the wiring position (2) 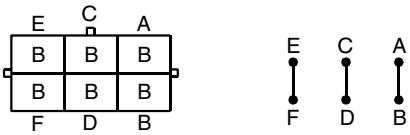 	• The wiring position can be exchanged according to the following combinations only. Between A and B, Between C and D, Between E and F
Extent of the change in the wiring position (3) 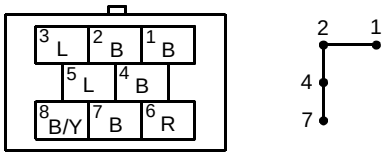 	• The wiring position can be exchanged according to the following combinations only. Between 1, 2, 4 and 7. • The wiring positions may be indicated by numbers for some connectors.

Abbreviations used in this manual

3GR	THIRD GEAR
4GR	FOURTH GEAR
A	AMPERE
A/C	AIR CONDITIONING
A/F	AIR FUEL RATIO
AAS	AUTO ADJUSTING SUSPENSION
ABS	ANTI-LOCK BRAKING SYSTEM
ACC	ACCESSORIES
ACV	AIR CONTROL VALVE
ADD	ADDITIONAL
AIS	AIR INJECTION SYSTEM
ALL	AUTOMATIC LOAD LEVELING
AM	AMPLITUDE MODULATION
AMP	AMPLIFIER
ANT	ANTENNA
ASV	AIR SUPPLY VALVE
AT	AUTOMATIC TRANSMISSION
ATX	AUTOMATIC TRANSAXLE
B+	BATTERY POSITIVE VOLTAGE
BAC	BYPASS AIR CONTROL
BTN	BRAKE TAIL NUMBER
CAN	CONTROLLER AREA NETWORK
CARB	CARBURETOR
CIGAR	CIGARETTE
CIS	CONTINUOUS FUEL INJECTION SYSTEM
CKP	CRANKSHAFT POSITION SENSOR
CM	CONTROL MODULE

CMP	CAMSHAFT POSITION SENSOR
COMBI	COMBINATION
CON	CONDITIONER
CONT	CONTROL
CPU	CENTRAL PROCESSING UNIT
DEF	DEFROSTER
DI	DISTRIBUTOR IGNITION
DLC	DATA LINK CONNECTOR
DLI	DISTRIBUTORLESS IGNITION
DOHC	DOUBLE-OVERHEAD CAMSHAFT
DRL	DAYTIME RUNNING LIGHT
DTC	DIAGNOSTIC TROUBLE CODE(S)
DTM	DIAGNOSTIC TEST MODE
ECPS	ELECTRONICALLY CONTROLLED POWER STEERING
ECT	ENGINE CONTROL TEMPERATURE
EGR	EXHAUST GAS RECIRCULATION
EI	ELECTRONIC IGNITION
ELEC	ELECTRIC
ELR	EMERGENCY LOCKING RETRACTOR
ET	ELECTRONIC THROTTLE
ETV	ELECTRONIC THROTTLE VALVE
EVAP	EVAPORATIVE EMISSION
F	FRONT
F/I	FUEL INJECTOR
FICB	FAST-IDLE CAM BREAKER
FM	FREQUENCY MODULATION
FP	FUEL PUMP

FPR	FUEL PUMP RELAY
GEN	GENERATOR
GND	GROUND
H/D	HEATER/DEFROSTER
HEAT	HEATER
HI	HIGH
HO2S	HEATED OXYGEN SENSOR
HU	HYDRAULIC UNIT
IAC	IDLE AIR CONTROL
IAT	INTAKE AIR TEMPERATURE
IG	IGNITION
ILLUMI	ILLUMINATION
INT	INTERMITTENT
JB	JOINT BOX
KS	KNOCK SENSOR
LCD	LIQUID CRYSTAL DISPLAY
LF	LEFT FRONT
LH	LEFT HAND
LO	LOW
LR	LEFT REAR
M	MOTOR
MAF	MASS AIR FLOW
MAP	MANIFOLD ABSOLUTE PRESSURE
MFI	MULTIPORT FUEL INJECTION
MID	MIDDLE
MIL	MALFUNCTION INDICATOR LAMP
MIN	MINUTE
MIX	MIXTURE
MPX	MULTIPLEX
MT	MANUAL TRANSMISSION
MTX	MANUAL TRANSAXLE
N	NEUTRAL
NC	NORMALLY CLOSED
NO	NORMALLY OPEN
O2S	OXYGEN SENSOR
OBD	ON-BOARD DIAGNOSTIC
O/D	OVER DRIVE
OFF	SWITCH OFF
ON	SWITCH ON
OSC	OSCILLATOR
P	POWER
P/S	POWER STEERING
PCM	POWERTRAIN CONTROL MODULE
PNP	PARK/NEUTRAL POSITION
PRC	PRESSURE REGULATOR CONTROL
PRG	PURGE SOLENOID VALVE
PSP	POWER STEERING PRESSURE
PTC	POSITIVE TEMPERATURE COEFFICIENT HEATER
PWM	PULSE WIDTH MODULATION
QSS	QUICK-START SYSTEM

R	REAR
REC	RECIRCULATION
RF	RIGHT FRONT
RH	RIGHT HAND
RPM	REVOLUTIONS PER MINUTE
RR	RIGHT REAR
SAS	SOPHISTICATED AIR BAG SENSOR
SFI	SEQUENTIAL MULTIPOINT FUEL INJECTION
SOL	SOLENOID
SPV	SPILL VALVE
ST	START
SW	SWITCH
TC	TURBOCHARGER
TCC	TORQUE CONVERTER CLUTCH
TCM	TRANSMISSION(TRANSAXLE)CONTROL MODULE
TCS	TRACTION CONTROL SYSTEM
TEMP	TEMPERATURE
TFT	TRANSAXLE FLUID TEMPERATURE
TNS	TAIL NUMBER SIDE LIGHTS
TICS	TRIPLE INDUCTION CONTROL SYSTEM
TP	THROTTLE POSITION SENSOR
TR	TRANSMISSION(TRANSAXLE)RANGE
TWS	TOTAL WIRING SYSTEM
V	VOLT
VAF	VOLUME AIR FLOW SENSOR
VENT	VENTILATION
VICS	VARIABLE INERTIA CHARGING SYSTEM
VOL	VOLUME
VR	VOLTAGE REGULATOR
VRIS	VARIABLE RESONANCE INDUCTION SYSTEM
VSS	VEHICLE SPEED SENSOR
VTCS	VARIABLE TUMBLE CONTROL SYSTEM
W	WATT(S)
WOT	WIDE OPEN THROTTLE

ELECTRICAL PARTS

B6U000000006W03

Battery cable

- Before disconnecting connectors or removing electrical parts, disconnect the negative battery cable.

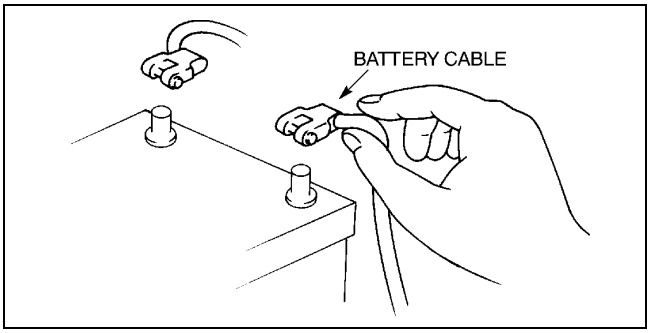

WGIWXX0007E

Wiring Harness

- To remove the wiring harness from the clip in the engine room, pry up the hook of the clip using a flathead screwdriver.

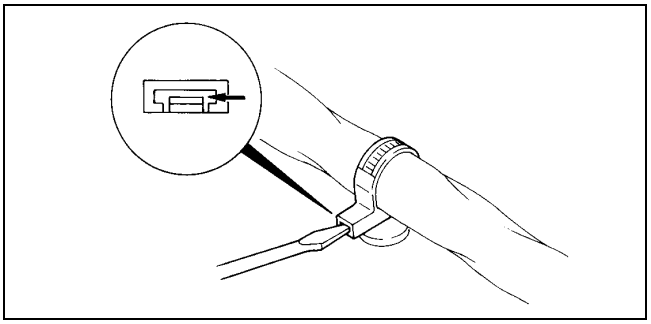

WGIWXX0039E

Caution

- **Do not remove the Harness protective tape. Otherwise, the wires could rub against the body, which could result in water penetration and electrical shorting.**

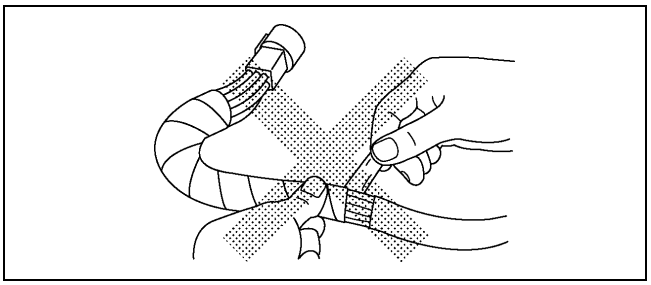

WGIWXX0040E

CONNECTORS

Disconnecting connectors

- When disconnecting connector, grasp the connectors, not the wires.

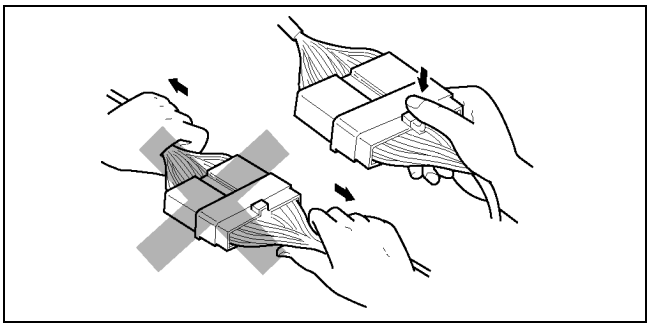

- Connectors can be disconnected by pressing or pulling the lock lever as shown.

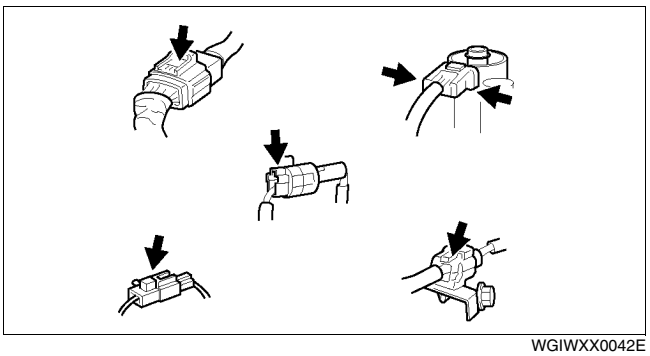

WGIWXX0042E

Locking connector

- When locking connectors, listen for a click indicating they are securely locked.

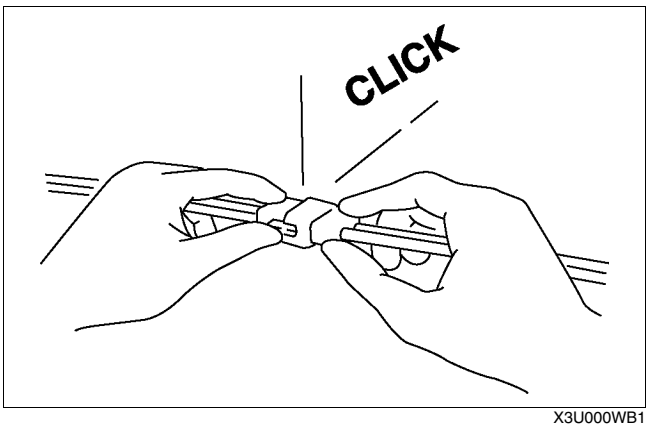

X3U000WB1

Inspection

- When a tester is used to inspect for continuity or measuring voltage, insert the tester probe from the wiring harness side.

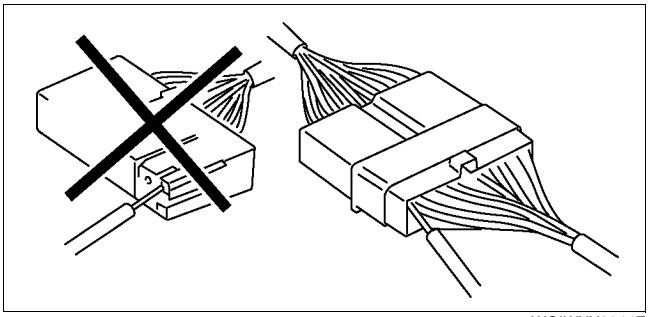

WGIWXX0044E

- Inspect the terminals of waterproof connectors from the connector side since they cannot be accessed from the wiring harness side.

  Caution
  - **To prevent damage to the terminal, wrap a thin wire around the tester probe before inserting into terminal.**

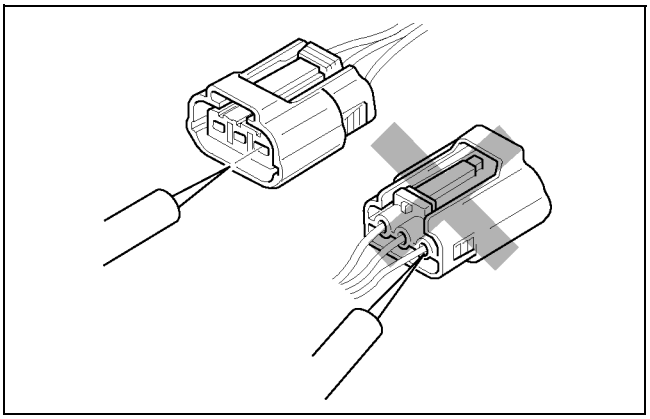

WGIWXX0045E

Terminals

Inspection

- Pull lightly on individual wires to verify that they are secured in the terminal.

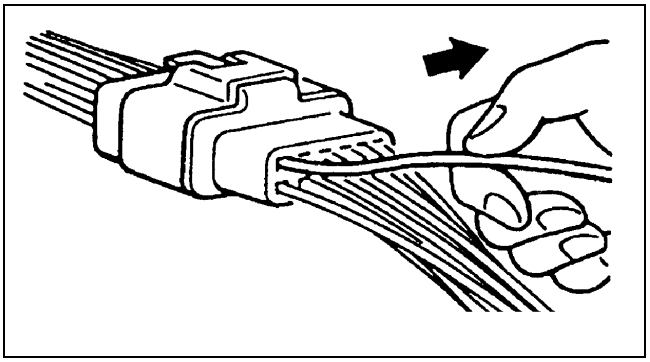

X3U000WB4

Replacement

- Use the appropriate tools to remove a terminal as shown. When installing a terminal, be sure to insert it until it locks securely.
- Insert a thin piece of metal from the terminal side of the connector and with the terminal locking tab pressed down, pull the terminal out from the connector.

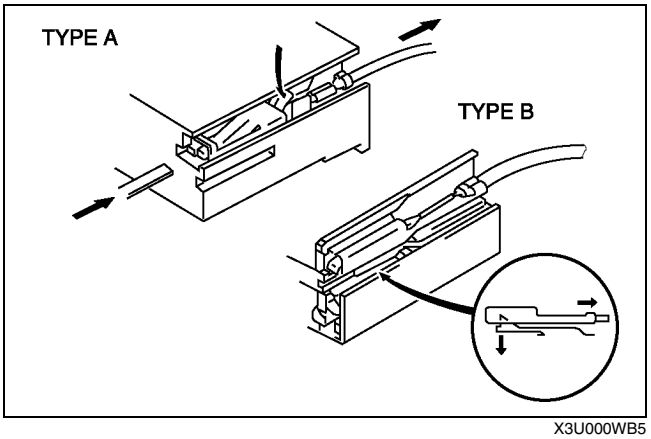

X3U000WB5

Sensors, Switches, and Relays

- Handle sensors, switches, and relays carefully. Do not drop them or strike them against other objects.

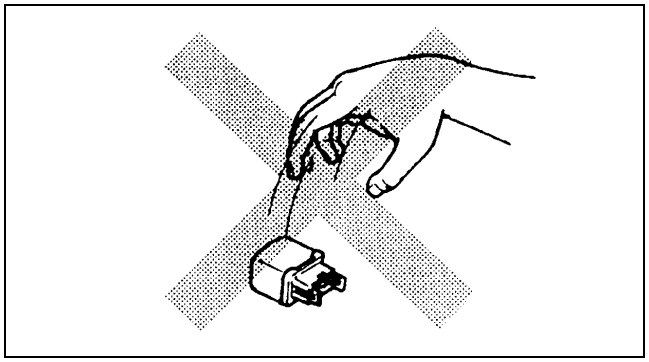

X3U000WB6

Fuse

Replacement

- When replacing a fuse, be sure to replace it with one of the same capacity. If a fuse fails again, the circuit probably has a short and the wiring should be inspected.
- Be sure the negative battery terminal is disconnected before replacing a main fuse.

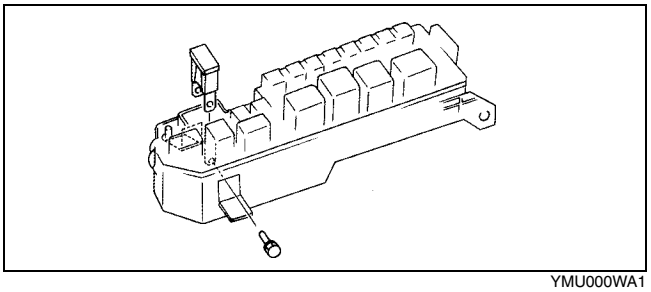

YMU000WA1

- When replacing a pullout fuse, use the fuse puller.

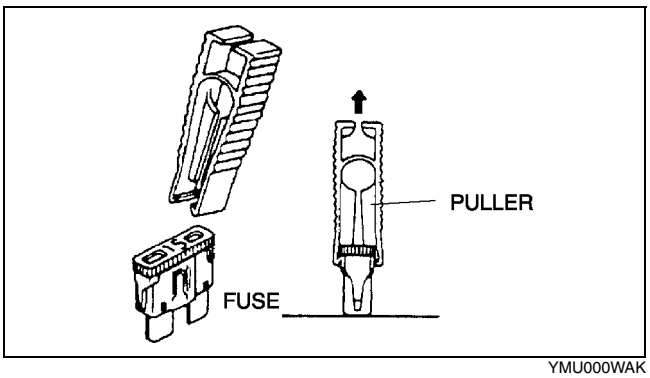

YMU000WAK

ELECTRICAL TROUBLESHOOTING TOOLS

Jumper wire

- A jumper wire is used to create a temporary circuit. Connect the jumper wire between the terminals of a circuit to bypass a switch.

  Caution
  - **Do not connect a jumper wire from the power source line to a body ground. This may cause burning or other damage to wiring harnesses or electronic components.**

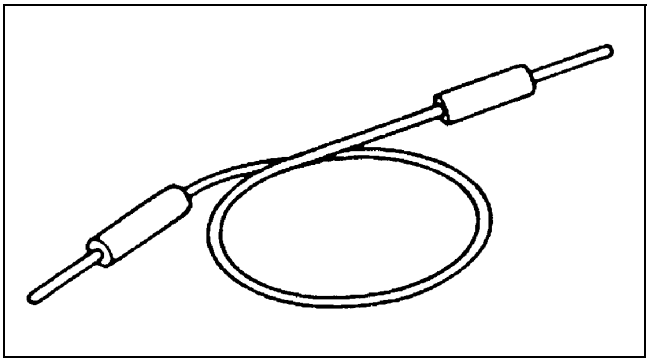
X3U000WBB

Voltmeter

- The DC voltmeter is used to measure circuit voltage. A voltmeter with a range of **15 V or more** is used by connecting the positive (+) probe (red lead wire) to the point where voltage will be measured and the negative (-) probe (black lead wire) to a body ground.

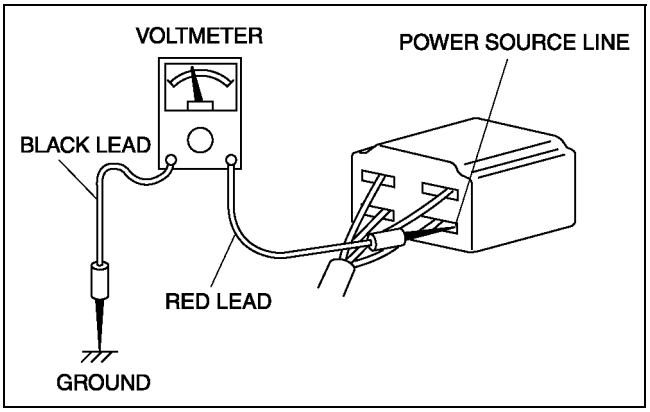

X3U000WBC

Ohmmeter

- The ohmmeter is used to measure the resistance between two points in a circuit and to inspect for continuity and short circuits.

  Caution
  - **Do not connect the ohmmeter to any circuit where voltage is applied. This will damage the ohmmeter.**

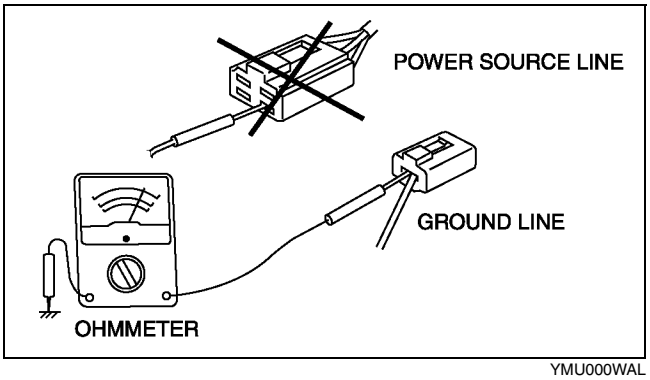

YMU000WAL

GROUND POINT

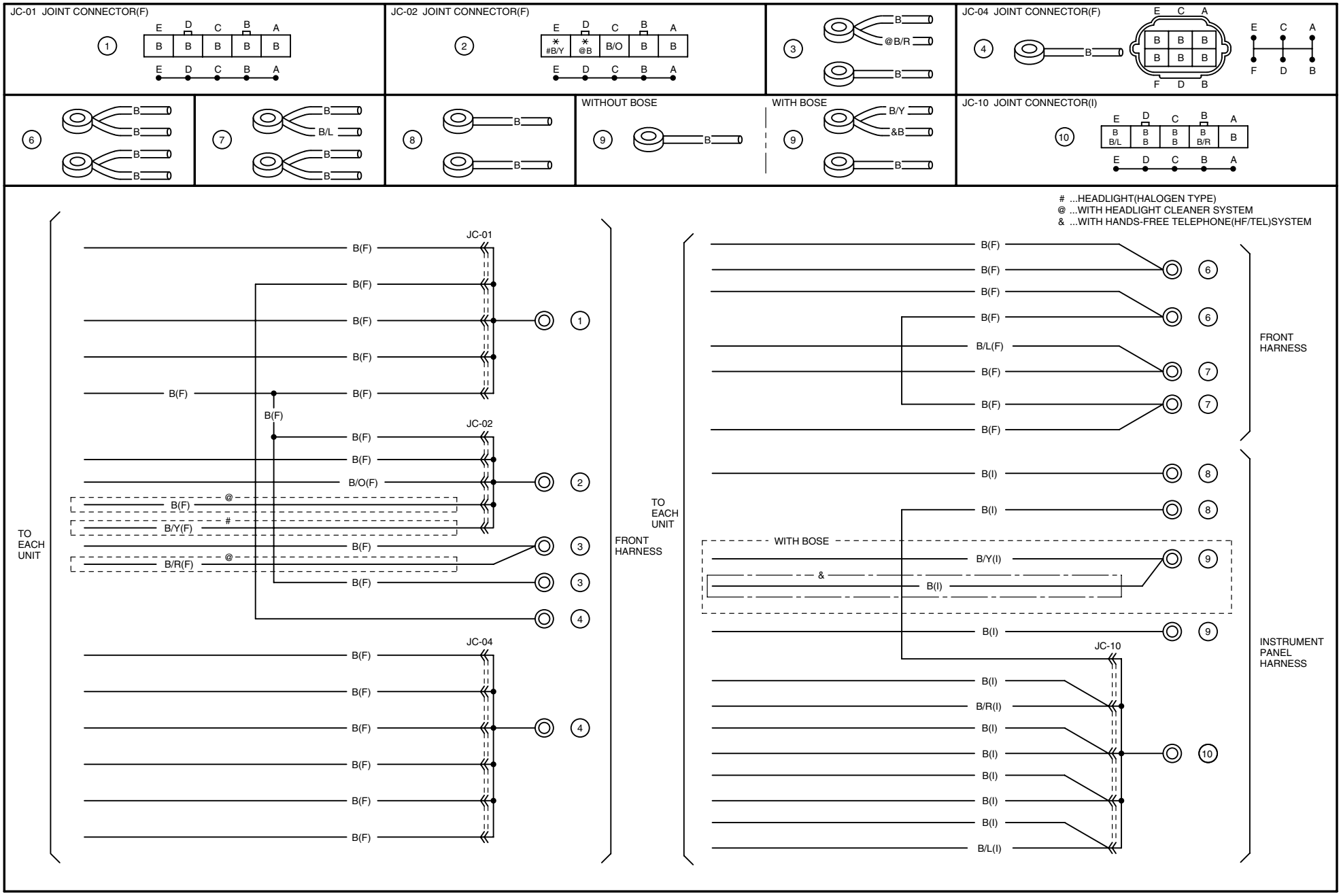

HARNESS SYMBOL: (F) (E) (R)

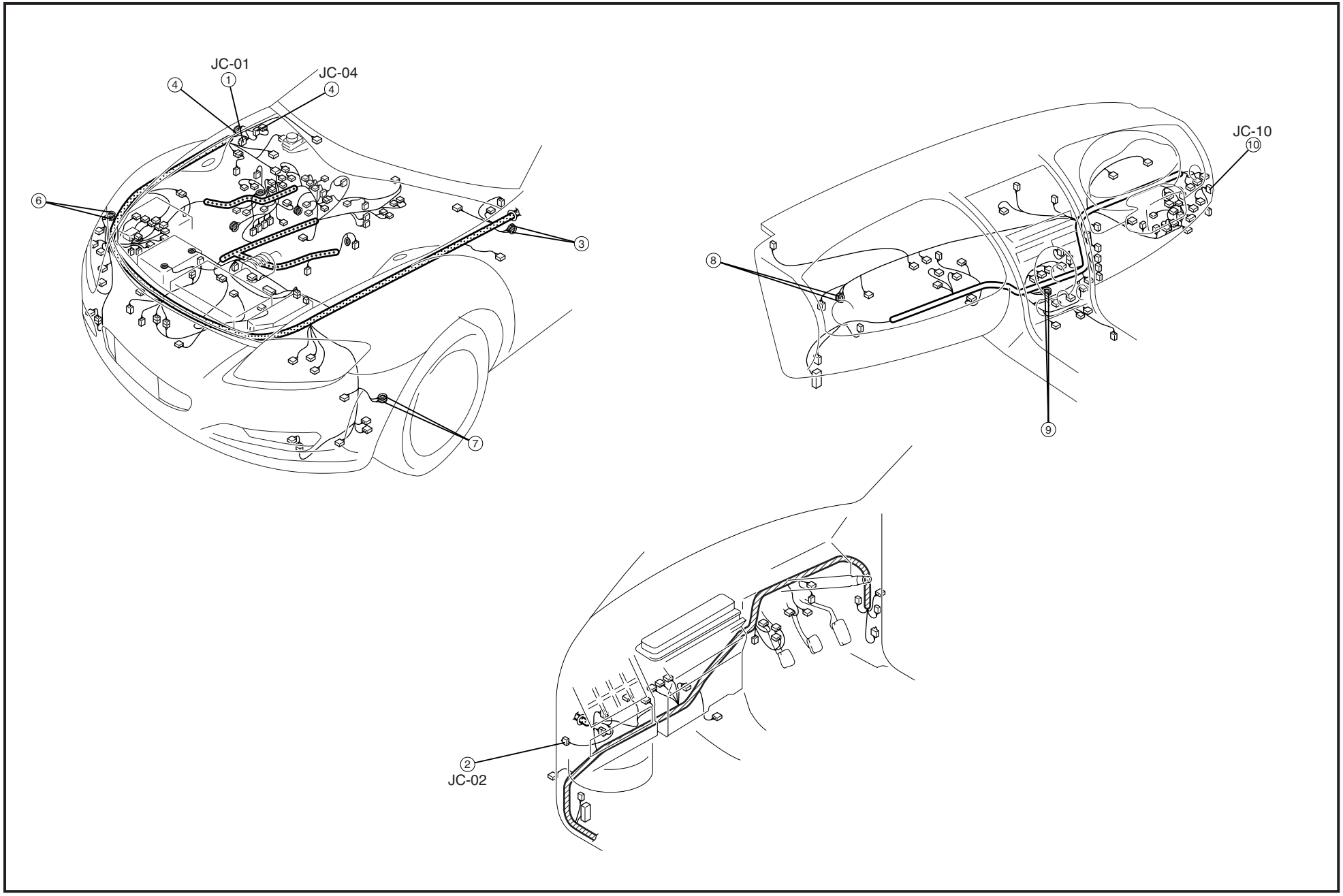

GROUND POINT

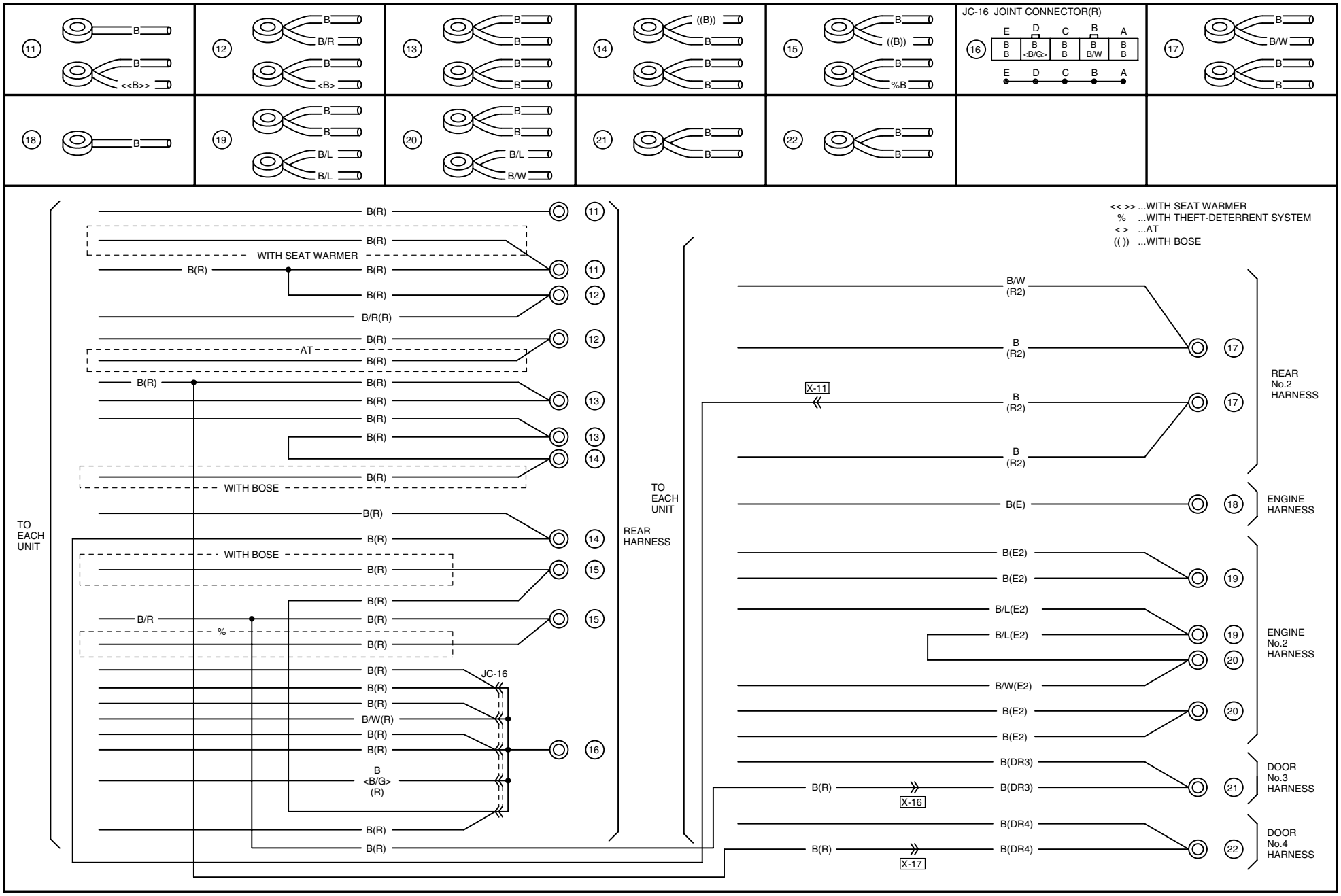

HARNESS SYMBOL: (F) (E) (R)

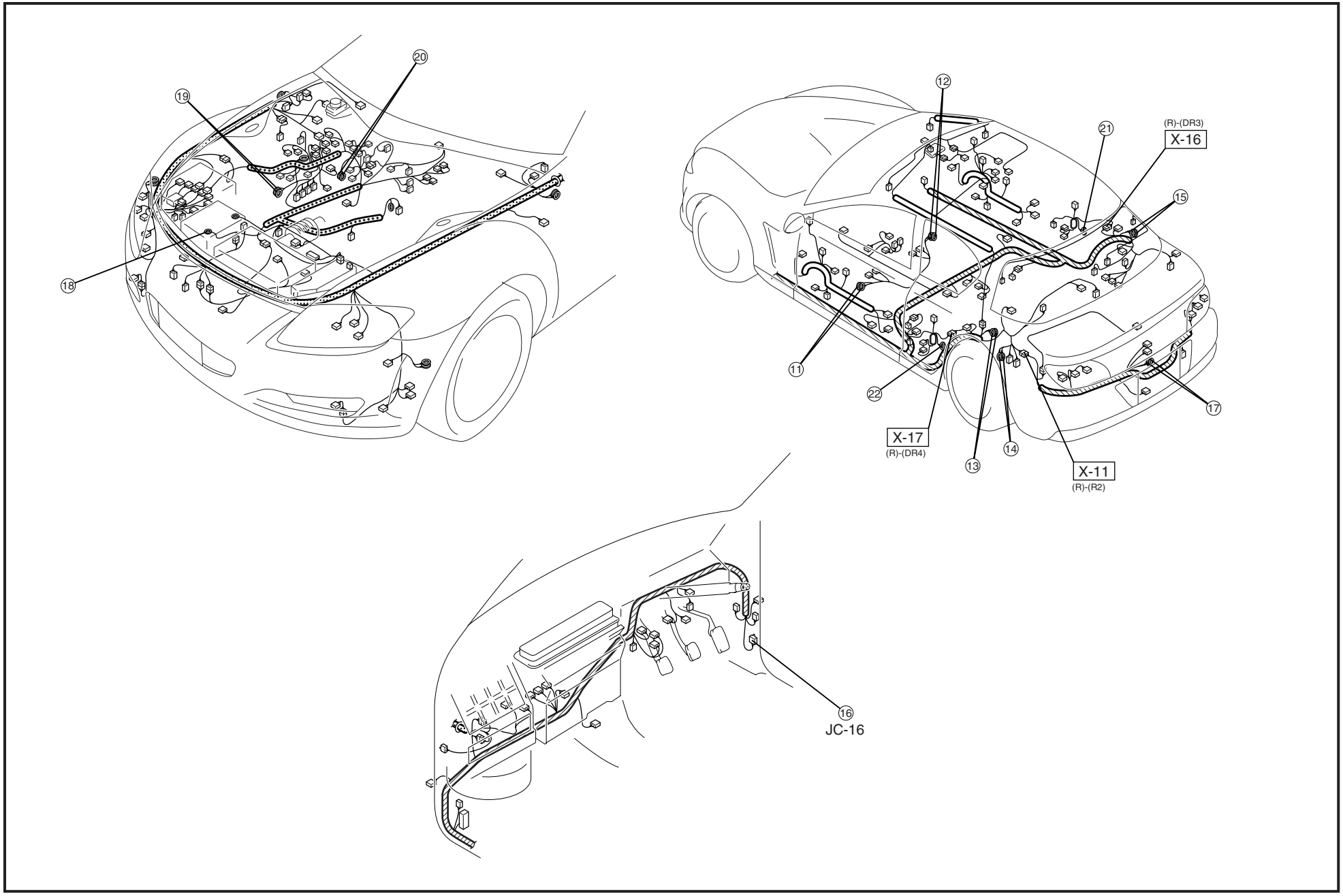

ELECTRICAL WIRING SCHEMATIC

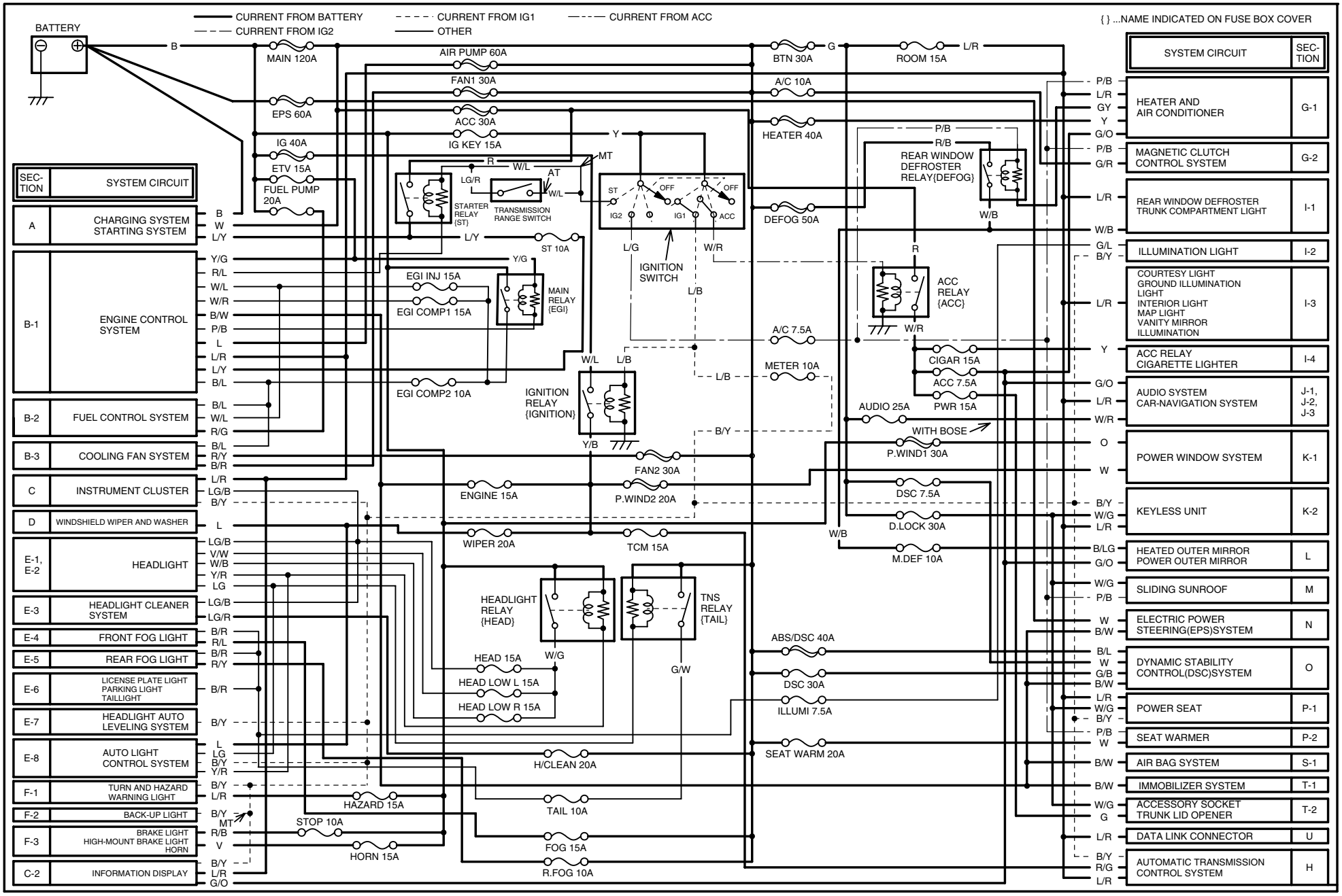

THIS PAGE INTENTIONALLY LEFT BLANK

CHARGING SYSTEM / STARTING SYSTEM

A

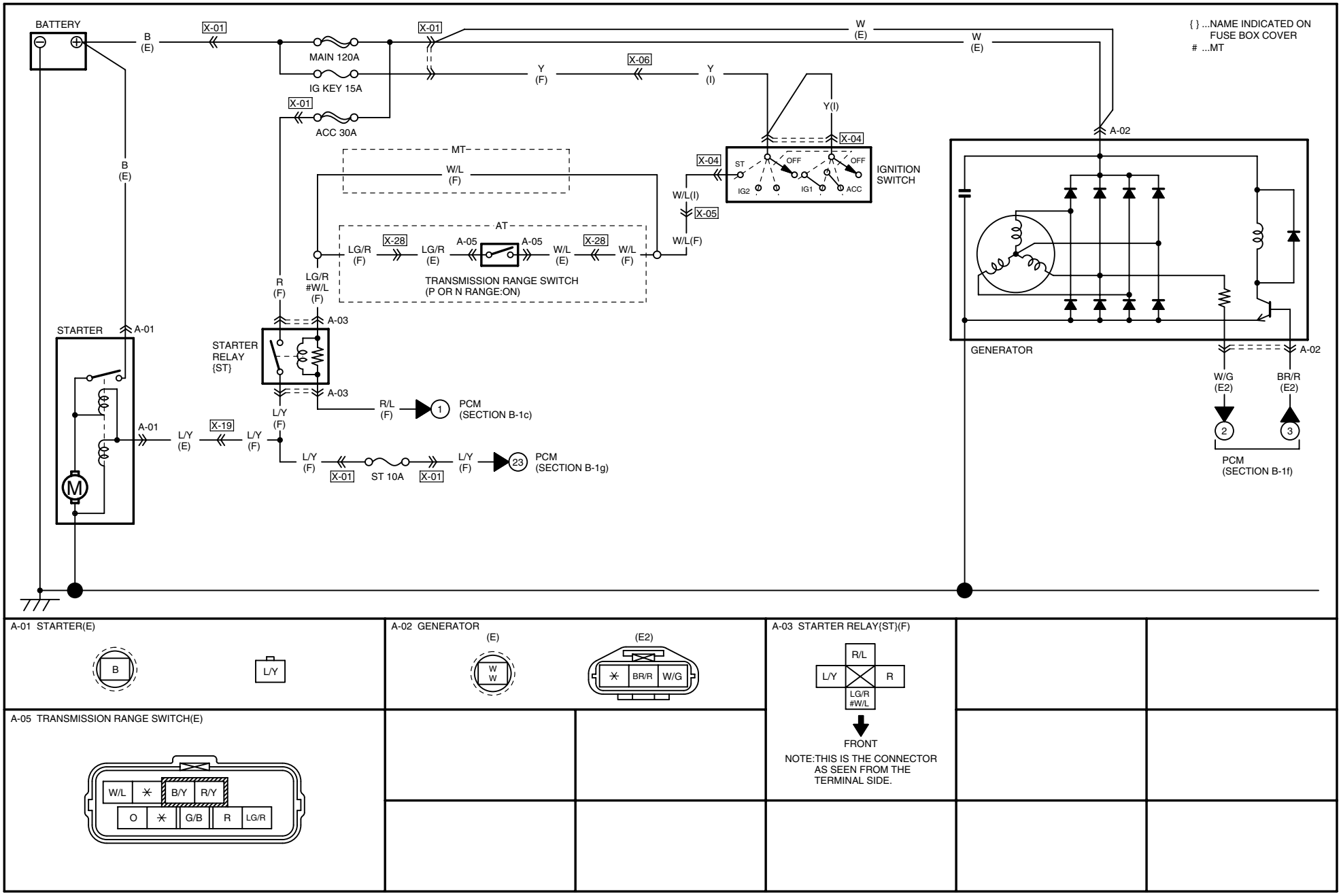

A-01 STARTER(E)

A-02 GENERATOR

A-03 STARTER RELAY{ST}(F)

NOTE:THIS IS THE CONNECTOR AS SEEN FROM THE TERMINAL SIDE.

A-05 TRANSMISSION RANGE SWITCH(E)

HARNESS SYMBOL: (F) (E) (R)

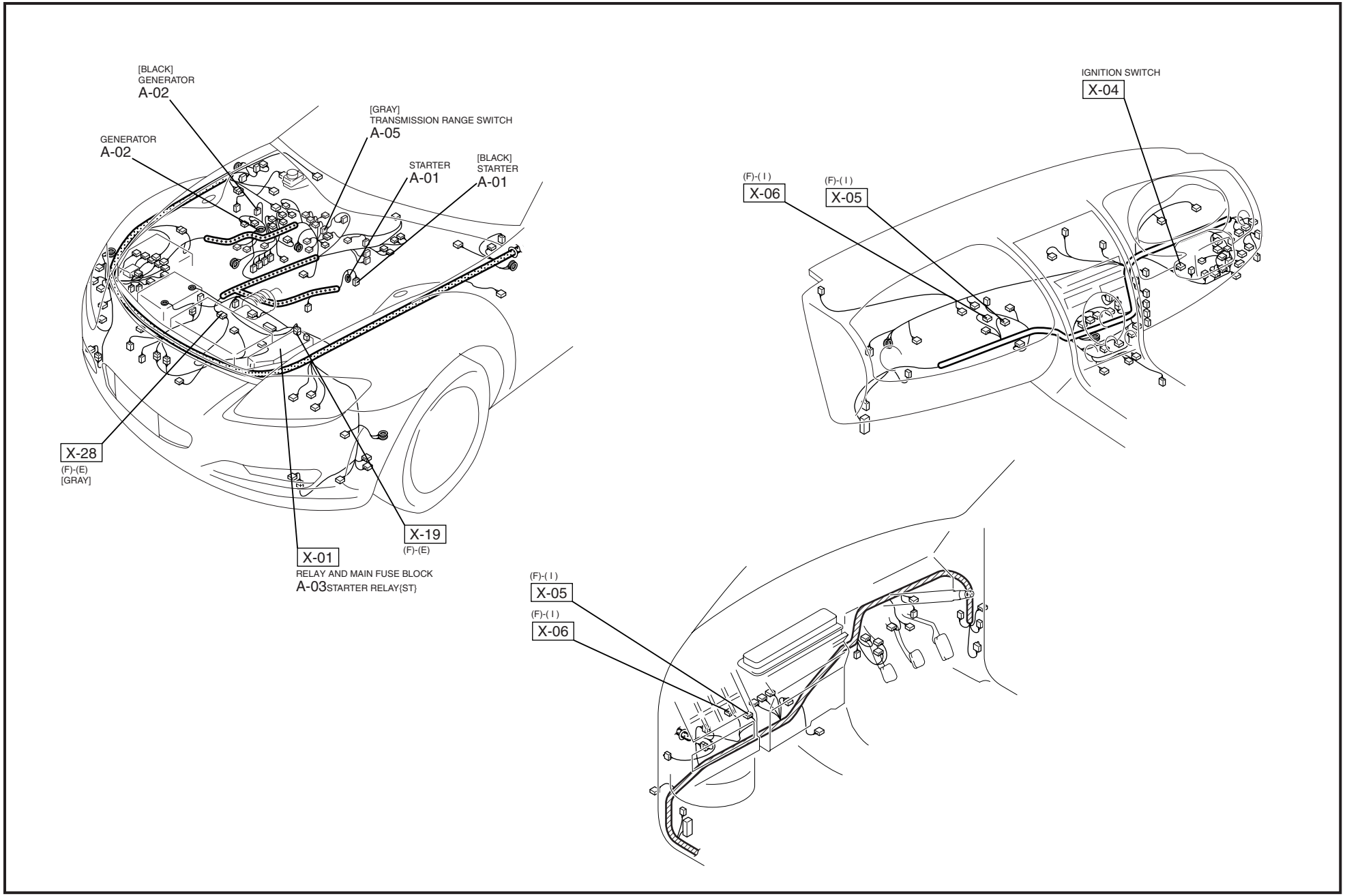

A

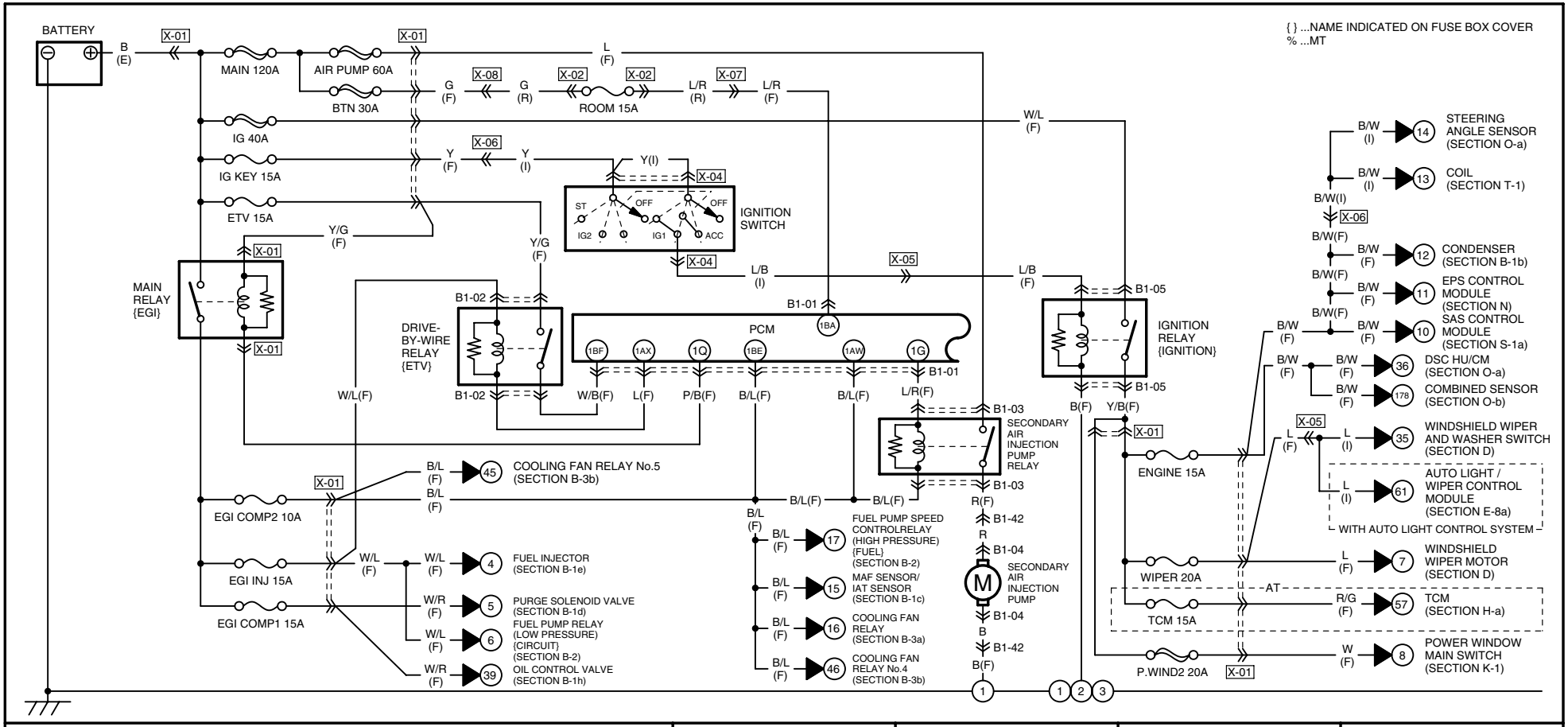
{ } ...NAME INDICATED ON FUSE BOX COVER
% ...MT
BATTERY
MAIN 120A
AIR PUMP 60A
BTN 30A
ROOM 15A
IG 40A
IG KEY 15A
ETV 15A
MAIN RELAY {EGI}
DRIVE-BY-WIRE RELAY {ETV}
IGNITION SWITCH
PCM
IGNITION RELAY {IGNITION}
SECONDARY AIR INJECTION PUMP RELAY
SECONDARY AIR INJECTION PUMP
EGI COMP2 10A
EGI INJ 15A
EGI COMP1 15A
ENGINE 15A
WIPER 20A
TCM 15A
P.WIND2 20A
COOLING FAN RELAY No.5 (SECTION B-3b)
FUEL INJECTOR (SECTION B-1e)
PURGE SOLENOID VALVE (SECTION B-1d)
FUEL PUMP RELAY (LOW PRESSURE) {CIRCUIT} (SECTION B-2)
OIL CONTROL VALVE (SECTION B-1h)
FUEL PUMP SPEED CONTROLRELAY (HIGH PRESSURE) {FUEL} (SECTION B-2)
MAF SENSOR/ IAT SENSOR (SECTION B-1c)
COOLING FAN RELAY (SECTION B-3a)
COOLING FAN RELAY No.4 (SECTION B-3b)
STEERING ANGLE SENSOR (SECTION O-a)
COIL (SECTION T-1)
CONDENSER (SECTION B-1b)
EPS CONTROL MODULE (SECTION N)
SAS CONTROL MODULE (SECTION S-1a)
DSC HU/CM (SECTION O-a)
COMBINED SENSOR (SECTION O-b)
WINDSHIELD WIPER AND WASHER SWITCH (SECTION D)
AUTO LIGHT / WIPER CONTROL MODULE (SECTION E-8a)
WITH AUTO LIGHT CONTROL SYSTEM
WINDSHIELD WIPER MOTOR (SECTION D)
TCM (SECTION H-a)
POWER WINDOW MAIN SWITCH (SECTION K-1)
AT

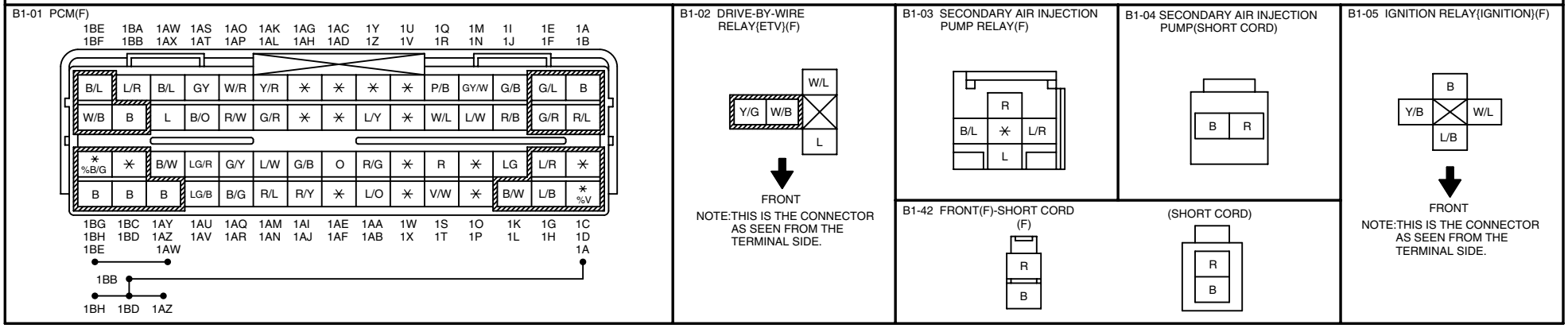
B1-01 PCM(F)
B1-02 DRIVE-BY-WIRE RELAY{ETV}(F)
FRONT
NOTE:THIS IS THE CONNECTOR AS SEEN FROM THE TERMINAL SIDE.
B1-03 SECONDARY AIR INJECTION PUMP RELAY(F)
B1-04 SECONDARY AIR INJECTION PUMP(SHORT CORD)
B1-05 IGNITION RELAY{IGNITION}(F)
B1-42 FRONT(F)-SHORT CORD (F)
(SHORT CORD)
FRONT
NOTE:THIS IS THE CONNECTOR AS SEEN FROM THE TERMINAL SIDE.

HARNESS SYMBOL: (F) (E) (R)

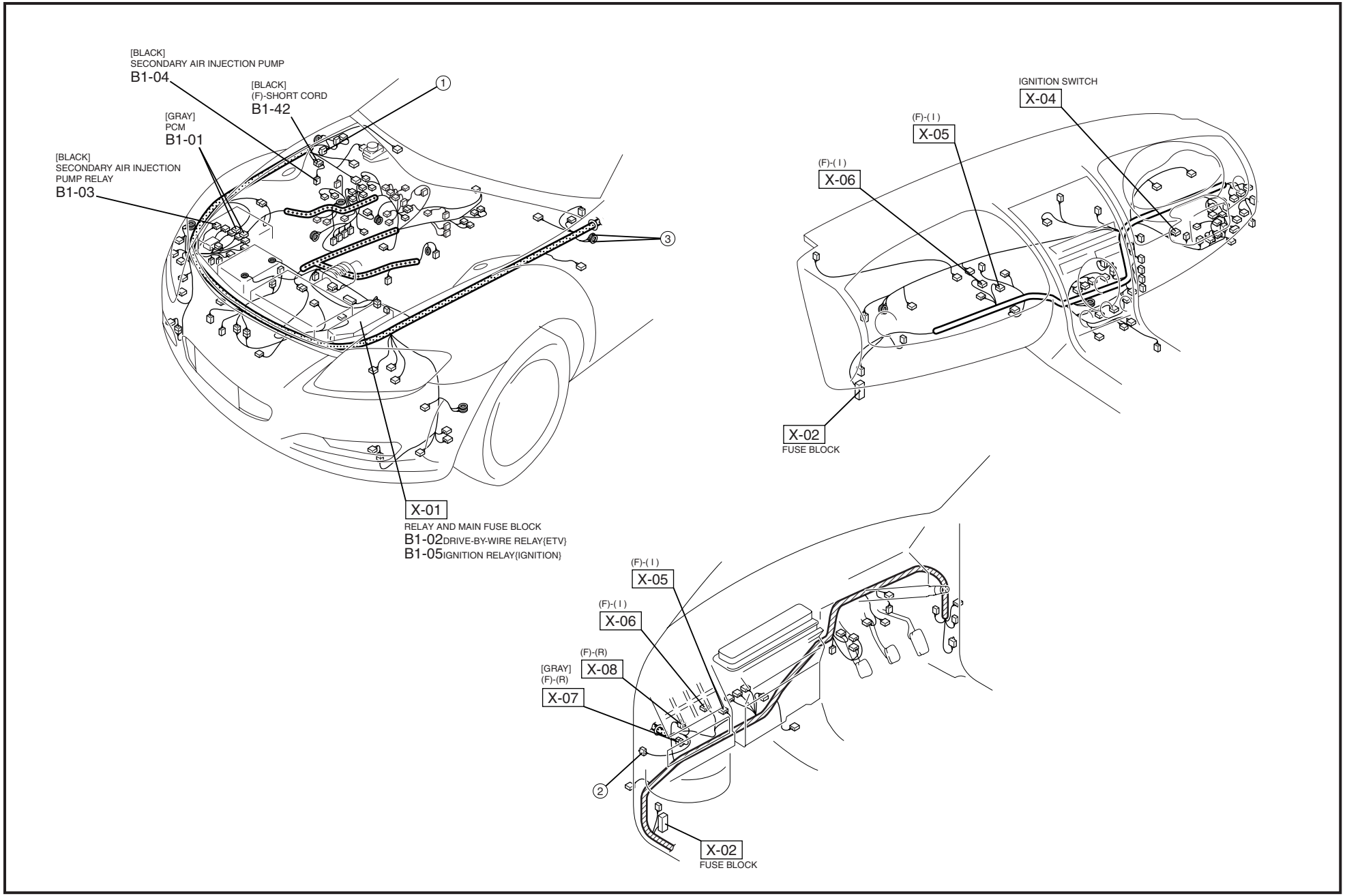

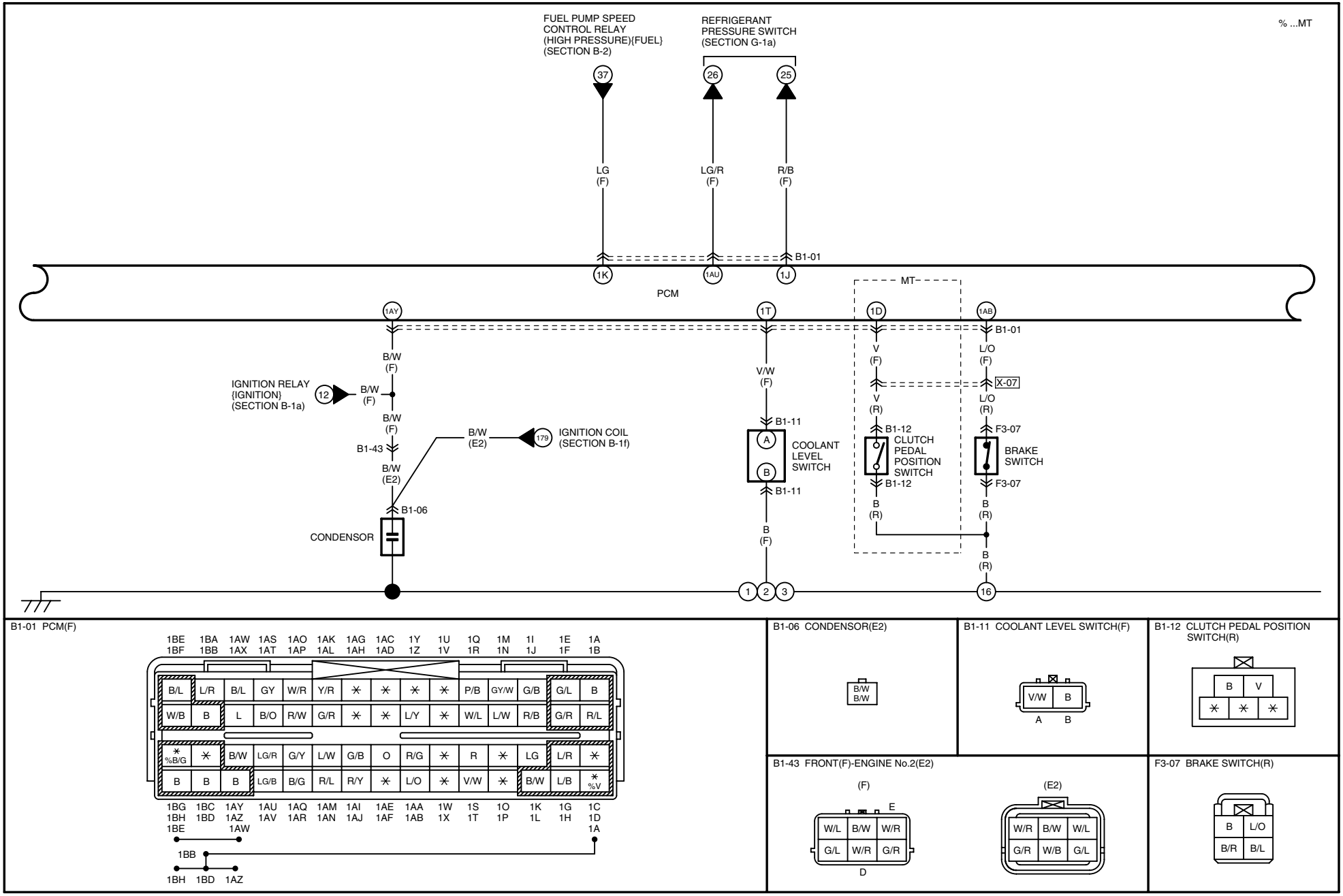
% ...MT
FUEL PUMP SPEED CONTROL RELAY (HIGH PRESSURE){FUEL} (SECTION B-2)
REFRIGERANT PRESSURE SWITCH (SECTION G-1a)
37
26
25
LG (F)
LG/R (F)
R/B (F)
B1-01
1K
1AU
1J
PCM
MT
1AY
1T
1D
1AB
B1-01
B/W (F)
V/W (F)
V (F)
L/O (F)
X-07
IGNITION RELAY {IGNITION} (SECTION B-1a)
12
B/W (F)
V (R)
L/O (R)
B/W (F)
B1-11
B1-12
F3-07
B1-43
B/W (E2)
179
IGNITION COIL (SECTION B-1f)
A
COOLANT LEVEL SWITCH
CLUTCH PEDAL POSITION SWITCH
BRAKE SWITCH
B/W (E2)
B
B1-12
F3-07
B1-11
B1-06
B (R)
B (R)
CONDENSOR
B (F)
B (R)
1
2
3
16
B1-01 PCM(F)
1BE 1BA 1AW 1AS 1AO 1AK 1AG 1AC 1Y 1U 1Q 1M 1I 1E 1A
1BF 1BB 1AX 1AT 1AP 1AL 1AH 1AD 1Z 1V 1R 1N 1J 1F 1B
B/L L/R B/L GY W/R Y/R P/B GY/W G/B G/L B
W/B B L B/O R/W G/R L/Y W/L L/W R/B G/R R/L
%B/G B/W LG/R G/Y L/W G/B O R/G R L LG L/R
B B B LG/B B/G R/L R/Y L/O V/W B/W L/B %V
1BG 1BC 1AY 1AU 1AQ 1AM 1AI 1AE 1AA 1W 1S 1O 1K 1G 1C
1BH 1BD 1AZ 1AV 1AR 1AN 1AJ 1AF 1AB 1X 1T 1P 1L 1H 1D
1BE 1AW 1A
1BB
1BH 1BD 1AZ
B1-06 CONDENSOR(E2)
B/W B/W
B1-11 COOLANT LEVEL SWITCH(F)
V/W B
A B
B1-12 CLUTCH PEDAL POSITION SWITCH(R)
B V
B1-43 FRONT(F)-ENGINE No.2(E2)
(F)
(E2)
E
W/L B/W W/R
G/L W/R G/R
D
W/R B/W W/L
G/R W/B G/L
F3-07 BRAKE SWITCH(R)
B L/O
B/R B/L

HARNESS SYMBOL: (F) (E) (R)

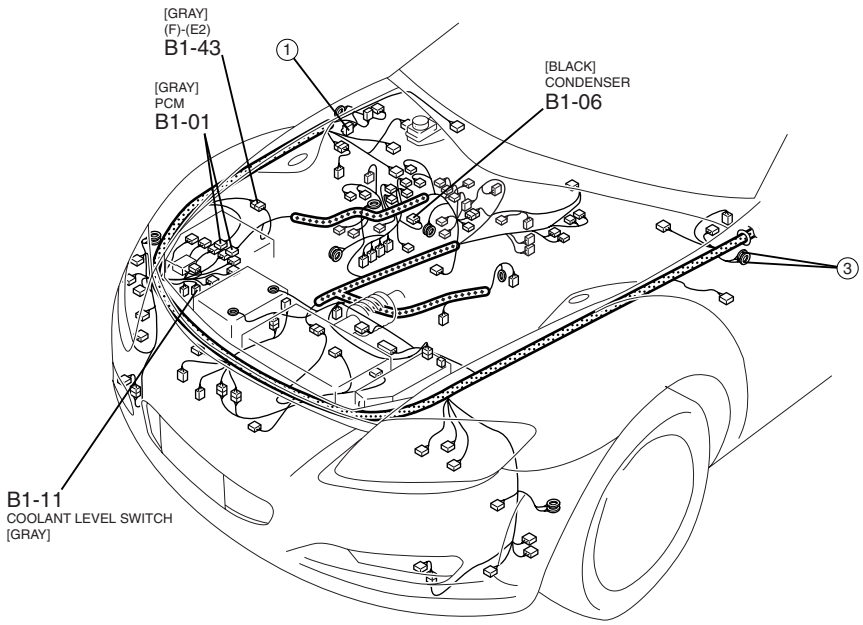

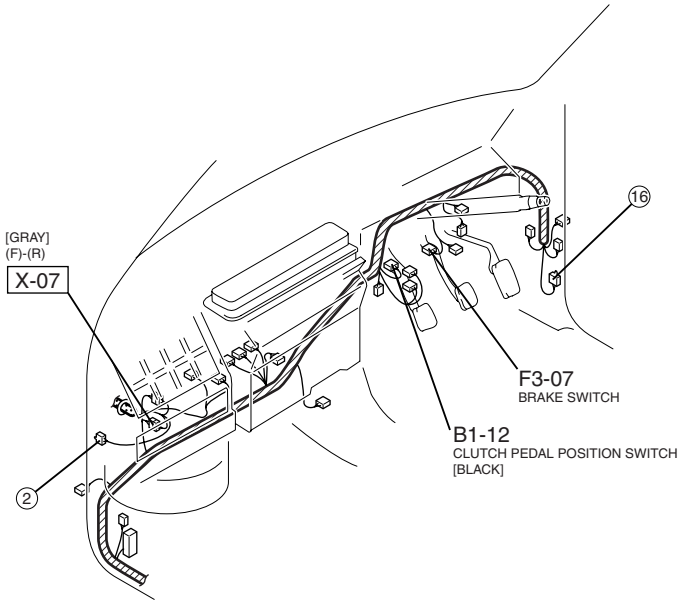

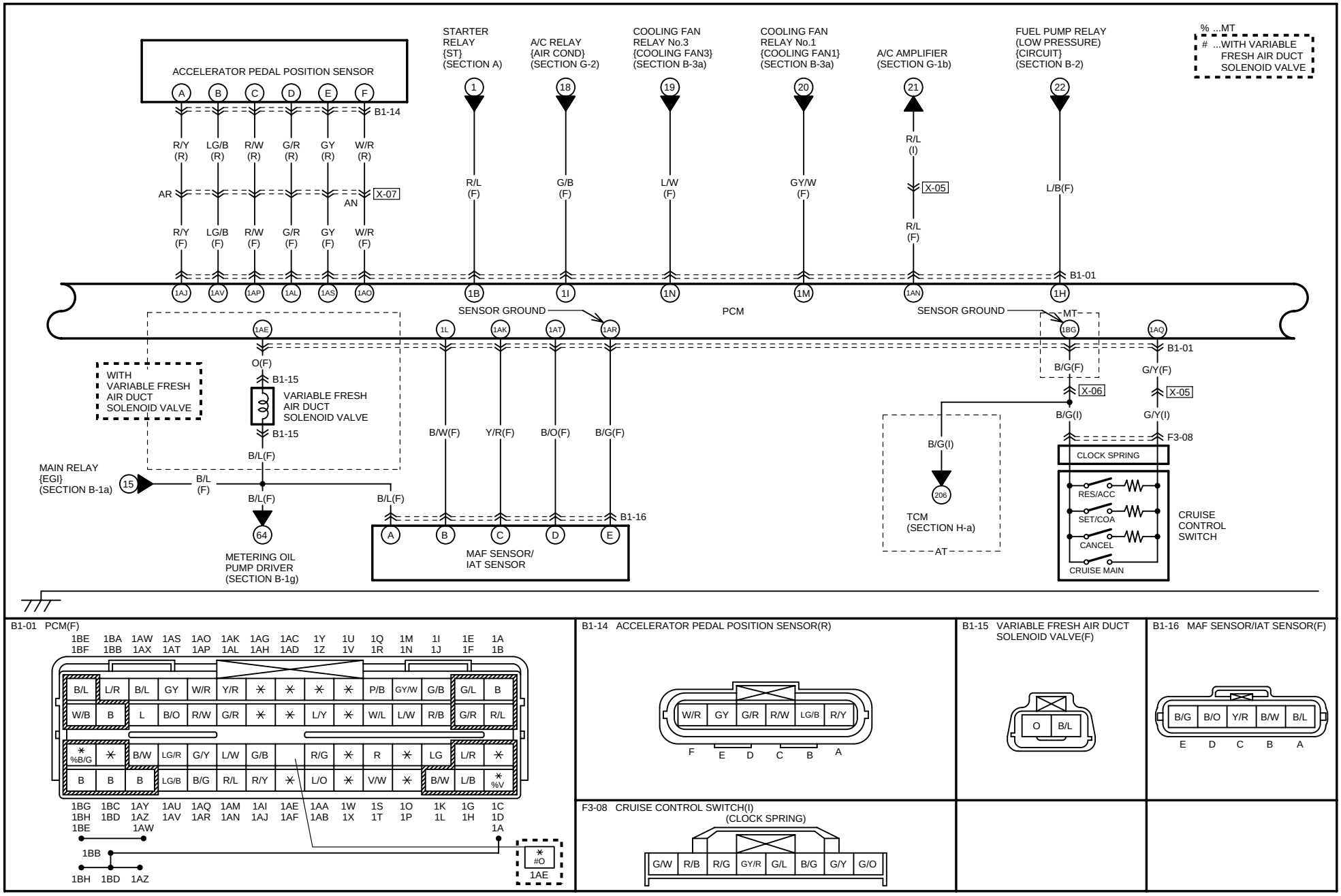
ACCELERATOR PEDAL POSITION SENSOR
A B C D E F
B1-14
R/Y (R) LG/B (R) R/W (R) G/R (R) GY (R) W/R (R)
AR
X-07
AN
R/Y (F) LG/B (F) R/W (F) G/R (F) GY (F) W/R (F)
1AJ 1AV 1AP 1AL 1AS 1AO
STARTER RELAY {ST} (SECTION A)
1
R/L (F)
1B
A/C RELAY {AIR COND} (SECTION G-2)
18
G/B (F)
1I
COOLING FAN RELAY No.3 {COOLING FAN3} (SECTION B-3a)
19
L/W (F)
1N
COOLING FAN RELAY No.1 {COOLING FAN1} (SECTION B-3a)
20
GY/W (F)
1M
A/C AMPLIFIER (SECTION G-1b)
21
R/L (I)
X-05
R/L (F)
1AN
FUEL PUMP RELAY (LOW PRESSURE) {CIRCUIT} (SECTION B-2)
22
L/B(F)
B1-01
1H
% ...MT
# ...WITH VARIABLE FRESH AIR DUCT SOLENOID VALVE
PCM
SENSOR GROUND
1AE 1L 1AK 1AT 1AR
SENSOR GROUND
MT
1BG
1AQ
B1-01
O(F)
B1-15
WITH VARIABLE FRESH AIR DUCT SOLENOID VALVE
VARIABLE FRESH AIR DUCT SOLENOID VALVE
B1-15
B/L(F)
B/W(F) Y/R(F) B/O(F) B/G(F)
B/G(F)
X-06
G/Y(F)
X-05
B/G(I)
G/Y(I)
F3-08
CLOCK SPRING
RES/ACC
SET/COA
CANCEL
CRUISE MAIN
CRUISE CONTROL SWITCH
B/G(I)
206
TCM (SECTION H-a)
AT
MAIN RELAY {EGI} (SECTION B-1a)
15
B/L (F)
B/L(F)
B/L(F)
64
METERING OIL PUMP DRIVER (SECTION B-1g)
B1-16
A B C D E
MAF SENSOR/ IAT SENSOR
B1-01 PCM(F)
1BE 1BA 1AW 1AS 1AO 1AK 1AG 1AC 1Y 1U 1Q 1M 1I 1E 1A
1BF 1BB 1AX 1AT 1AP 1AL 1AH 1AD 1Z 1V 1R 1N 1J 1F 1B
B/L L/R B/L GY W/R Y/R P/B GY/W G/B G/L B
W/B B L B/O R/W G/R L/Y W/L L/W R/B G/R R/L
%B/G B/W LG/R G/Y L/W G/B R/G R L LG L/R
B B B LG/B B/G R/L R/Y L/O V/W B/W L/B %V
1BG 1BC 1AY 1AU 1AQ 1AM 1AI 1AE 1AA 1W 1S 1O 1K 1G 1C
1BH 1BD 1AZ 1AV 1AR 1AN 1AJ 1AF 1AB 1X 1T 1P 1L 1H 1D
1BE 1AW 1A
1BB
1BH 1BD 1AZ
#O
1AE
B1-14 ACCELERATOR PEDAL POSITION SENSOR(R)
W/R GY G/R R/W LG/B R/Y
F E D C B A
B1-15 VARIABLE FRESH AIR DUCT SOLENOID VALVE(F)
O B/L
B1-16 MAF SENSOR/IAT SENSOR(F)
B/G B/O Y/R B/W B/L
E D C B A
F3-08 CRUISE CONTROL SWITCH(I) (CLOCK SPRING)
G/W R/B R/G GY/R G/L B/G G/Y G/O

HARNESS SYMBOL: (F) (E) (R)

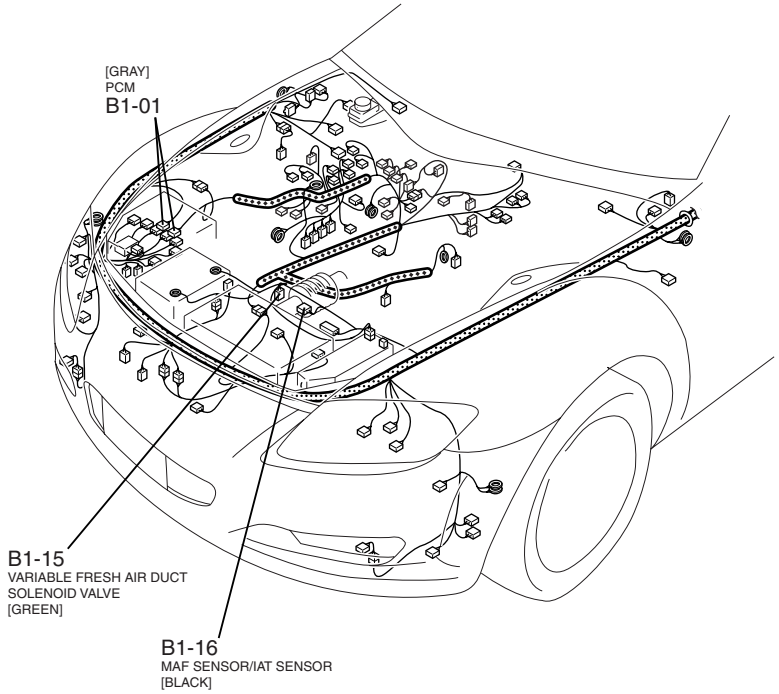

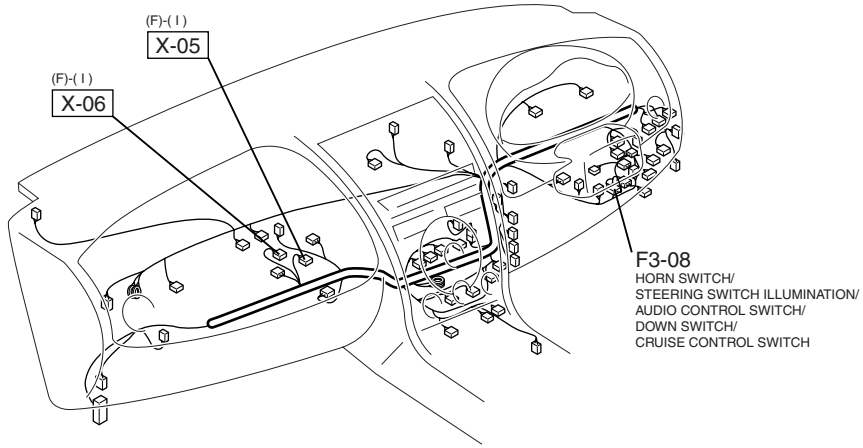

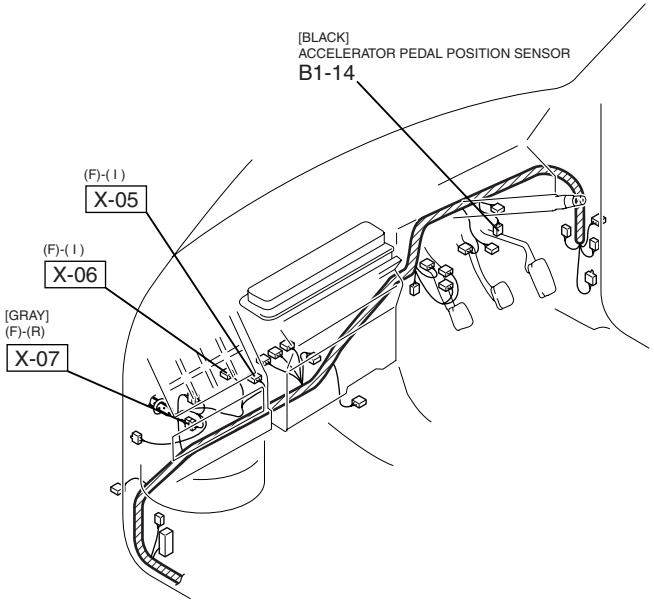

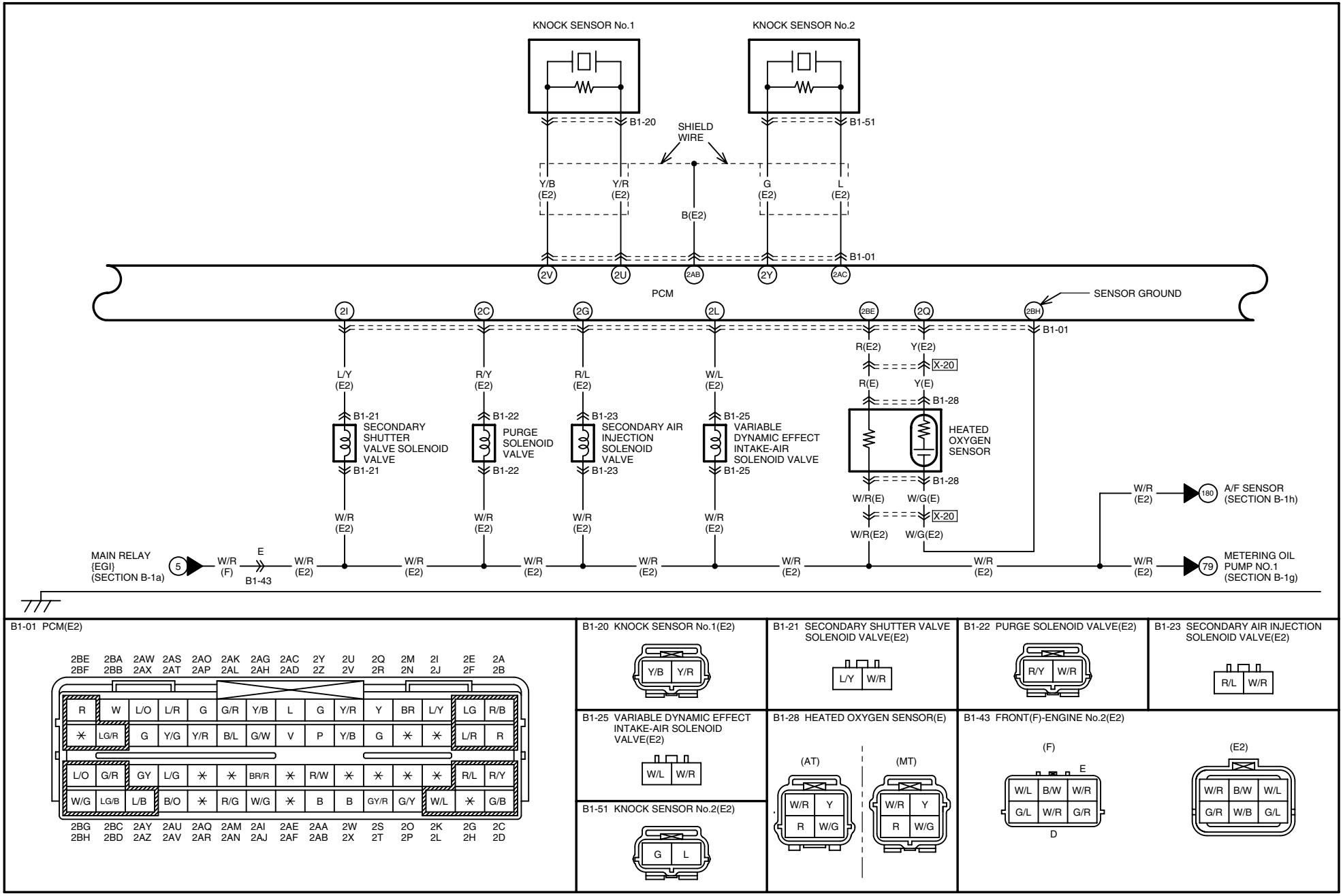
KNOCK SENSOR No.1
KNOCK SENSOR No.2
B1-20
B1-51
SHIELD WIRE
Y/B (E2)
Y/R (E2)
B(E2)
G (E2)
L (E2)
B1-01
2V
2U
2AB
2Y
2AC
PCM
SENSOR GROUND
2I
2C
2G
2L
2BE
2Q
2BH
B1-01
R(E2)
Y(E2)
X-20
R(E)
Y(E)
B1-28
L/Y (E2)
R/Y (E2)
R/L (E2)
W/L (E2)
B1-21
SECONDARY SHUTTER VALVE SOLENOID VALVE
B1-22
PURGE SOLENOID VALVE
B1-23
SECONDARY AIR INJECTION SOLENOID VALVE
B1-25
VARIABLE DYNAMIC EFFECT INTAKE-AIR SOLENOID VALVE
HEATED OXYGEN SENSOR
W/R(E)
W/G(E)
W/R (E2)
W/R(E2)
W/G(E2)
180
A/F SENSOR (SECTION B-1h)
MAIN RELAY {EGI} (SECTION B-1a)
5
W/R (F)
E
B1-43
79
METERING OIL PUMP NO.1 (SECTION B-1g)
B1-01 PCM(E2)
2BE 2BA 2AW 2AS 2AO 2AK 2AG 2AC 2Y 2U 2Q 2M 2I 2E 2A
2BF 2BB 2AX 2AT 2AP 2AL 2AH 2AD 2Z 2V 2R 2N 2J 2F 2B
R W L/O L/R G G/R Y/B L G Y/R Y BR L/Y LG R/B
LG/R G Y/G Y/R B/L G/W V P Y/B G L/R R
L/O G/R GY L/G BR/R R/W R/L R/Y
W/G LG/B L/B B/O R/G W/G B B GY/R G/Y W/L G/B
2BG 2BC 2AY 2AU 2AQ 2AM 2AI 2AE 2AA 2W 2S 2O 2K 2G 2C
2BH 2BD 2AZ 2AV 2AR 2AN 2AJ 2AF 2AB 2X 2T 2P 2L 2H 2D
B1-20 KNOCK SENSOR No.1(E2)
Y/B Y/R
B1-21 SECONDARY SHUTTER VALVE SOLENOID VALVE(E2)
L/Y W/R
B1-22 PURGE SOLENOID VALVE(E2)
R/Y W/R
B1-23 SECONDARY AIR INJECTION SOLENOID VALVE(E2)
R/L W/R
B1-25 VARIABLE DYNAMIC EFFECT INTAKE-AIR SOLENOID VALVE(E2)
W/L W/R
B1-28 HEATED OXYGEN SENSOR(E)
(AT)
(MT)
W/R Y
R W/G
B1-43 FRONT(F)-ENGINE No.2(E2)
(F)
(E2)
E
W/L B/W W/R
G/L W/R G/R
D
W/R B/W W/L
G/R W/B G/L
B1-51 KNOCK SENSOR No.2(E2)
G L

HARNESS SYMBOL: (F) (E) (R)

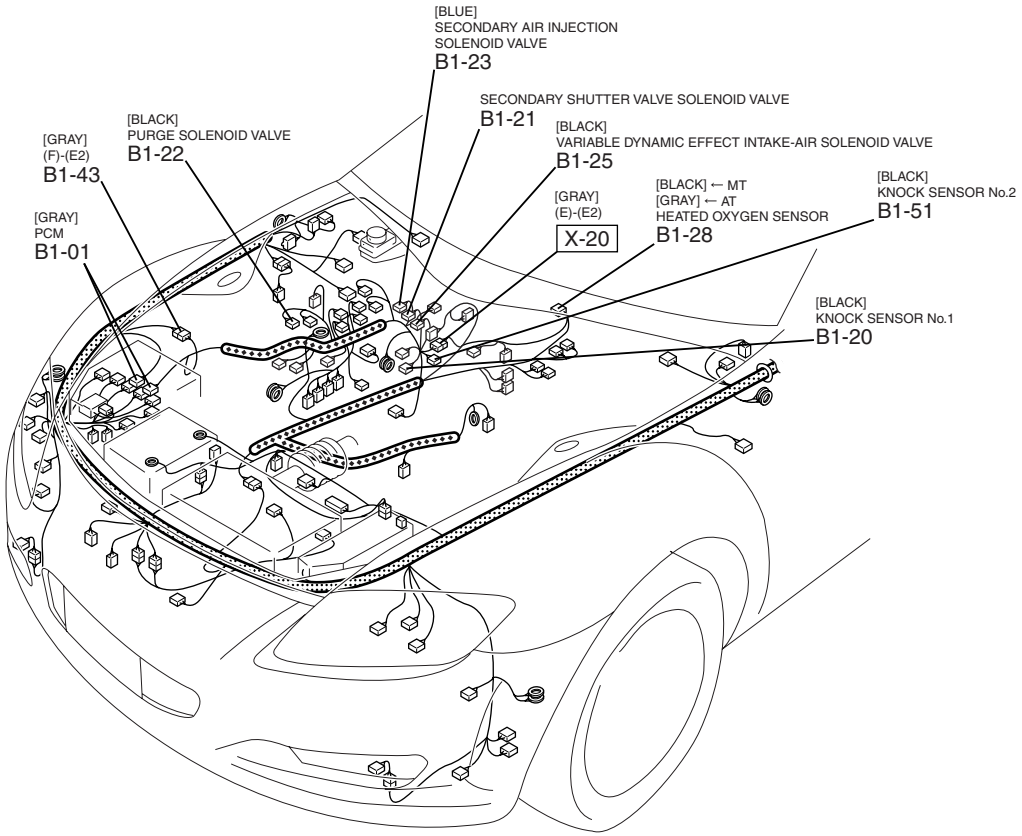

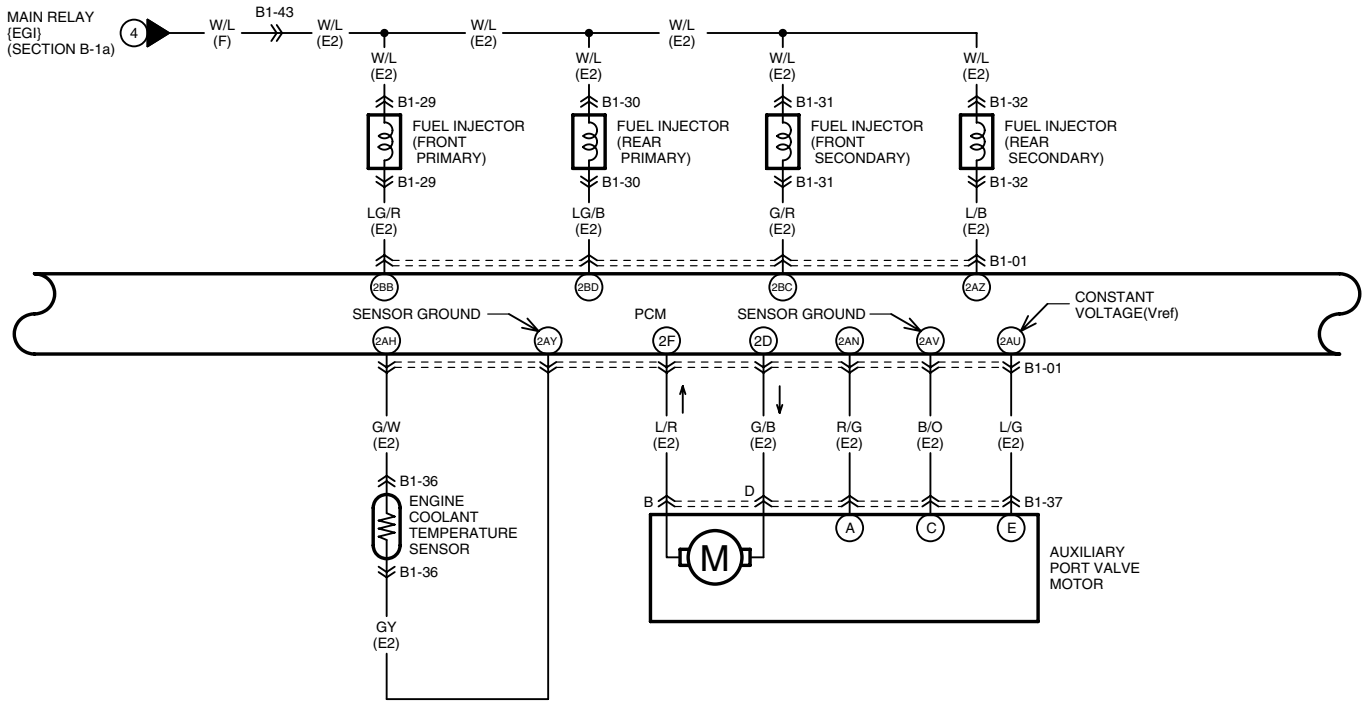

B1-01 PCM(E2)

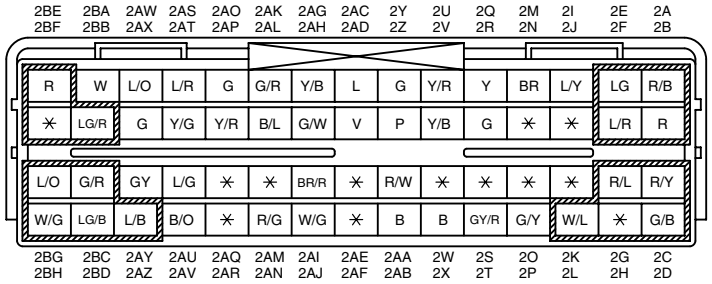

B1-29 FUEL INJECTOR (FRONT PRIMARY)(E2)

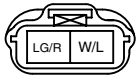

B1-30 FUEL INJECTOR (REAR PRIMARY)(E2)

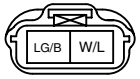

B1-31 FUEL INJECTOR (FRONT SECONDARY)(E2)

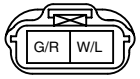

B1-32 FUEL INJECTOR (REAR SECONDARY)(E2)

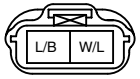

B1-36 ENGINE COOLANT TEMPERATURE SENSOR(E2)

B1-37 AUXILIARY PORT VALVE MOTOR(E2)

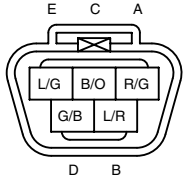

B1-43 FRONT(F)-ENGINE No.2(E2)

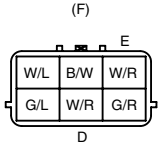

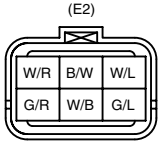

HARNESS SYMBOL: (F) (E) (R)

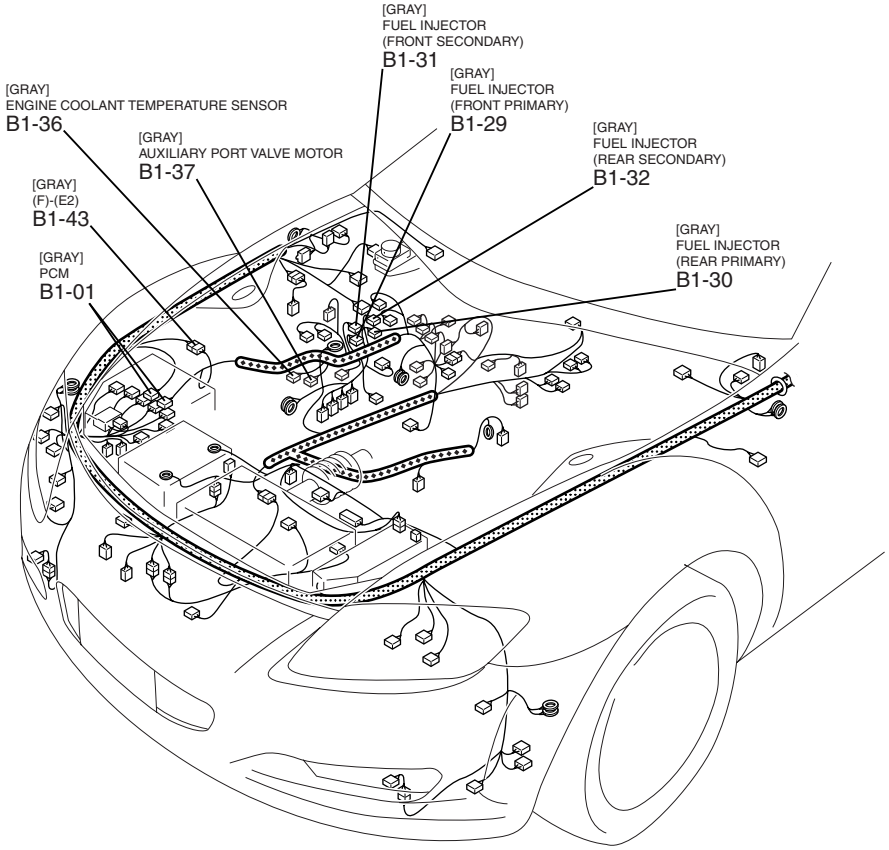

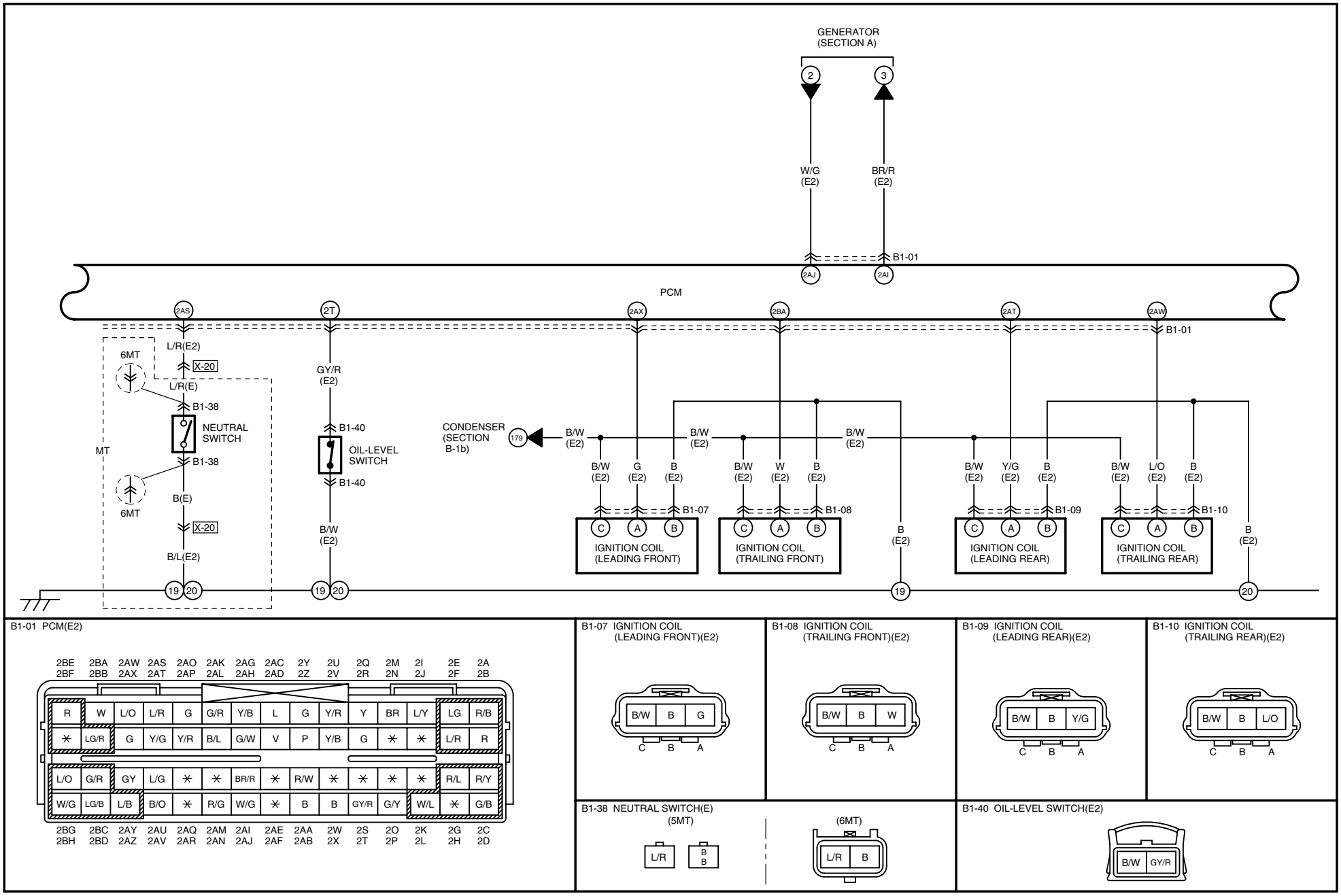
GENERATOR
(SECTION A)
2
3
W/G
(E2)
BR/R
(E2)
B1-01
2AJ
2AI
PCM
2AS
2T
2AX
2BA
2AT
2AW
B1-01
6MT
L/R(E2)
X-20
L/R(E)
B1-38
NEUTRAL
SWITCH
MT
B1-38
6MT
B(E)
X-20
B/L(E2)
19
20
GY/R
(E2)
B1-40
OIL-LEVEL
SWITCH
B1-40
B/W
(E2)
CONDENSER
(SECTION
B-1b)
179
B/W
(E2)
B/W
(E2)
B/W
(E2)
B/W
(E2)
G
(E2)
B
(E2)
B/W
(E2)
W
(E2)
B
(E2)
B/W
(E2)
Y/G
(E2)
B
(E2)
B/W
(E2)
L/O
(E2)
B
(E2)
B1-07
B1-08
B1-09
B1-10
C
A
B
IGNITION COIL
(LEADING FRONT)
IGNITION COIL
(TRAILING FRONT)
IGNITION COIL
(LEADING REAR)
IGNITION COIL
(TRAILING REAR)
B
(E2)
B
(E2)
19
20
B1-01 PCM(E2)
2BE 2BA 2AW 2AS 2AO 2AK 2AG 2AC 2Y 2U 2Q 2M 2I 2E 2A
2BF 2BB 2AX 2AT 2AP 2AL 2AH 2AD 2Z 2V 2R 2N 2J 2F 2B
R W L/O L/R G G/R Y/B L G Y/R Y BR L/Y LG R/B
LG/R G Y/G Y/R B/L G/W V P Y/B G L/R R
L/O G/R GY L/G BR/R R/W R/L R/Y
W/G LG/B L/B B/O R/G W/G B B GY/R G/Y W/L G/B
2BG 2BC 2AY 2AU 2AQ 2AM 2AI 2AE 2AA 2W 2S 2O 2K 2G 2C
2BH 2BD 2AZ 2AV 2AR 2AN 2AJ 2AF 2AB 2X 2T 2P 2L 2H 2D
B1-07 IGNITION COIL
(LEADING FRONT)(E2)
B/W B G
C B A
B1-08 IGNITION COIL
(TRAILING FRONT)(E2)
B/W B W
C B A
B1-09 IGNITION COIL
(LEADING REAR)(E2)
B/W B Y/G
C B A
B1-10 IGNITION COIL
(TRAILING REAR)(E2)
B/W B L/O
C B A
B1-38 NEUTRAL SWITCH(E)
(5MT)
L/R
B
B
(6MT)
L/R B
B1-40 OIL-LEVEL SWITCH(E2)
B/W GY/R

HARNESS SYMBOL: (F) (E) (R)

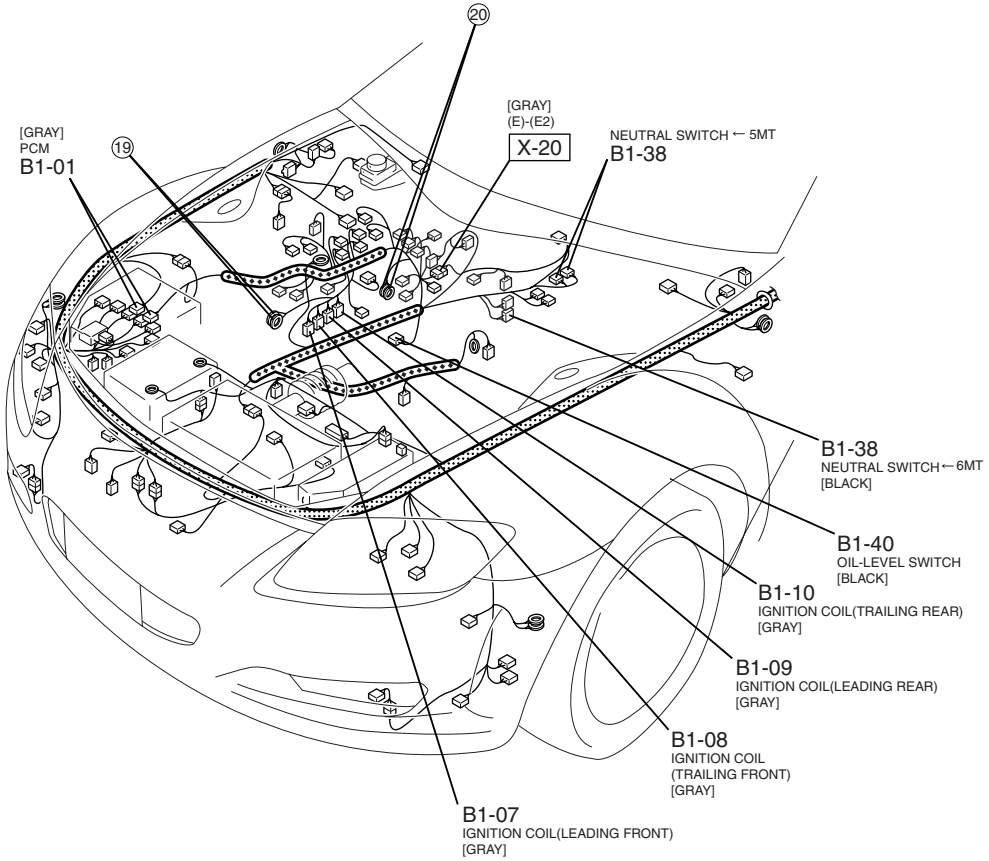

% ...MT

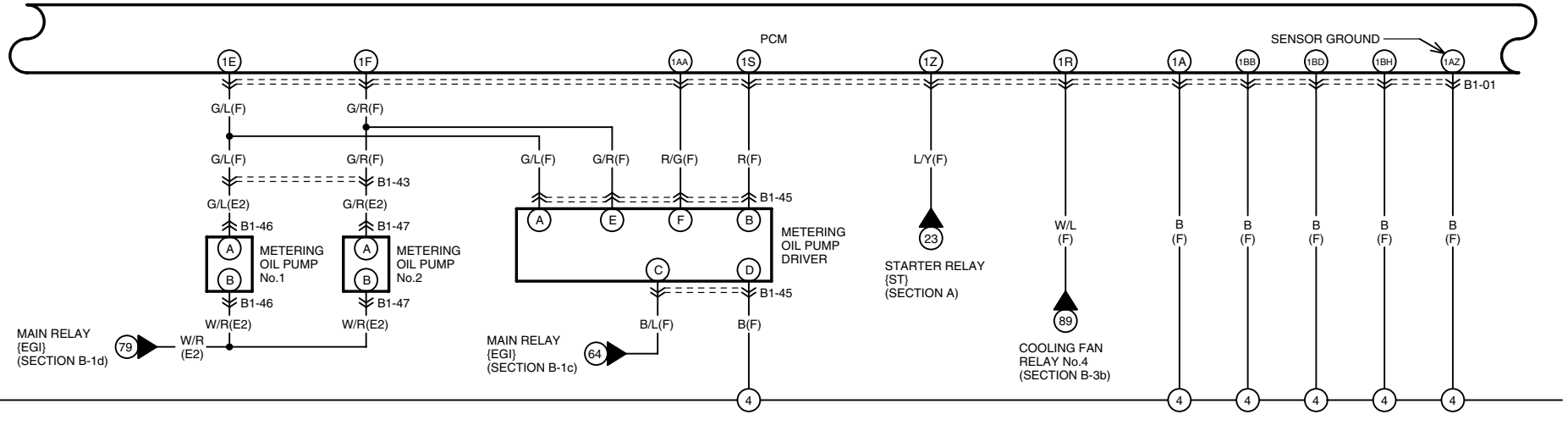

B1-01 PCM(F)

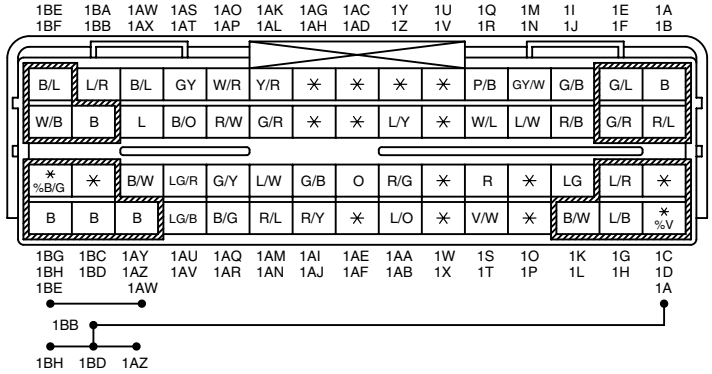

B1-43 FRONT(F)-ENGINE No.2(E2)

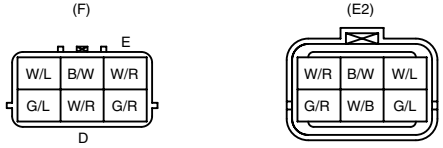

B1-45 METERING OIL PUMP DRIVER(F)

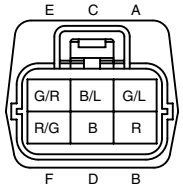

B1-46 METERING OIL PUMP No.1(E2)

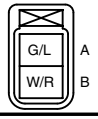

B1-47 METERING OIL PUMP No.2(E2)

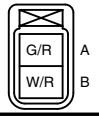

HARNESS SYMBOL: (F) (E) (R)

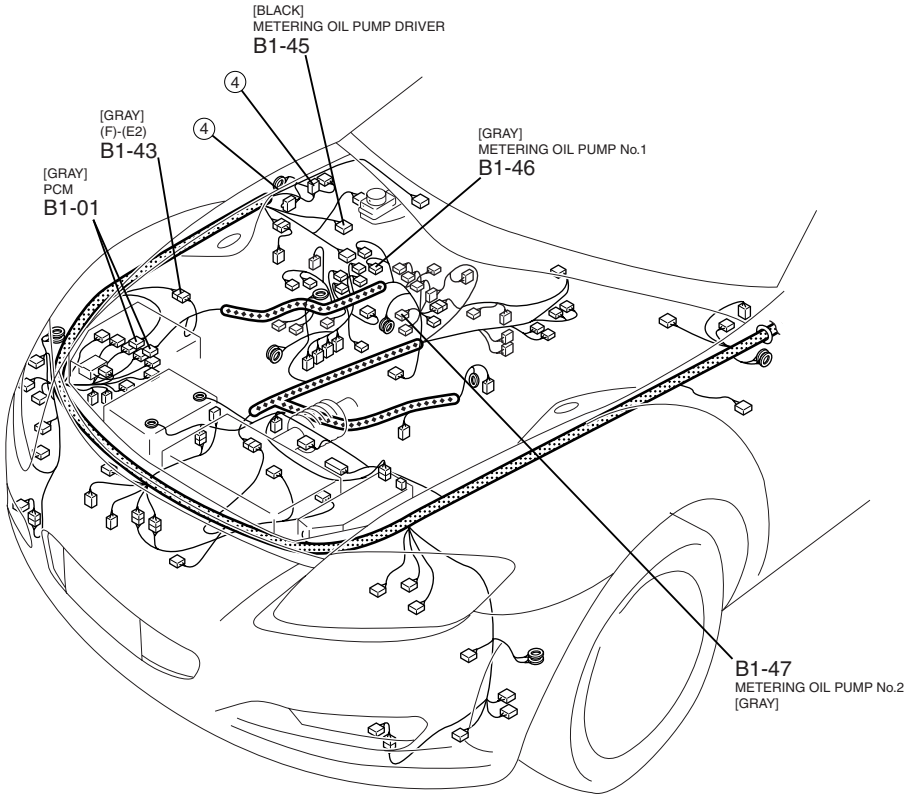

THROTTLE BODY

A B C D E F

B1-19

R/B (E2) R (E2) G/Y (E2) B/L (E2) G (E2) G/R (E2)

B1-01

2A 2B 2P 2AL 2AO 2AK

PCM

SENSOR GROUND

CONSTANT VOLTAGE(Vref)

2E 2AG 2AP 2X 2AD 2Z 2BG 2M 2R 2AA

B1-01

LG(E2)

B1-44

OIL CONTROL VALVE

B1-44

W/B(E2)

D B1-43

W/R(F)

39

MAIN RELAY {EGI} (SECTION B-1a)

B(E2)

Y/B(E2) Y/R(E2) V(E2) P(E2) L/O(E2) BR(E2) G(E2) R/W(E2)

SHIELD WIRE

B1-49

B A

ECCENTRIC SHAFT POSITION SENSOR

B1-49

B1-48

A/F SENSOR

B1-48

B1-50

A B C

OIL PRESSURE SENSOR

MAIN RELAY {EGI} (SECTION B-1d)

180

W/R (E2)

B1-01 PCM(E2)

2BE 2BF	2BA 2BB	2AW 2AX	2AS 2AT	2AO 2AP	2AK 2AL	2AG 2AH	2AC 2AD	2Y 2Z	2U 2V	2Q 2R	2M 2N	2I 2J	2E 2F	2A 2B
R	W	L/O	L/R	G	G/R	Y/B	L	G	Y/R	Y	BR	L/Y	LG	R/B
✳	LG/R	G	Y/G	Y/R	B/L	G/W	V	P	Y/B	G	✳	✳	L/R	R
L/O	G/R	GY	L/G	✳	✳	BR/R	✳	R/W	✳	✳	✳	✳	R/L	R/Y
W/G	LG/B	L/B	B/O	✳	R/G	W/G	✳	B	B	GY/R	G/Y	W/L	✳	G/B
2BG 2BH	2BC 2BD	2AY 2AZ	2AU 2AV	2AQ 2AR	2AM 2AN	2AI 2AJ	2AE 2AF	2AA 2AB	2W 2X	2S 2T	2O 2P	2K 2L	2G 2H	2C 2D

B1-19 THROTTLE BODY(E2)

G/R	G	B/L	G/Y	R	R/B
F	E	D	C	B	A

B1-43 FRONT(F)-ENGINE No2(E2)

(F)

		E
W/L	B/W	W/R
G/L	W/R	G/R
		D

(E2)

W/R	B/W	W/L
G/R	W/B	G/L

B1-44 OIL CONTROL VALVE(E2)

W/B	LG

B1-48 A/F SENSOR(E2)

W/R	V
L/O	P

B1-49 ECCENTRIC SHAFT POSITION SENSOR(E2)

Y/R	Y/B
B	A

B1-50 OIL PRESSURE SENSOR(E2)

R/W	G	BR
C	B	A

HARNESS SYMBOL: (F) (E) (R)

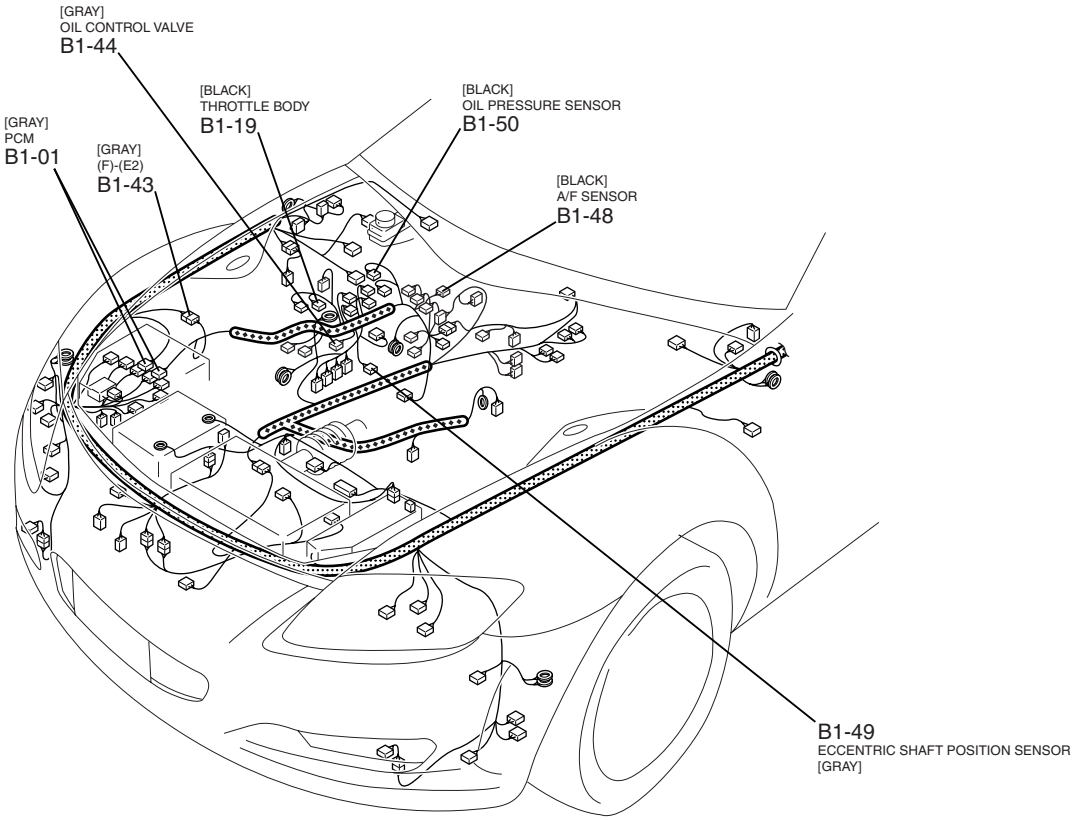

% ...MT

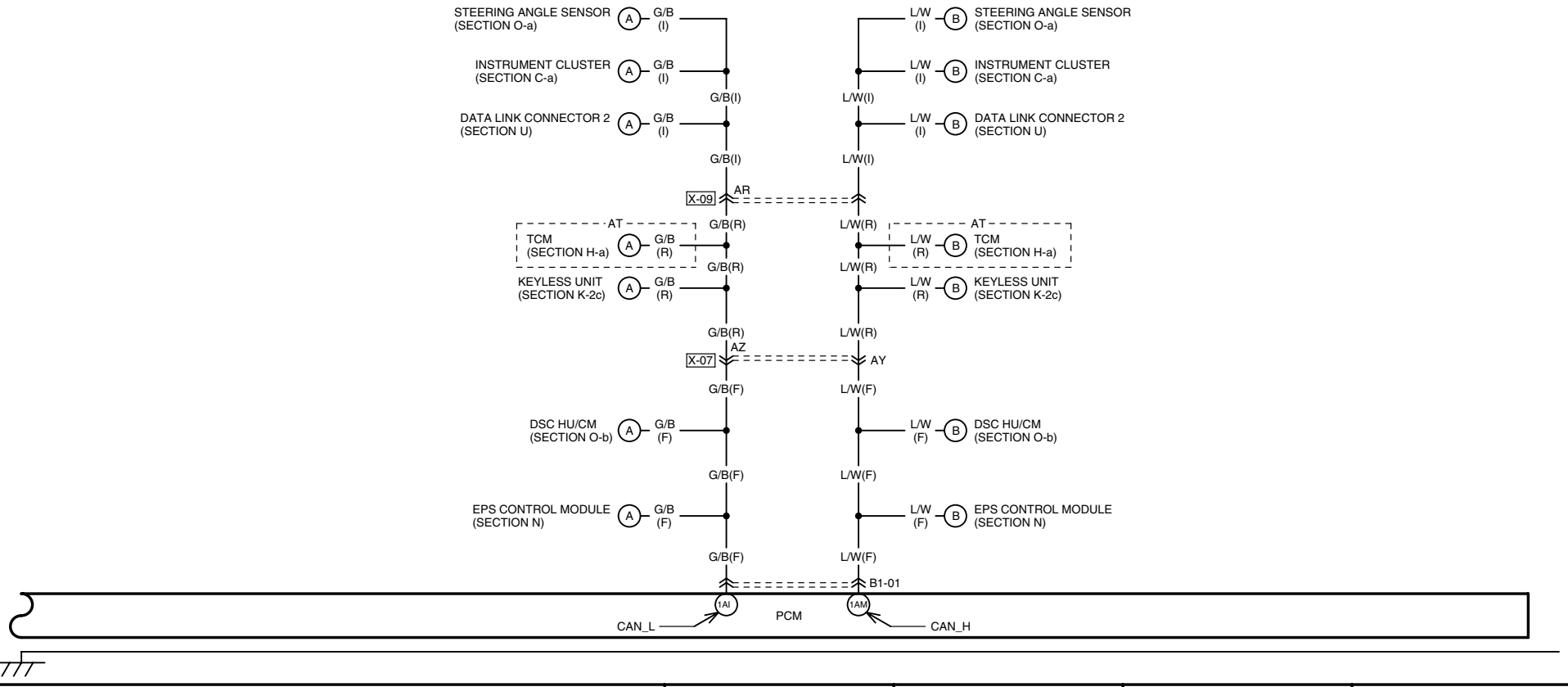
STEERING ANGLE SENSOR (SECTION O-a)
INSTRUMENT CLUSTER (SECTION C-a)
DATA LINK CONNECTOR 2 (SECTION U)
TCM (SECTION H-a)
KEYLESS UNIT (SECTION K-2c)
DSC HU/CM (SECTION O-b)
EPS CONTROL MODULE (SECTION N)
G/B (I)
L/W (I)
G/B(I)
L/W(I)
X-09
AR
AT
G/B(R)
L/W(R)
G/B (R)
L/W (R)
X-07
AZ
AY
G/B(F)
L/W(F)
G/B (F)
L/W (F)
B1-01
1AI
1AM
PCM
CAN_L
CAN_H

B1-01 PCM(F)

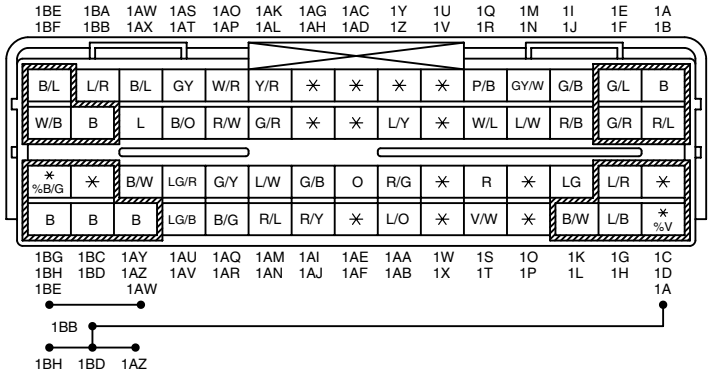
1BE 1BA 1AW 1AS 1AO 1AK 1AG 1AC 1Y 1U 1Q 1M 1I 1E 1A
1BF 1BB 1AX 1AT 1AP 1AL 1AH 1AD 1Z 1V 1R 1N 1J 1F 1B
B/L L/R B/L GY W/R Y/R P/B GY/W G/B G/L B
W/B B L B/O R/W G/R L/Y W/L L/W R/B G/R R/L
%B/G B/W LG/R G/Y L/W G/B O R/G R LG L/R
B B B LG/B B/G R/L R/Y L/O V/W B/W L/B %V
1BG 1BC 1AY 1AU 1AQ 1AM 1AI 1AE 1AA 1W 1S 1O 1K 1G 1C
1BH 1BD 1AZ 1AV 1AR 1AN 1AJ 1AF 1AB 1X 1T 1P 1L 1H 1D
1BE 1AW 1A
1BB
1BH 1BD 1AZ

HARNESS SYMBOL: (F) (E) (R)

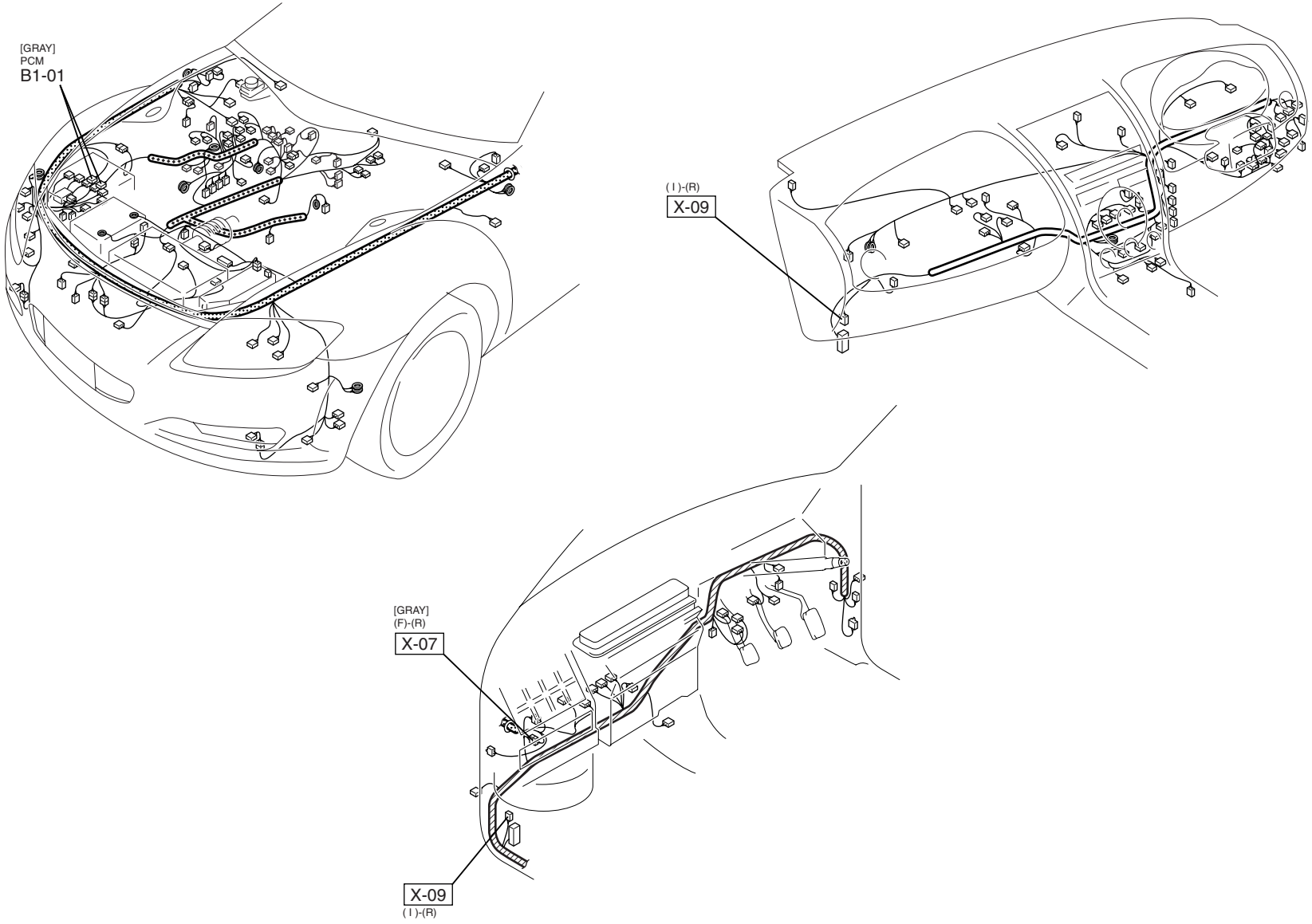

FUEL CONTROL SYSTEM

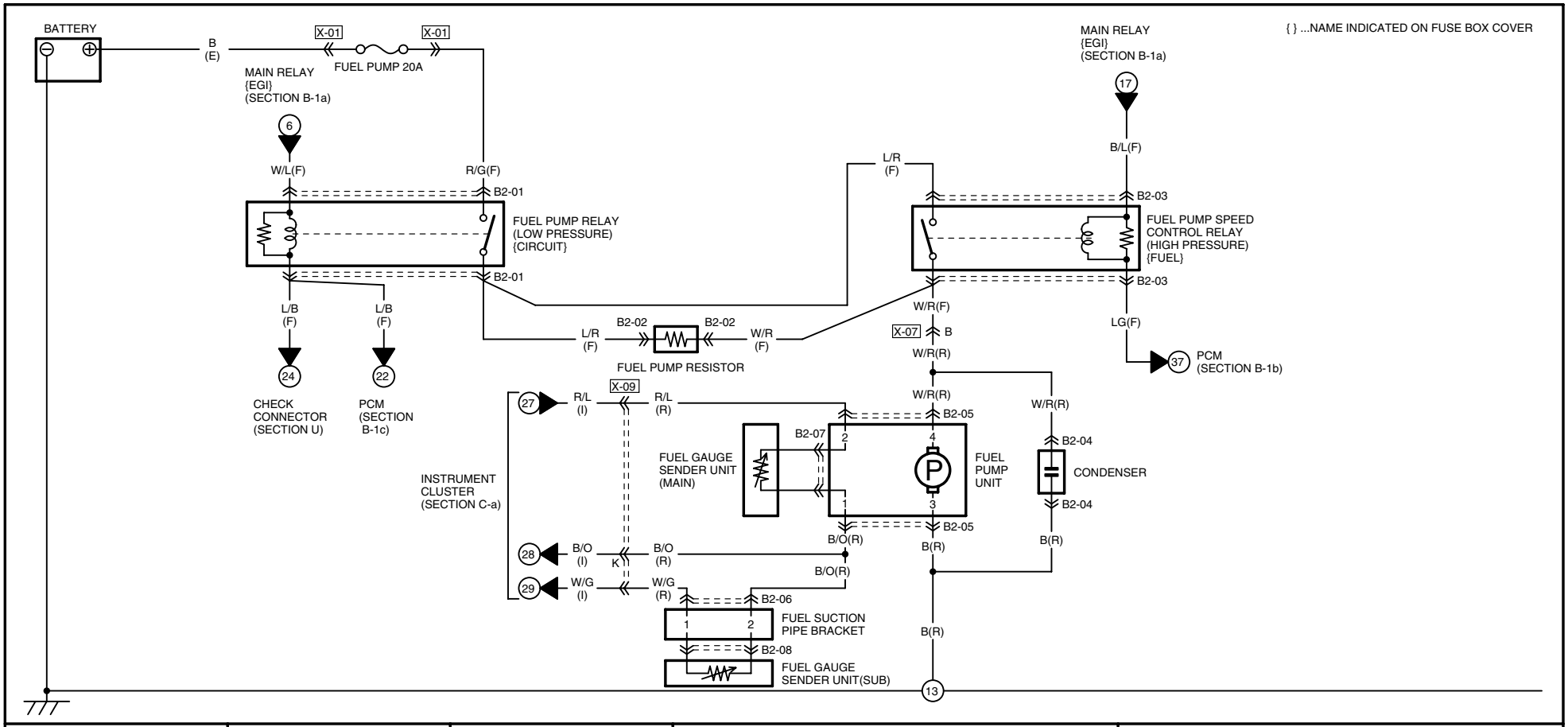

B2-01 FUEL PUMP RELAY (LOW PRESSURE) {CIRCUIT}(F)

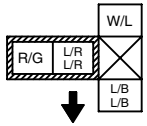

NOTE:THIS IS THE CONNECTOR AS SEEN FROM THE TERMINAL SIDE.

B2-02 FUEL PUMP RESISTOR(F)

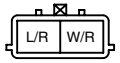

B2-03 FUEL PUMP SPEED CONTROL RELAY(HIGH PRESSURE) {FUEL}(F)

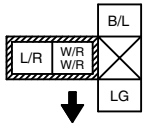

NOTE:THIS IS THE CONNECTOR AS SEEN FROM THE TERMINAL SIDE.

B2-05 REAR(R)-FUEL PUMP UNIT

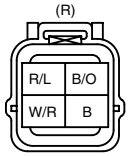

(FUEL PUMP UNIT)

TERMINALS OF THIS CONNECTOR ARE INDICATED BY NUMBERS.

NOTE:THIS IS THE CONNECTOR AS SEEN FROM THE TERMINAL SIDE.

B2-06 REAR(R)-FUEL SUCTION PIPE BRACKET

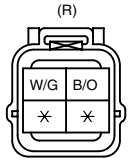

(FUEL SUCTION PIPE BRACKET)

TERMINALS OF THIS CONNECTOR ARE INDICATED BY NUMBERS.

NOTE:THIS IS THE CONNECTOR AS SEEN FROM THE TERMINAL SIDE.

B2-04 CONDENSER(R)

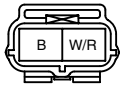

B2-07 FUEL GAUGE SENDER UNIT(MAIN) (FUEL PUMP UNIT)

TERMINALS OF THIS CONNECTOR ARE INDICATED BY NUMBERS.

NOTE:THIS IS THE CONNECTOR AS SEEN FROM THE TERMINAL SIDE.

B2-08 FUEL GAUGE SENDER UNIT(SUB) (FUEL SUCTION PIPE BRACKET)

TERMINALS OF THIS CONNECTOR ARE INDICATED BY NUMBERS.

NOTE:THIS IS THE CONNECTOR AS SEEN FROM THE TERMINAL SIDE.

HARNESS SYMBOL: (F) (E) (R)

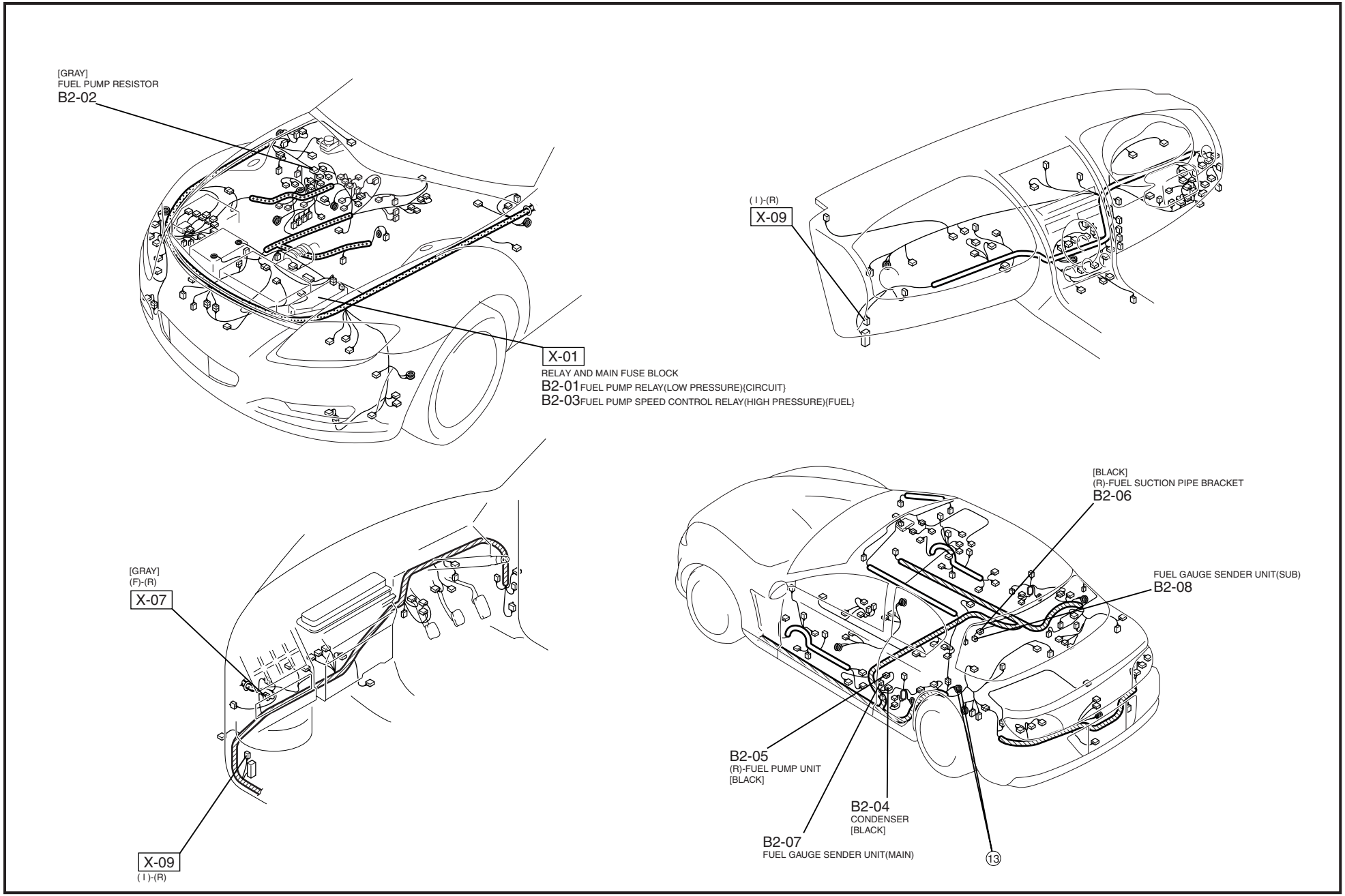

COOLING FAN SYSTEM

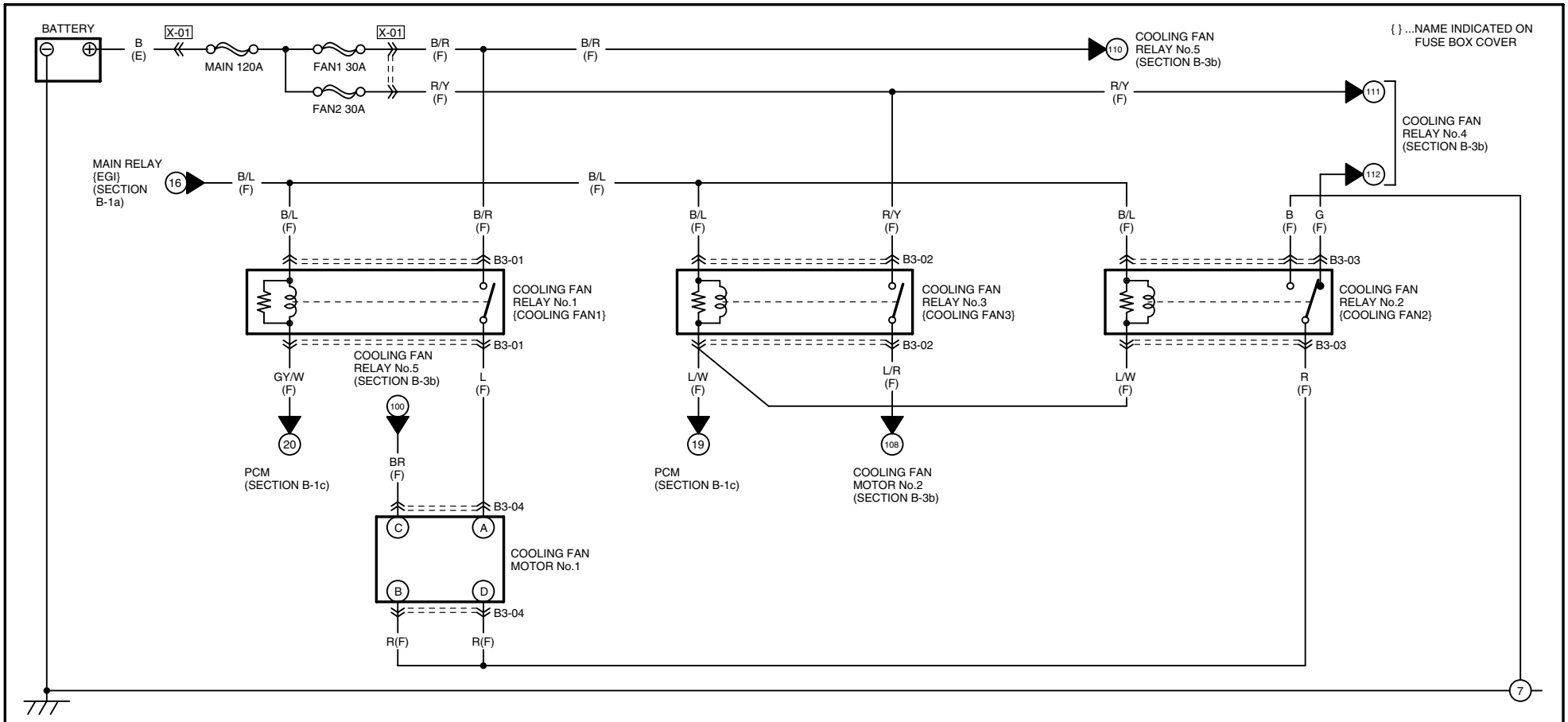

B3-01 COOLING FAN RELAY No.1 {COOLING FAN1}(F)

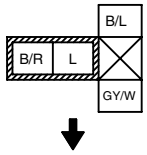

NOTE:THIS IS THE CONNECTOR AS SEEN FROM THE TERMINAL SIDE.

B3-02 COOLING FAN RELAY No.3 {COOLING FAN3}(F)

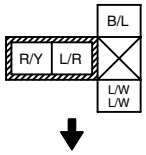

NOTE:THIS IS THE CONNECTOR AS SEEN FROM THE TERMINAL SIDE.

B3-03 COOLING FAN RELAY No.2 {COOLING FAN2}(F)

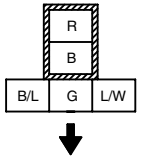

NOTE:THIS IS THE CONNECTOR AS SEEN FROM THE TERMINAL SIDE.

B3-04 COOLING FAN MOTOR No.1(F)

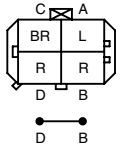

HARNESS SYMBOL: (F) (E) (R)

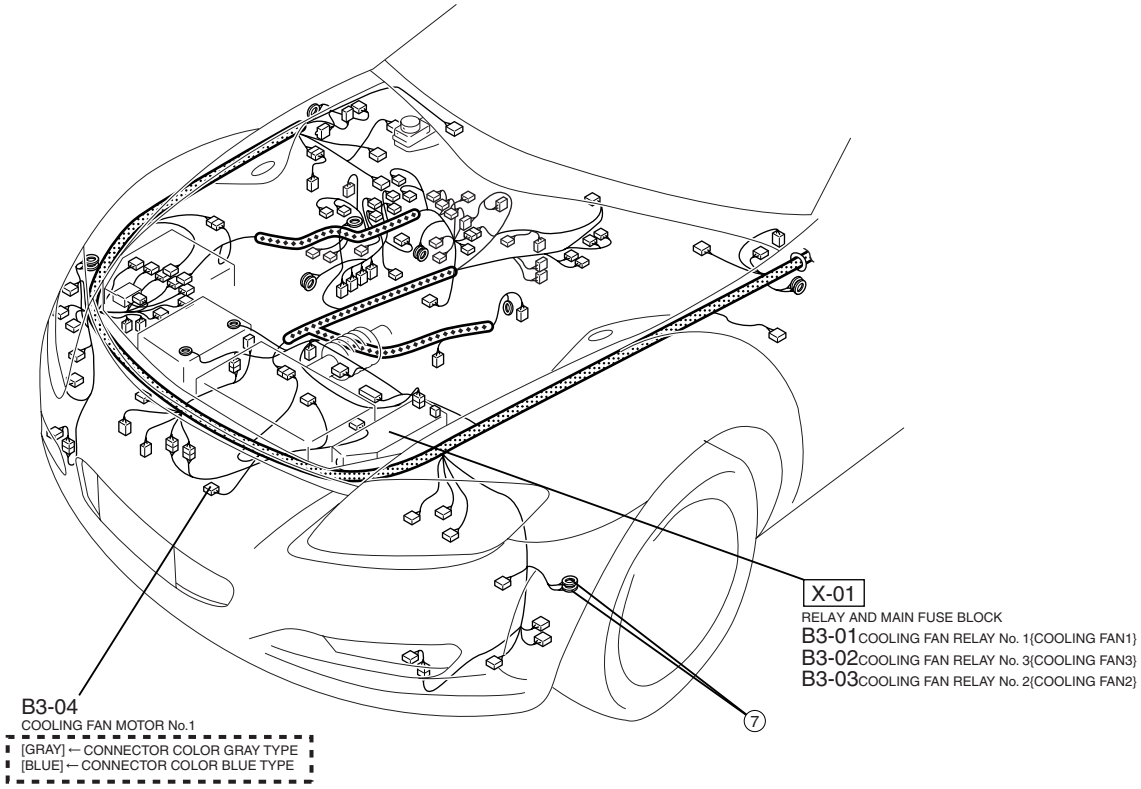

COOLING FAN SYSTEM

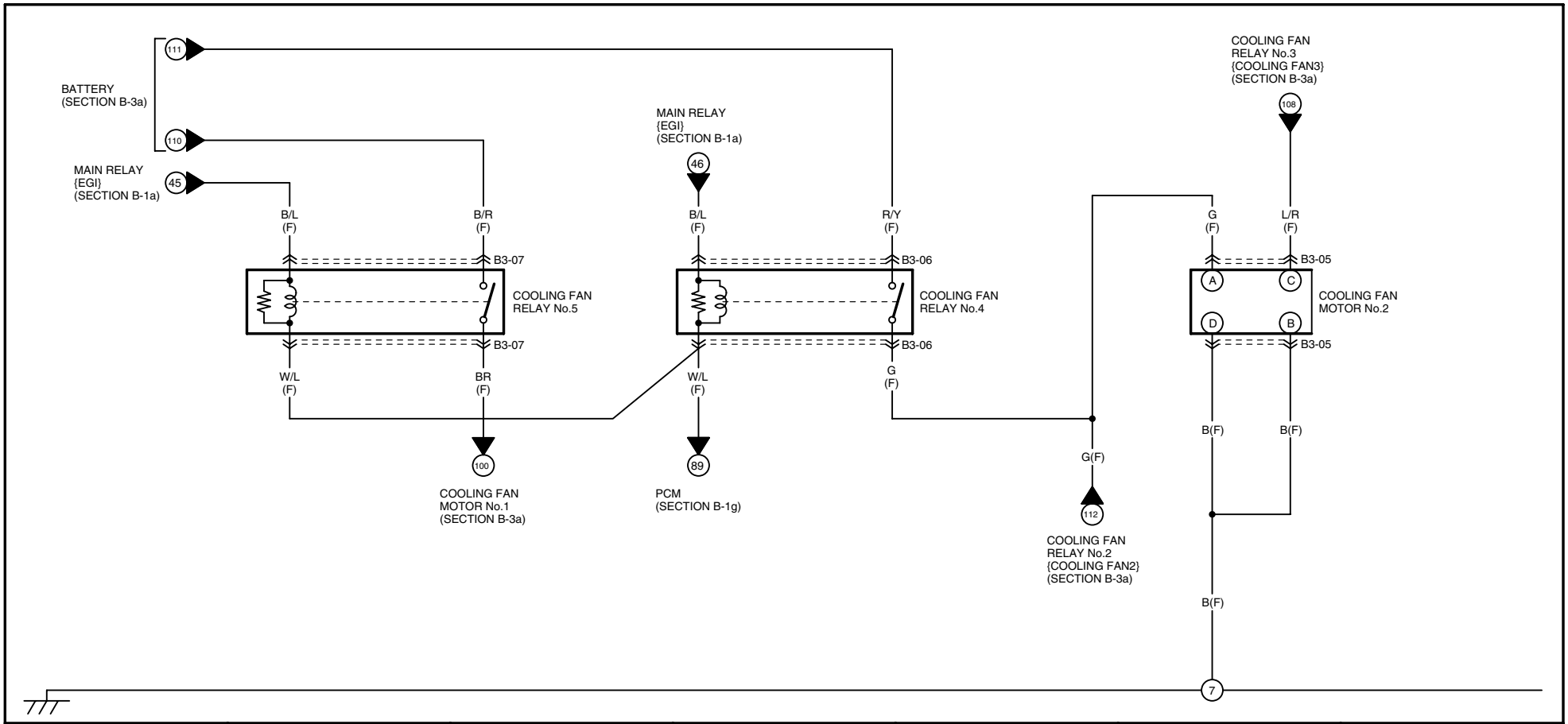

B3-05 COOLING FAN MOTOR No.2(F)

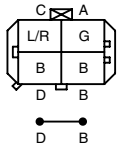

B3-06 COOLING FAN RELAY No.4(F)

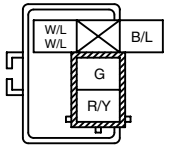

B3-07 COOLING FAN RELAY No.5(F)

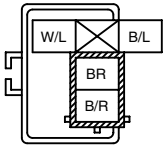

HARNESS SYMBOL: (F) (E) (R)

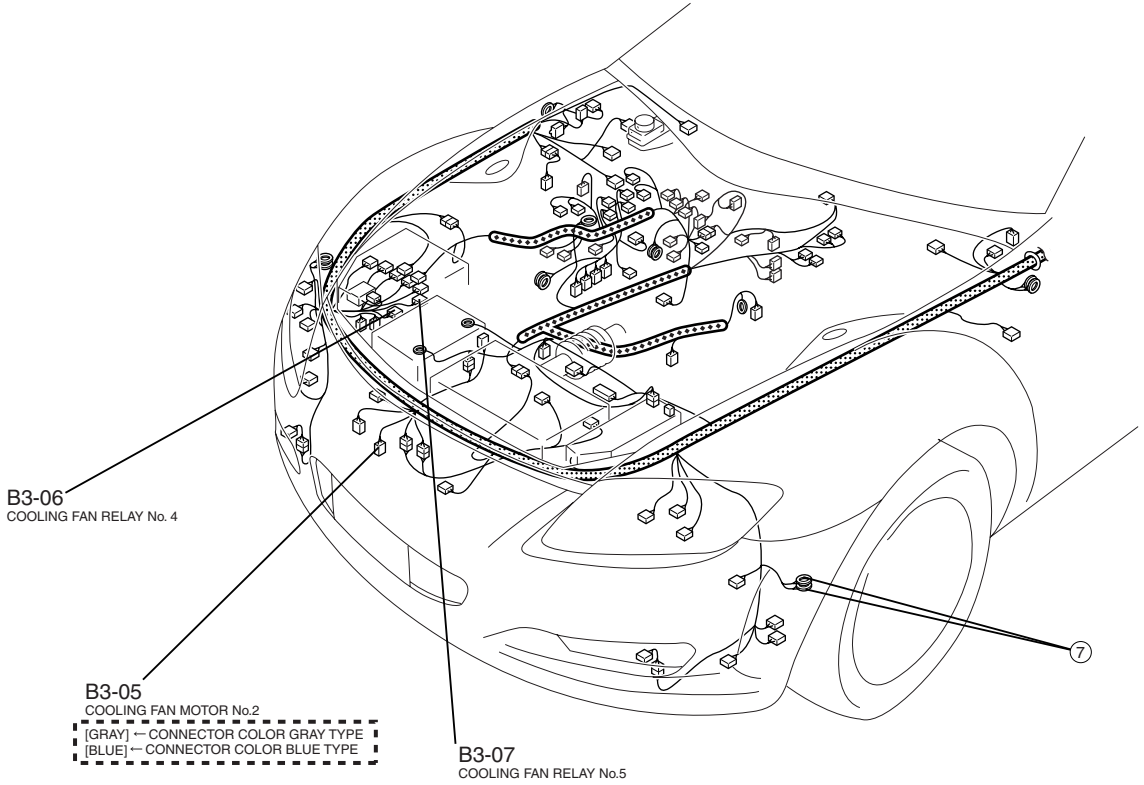

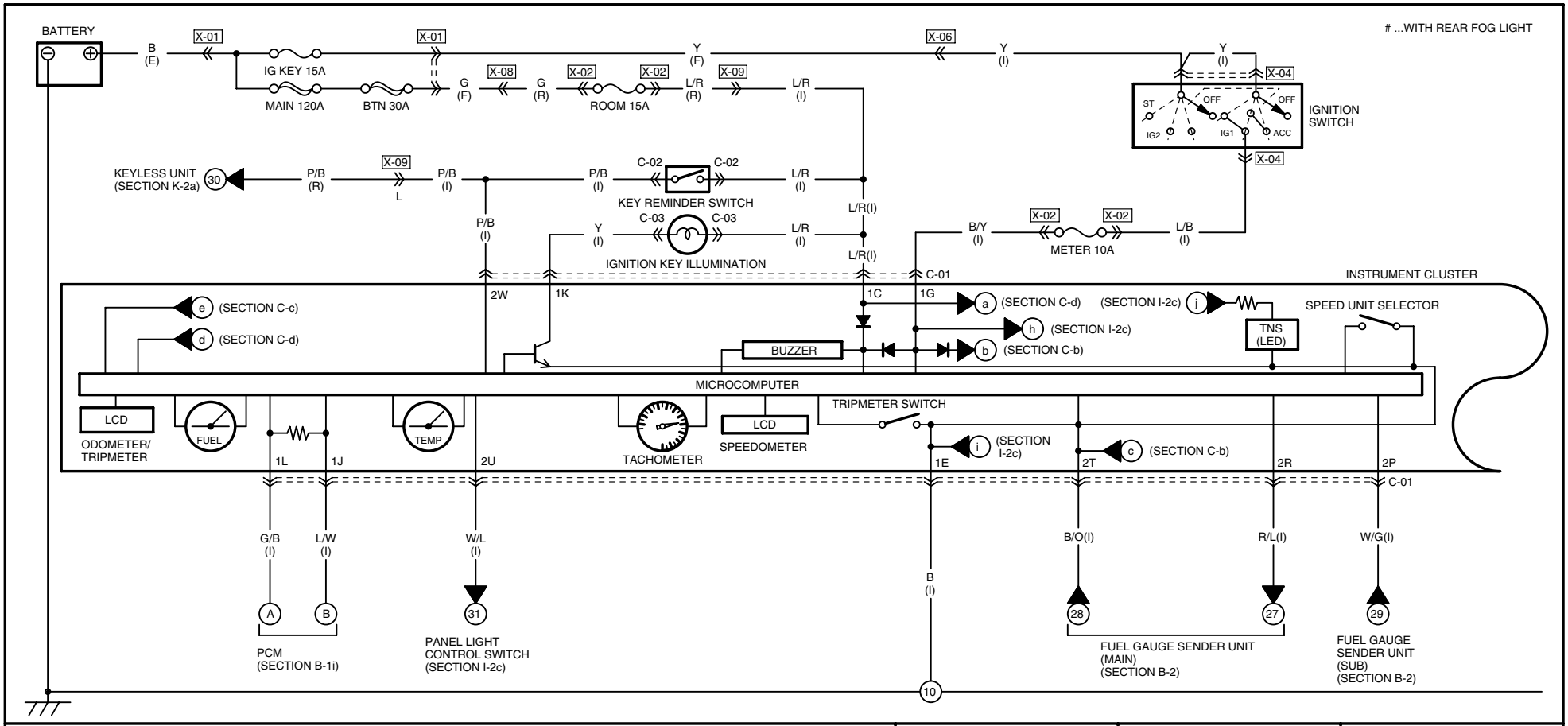

C-01 INSTRUMENT CLUSTER(I)

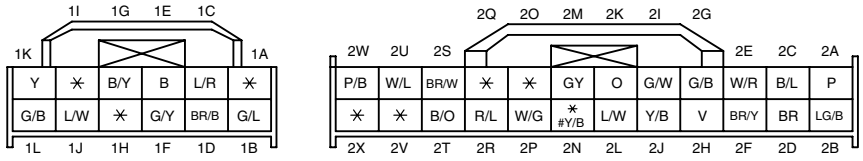

C-02 KEY REMINDER SWITCH(I)

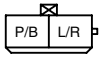

C-03 IGNITION KEY ILLUMINATION(I)

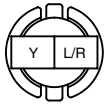

HARNESS SYMBOL: (F) (E) (R)

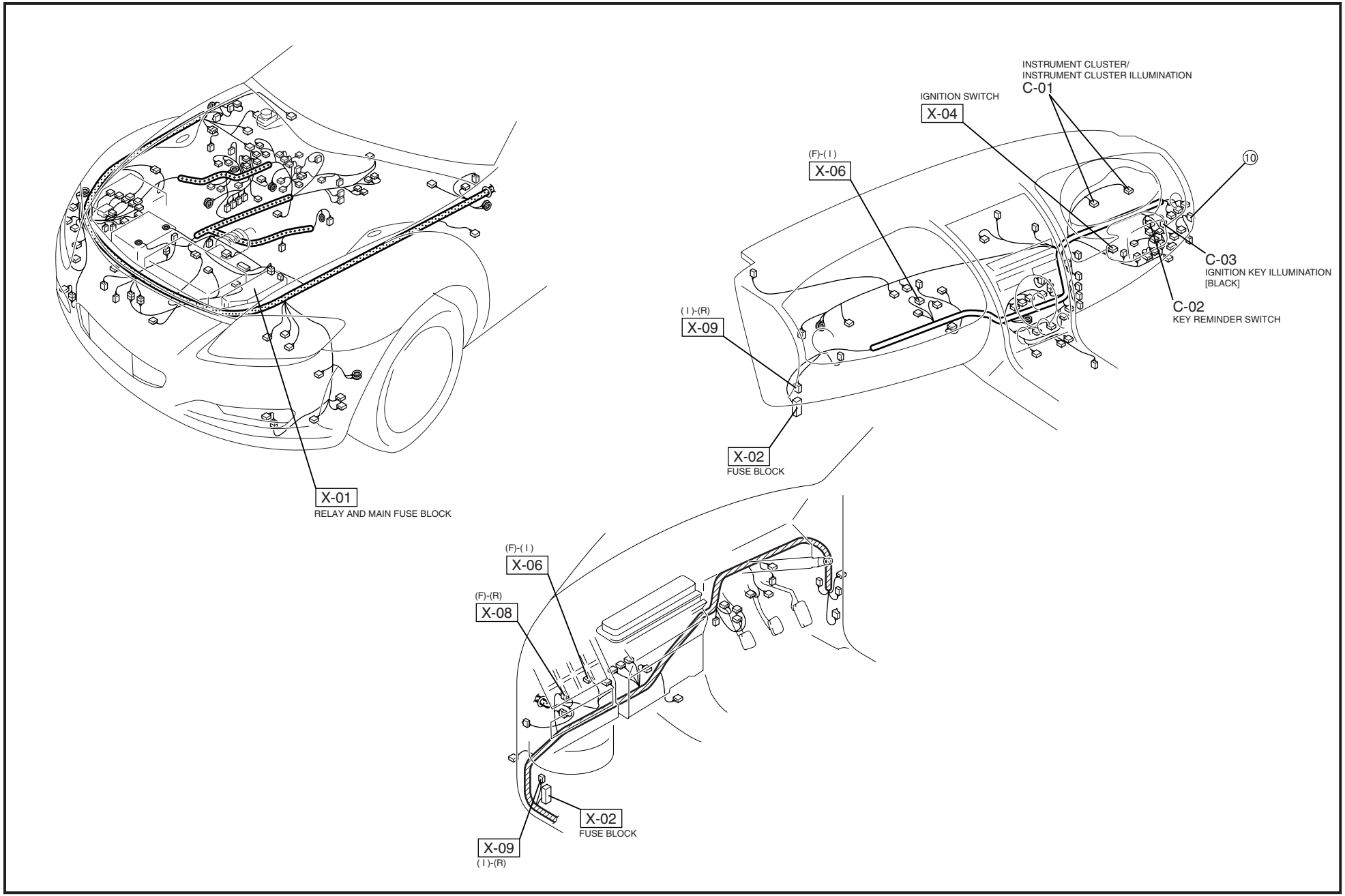

...WITH REAR FOG LIGHT

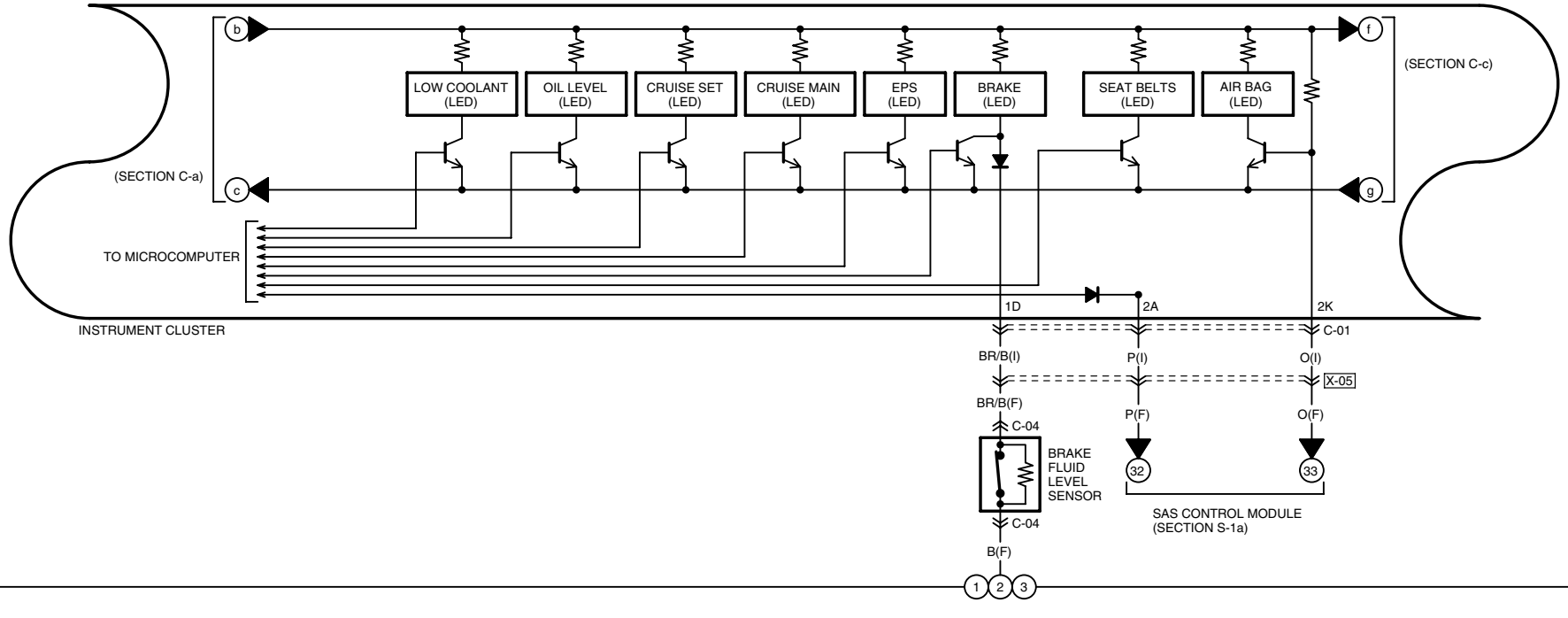

C-01 INSTRUMENT CLUSTER(I)

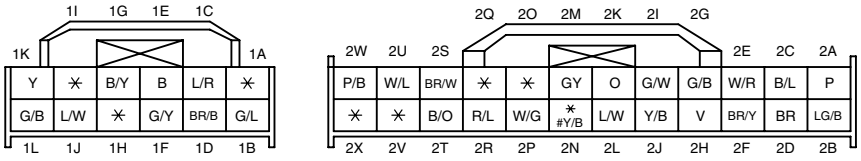

C-04 BRAKE FLUID LEVEL SENSOR(F)

HARNESS SYMBOL: (F) (E) (R)

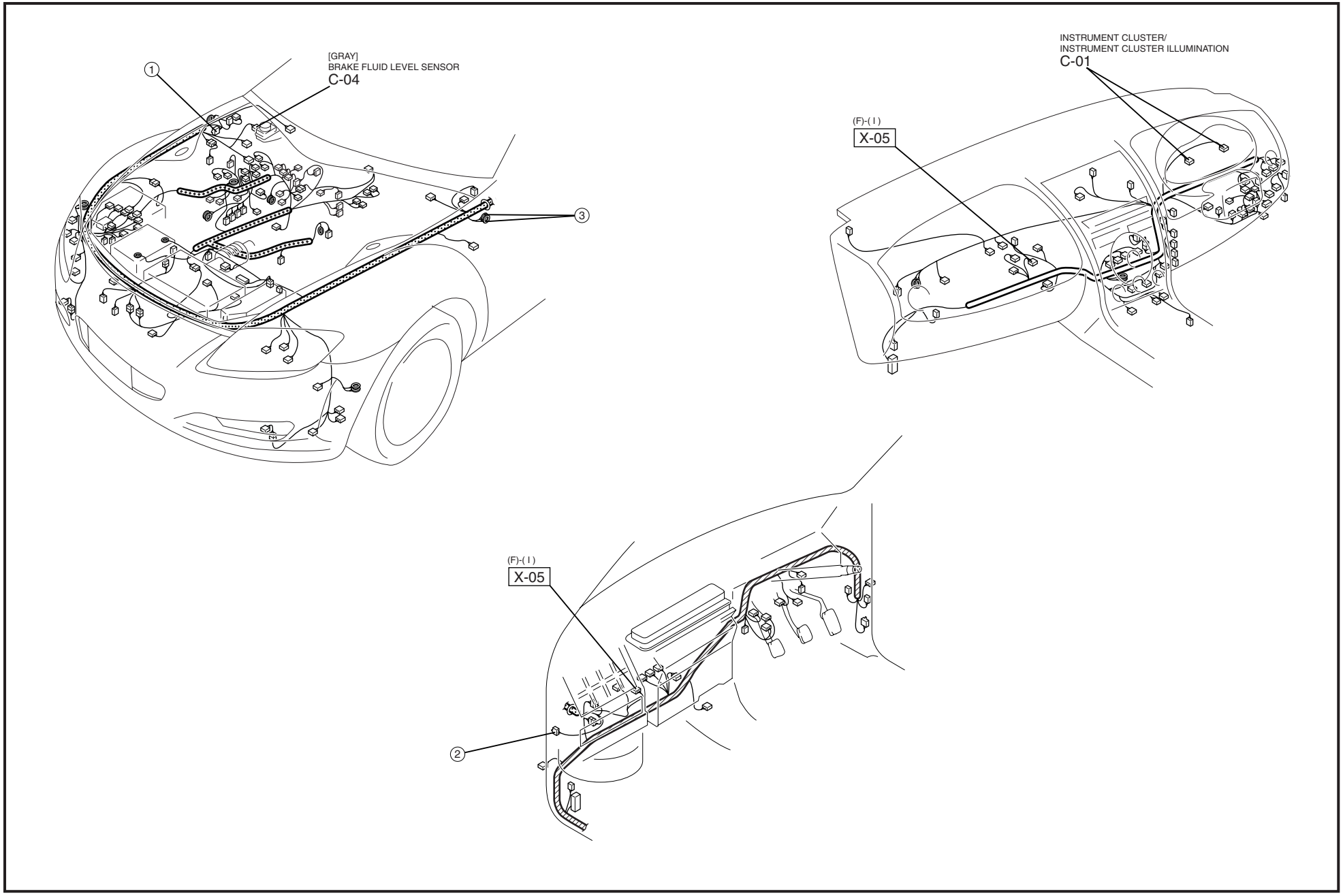

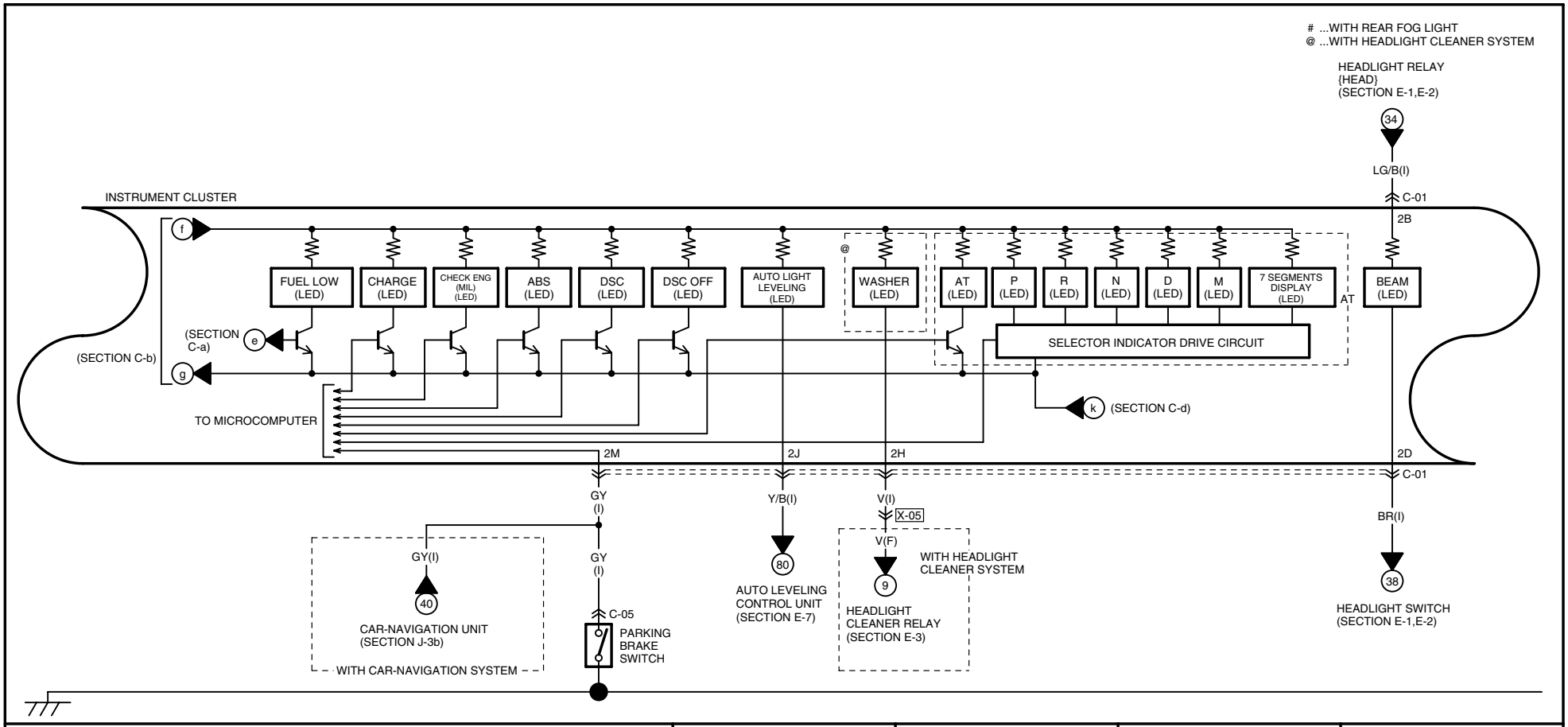

C-01 INSTRUMENT CLUSTER(I)

	2Q	2O	2M	2K	2I	2G					
2W	2U	2S							2E	2C	2A
P/B	W/L	BR/W	*	*	GY	O	G/W	G/B	W/R	B/L	P
*	*	B/O	R/L	W/G	* #Y/B	L/W	Y/B	V	BR/Y	BR	LG/B
2X	2V	2T	2R	2P	2N	2L	2J	2H	2F	2D	2B

C-05 PARKING BRAKE SWITCH(I)

HARNESS SYMBOL: (F) (E) (R)

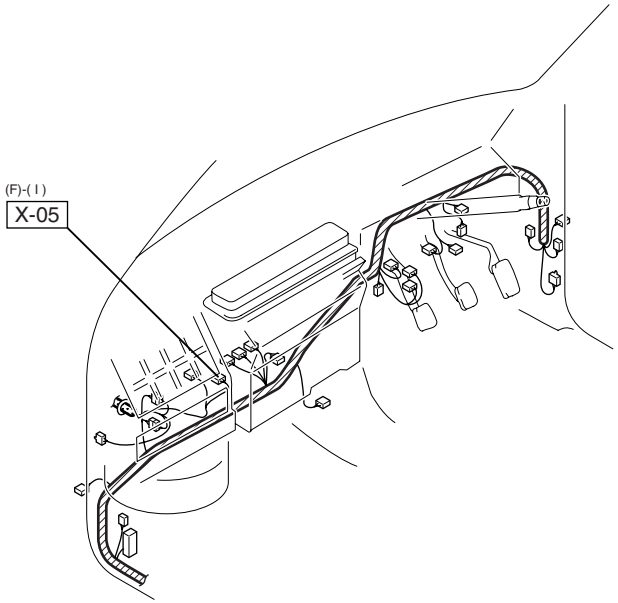

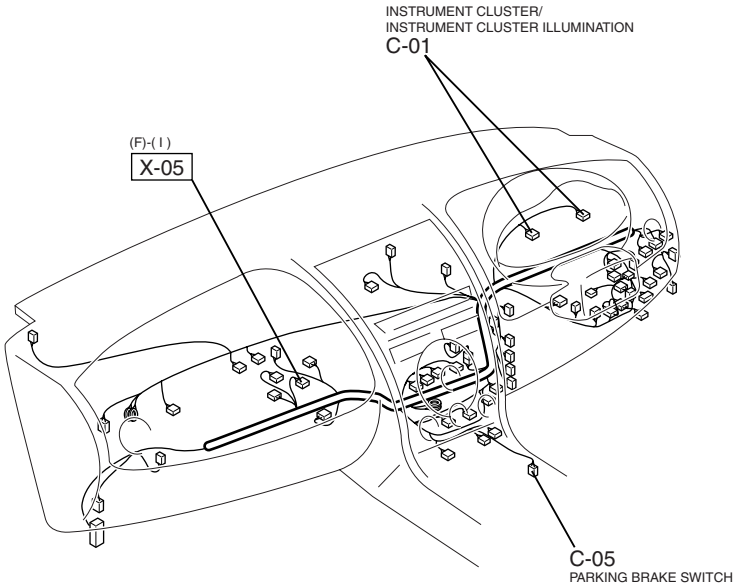

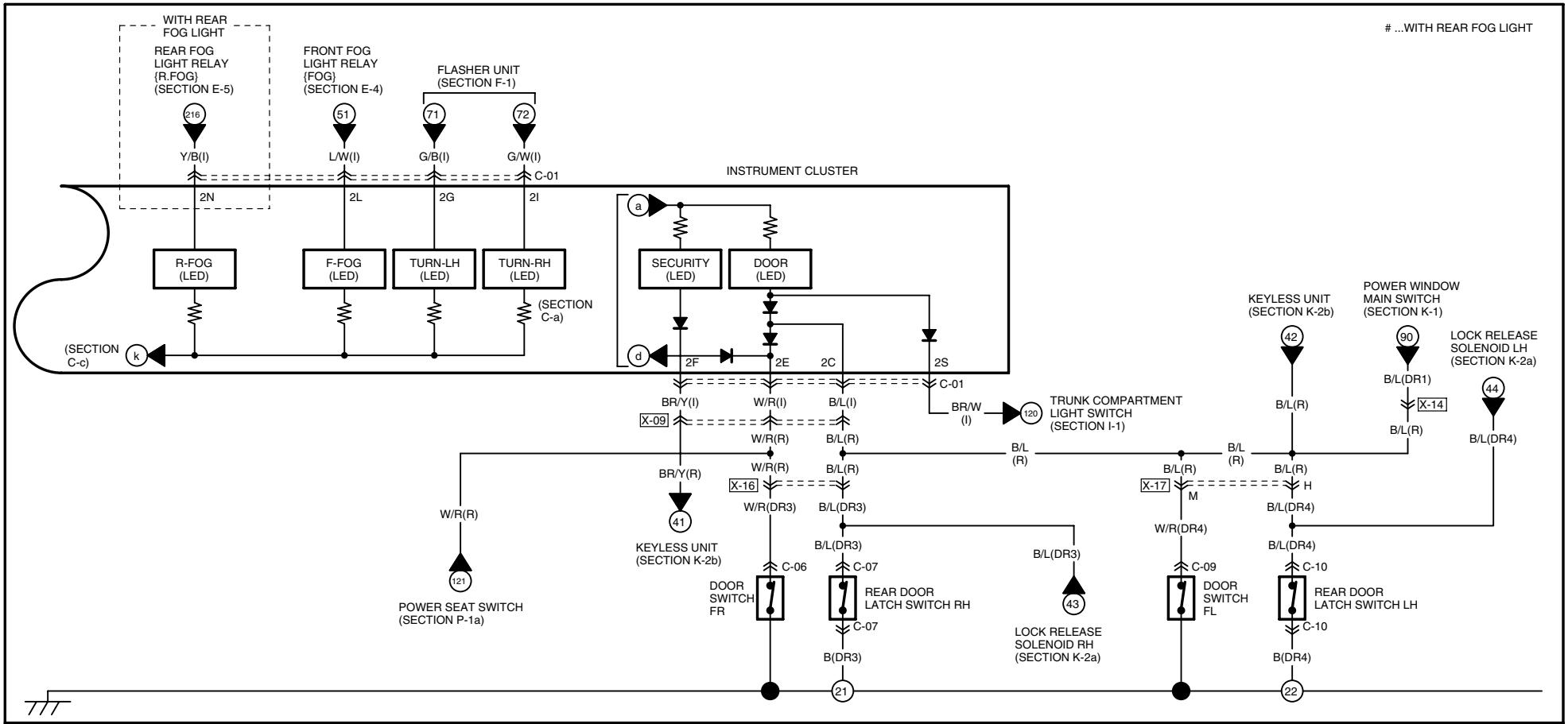

C-01 INSTRUMENT CLUSTER(I)

	2Q	2O	2M	2K	2I	2G				
2W	2U	2S					2E	2C	2A	
P/B	W/L	BR/W	✳	✳	GY	O	G/W	G/B	W/R	B/L	P
✳	✳	B/O	R/L	W/G	✳ #Y/B	L/W	Y/B	V	BR/Y	BR	LG/B
2X	2V	2T	2R	2P	2N	2L	2J	2H	2F	2D	2B

C-06 DOOR SWITCH FR(DR3)

C-07 REAR DOOR LATCH SWITCH RH(DR3)

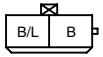

C-09 DOOR SWITCH FL(DR4)

C-10 REAR DOOR LATCH SWITCH LH(DR4)

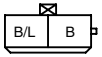

HARNESS SYMBOL: (F) (E) (R)

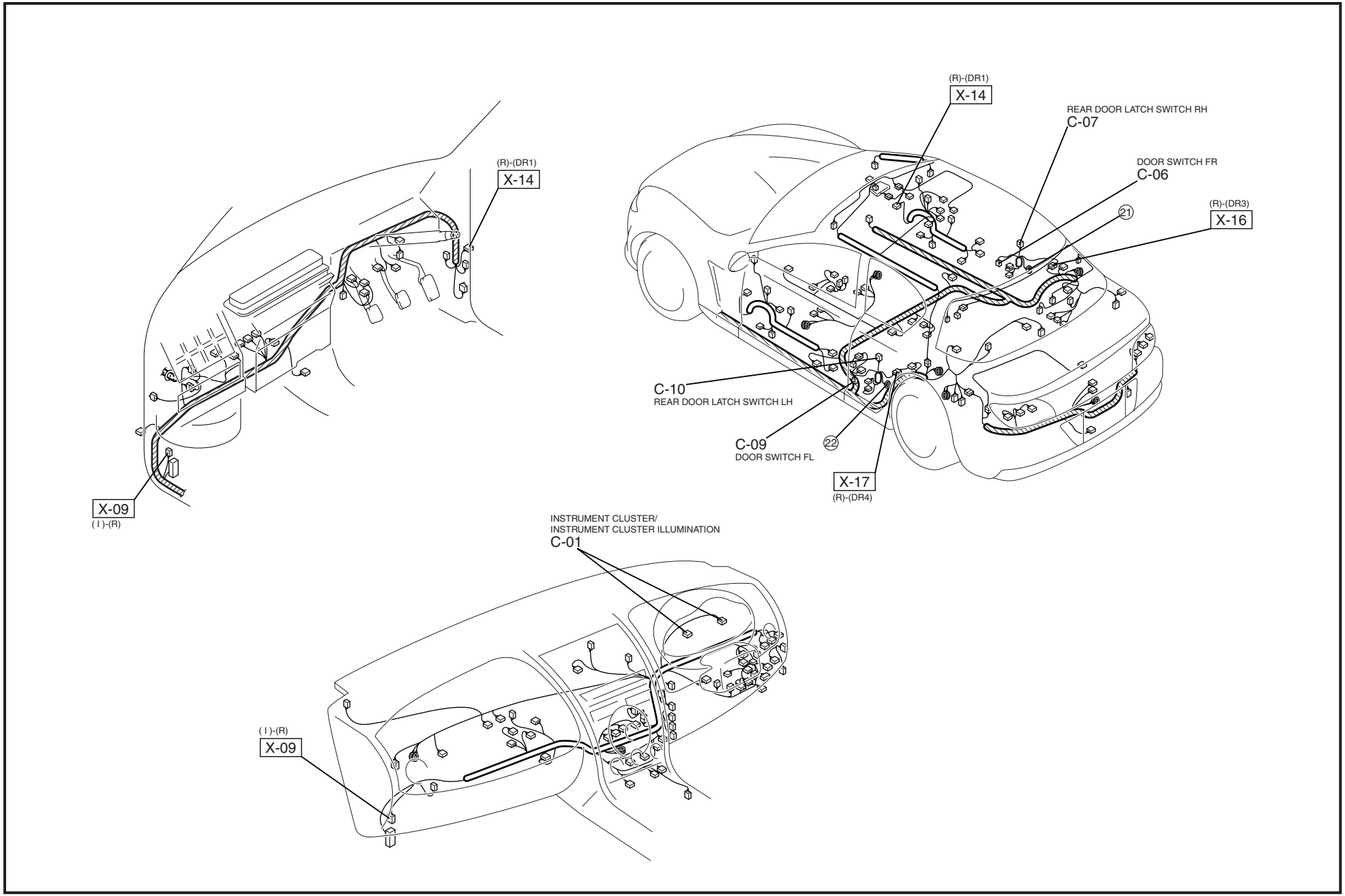

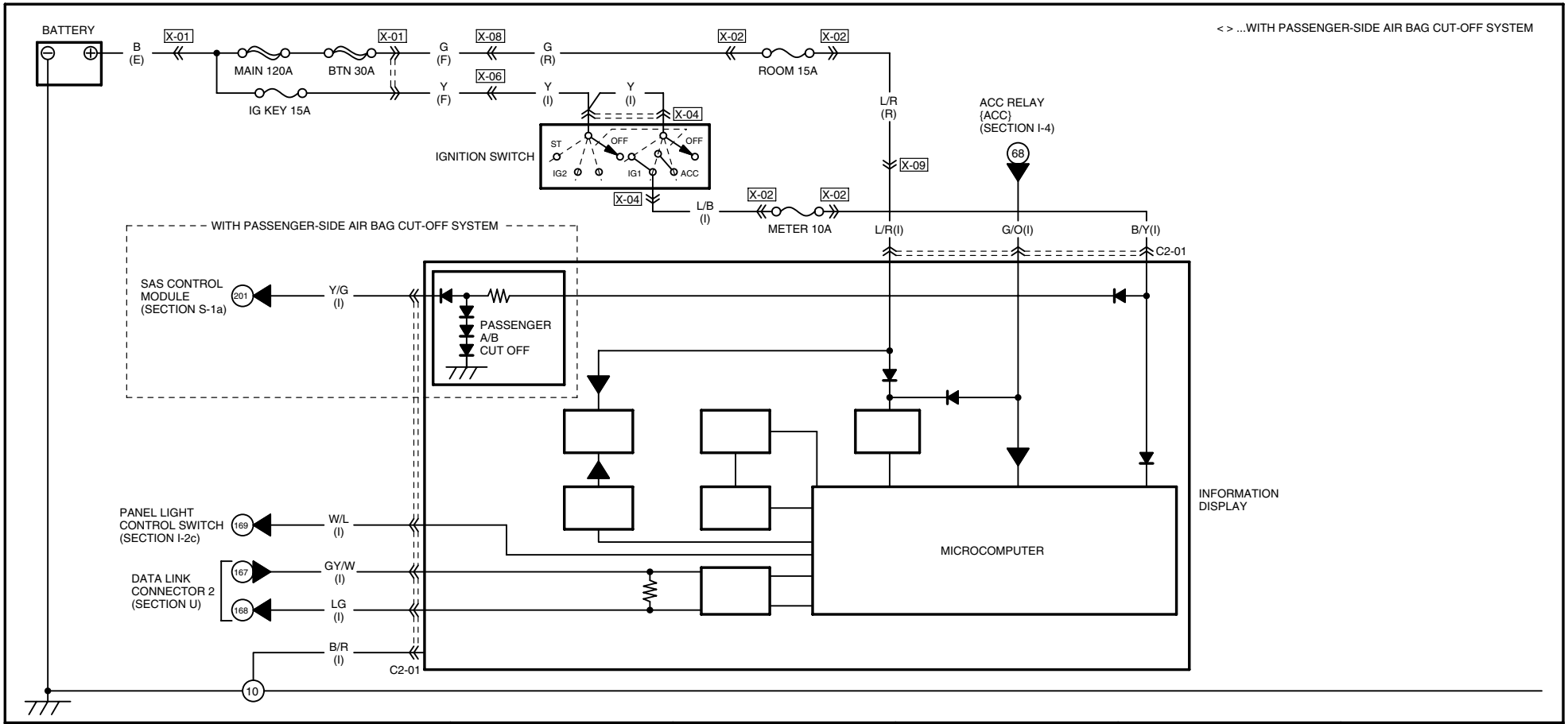

C2-01 INFORMATION DISPLAY(I)

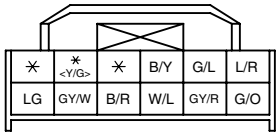

HARNESS SYMBOL: (F) (E) (R)

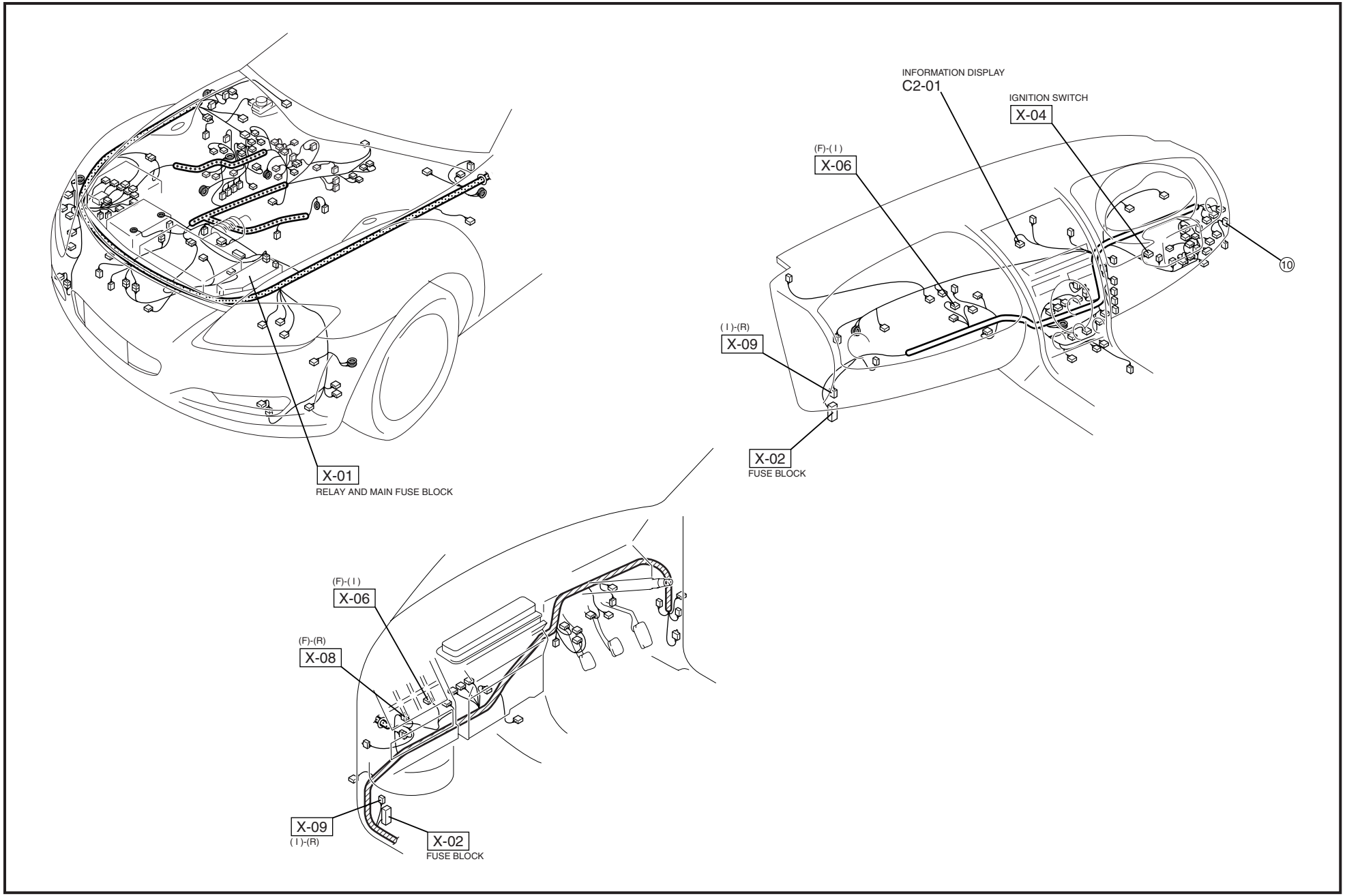

WINDSHIELD WIPER AND WASHER

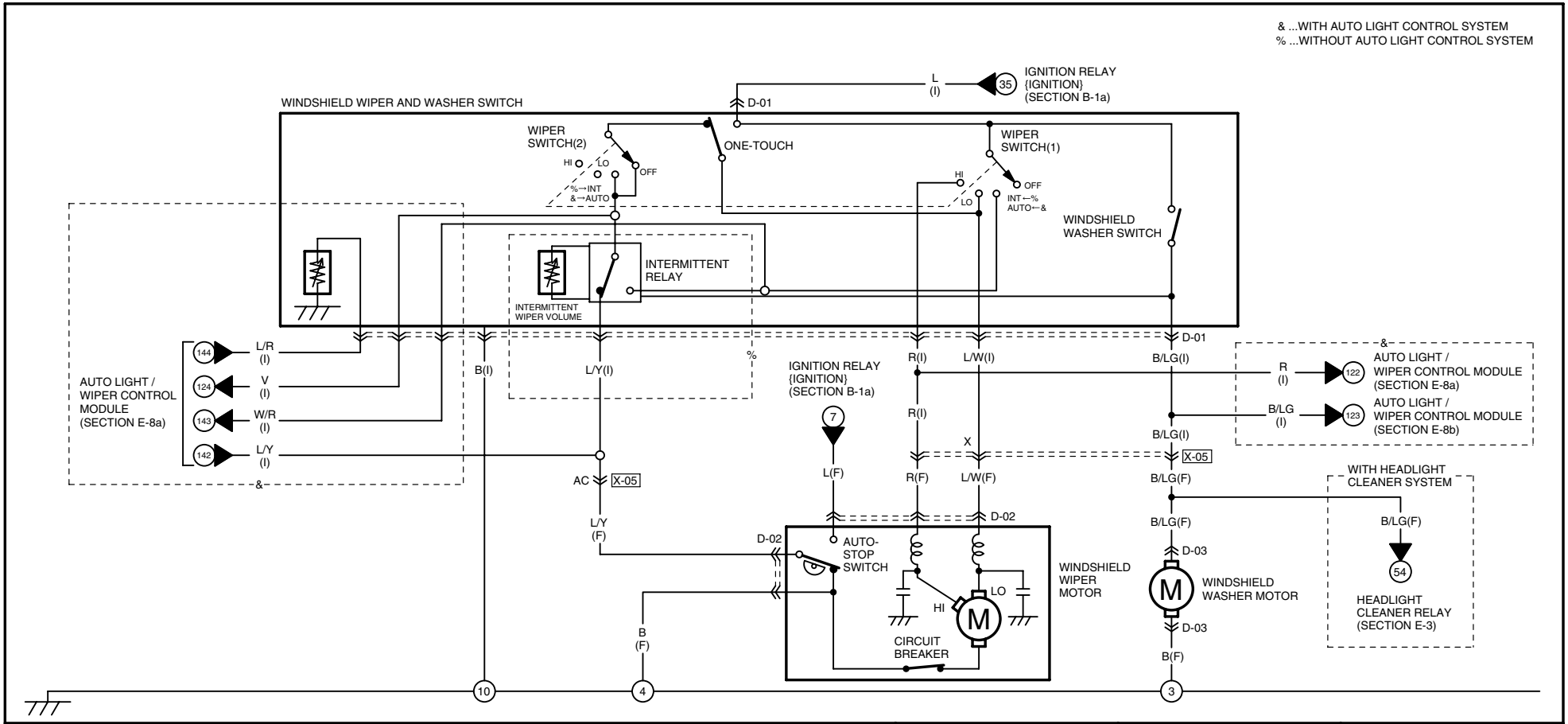

D-01 WINDSHIELD WIPER AND WASHER SWITCH(I)

WIPER AND WASHER SWITCH RIGHT SIDE

R	B	L/W			L	V	B/LG
W/R	✳	✳	✳	✳	✳	L/R	✳

WIPER AND WASHER SWITCH LEFT SIDE

B/LG	L/Y &V	L			L/W	B	R
✳	✳ &L/R	✳	✳	✳	✳	✳	✳ &W/R

D-02 WINDSHIELD WIPER MOTOR(F)

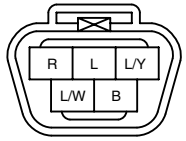

D-03 WINDSHIELD WASHER MOTOR (F)

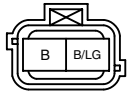

HARNESS SYMBOL: (F) (E) (R)

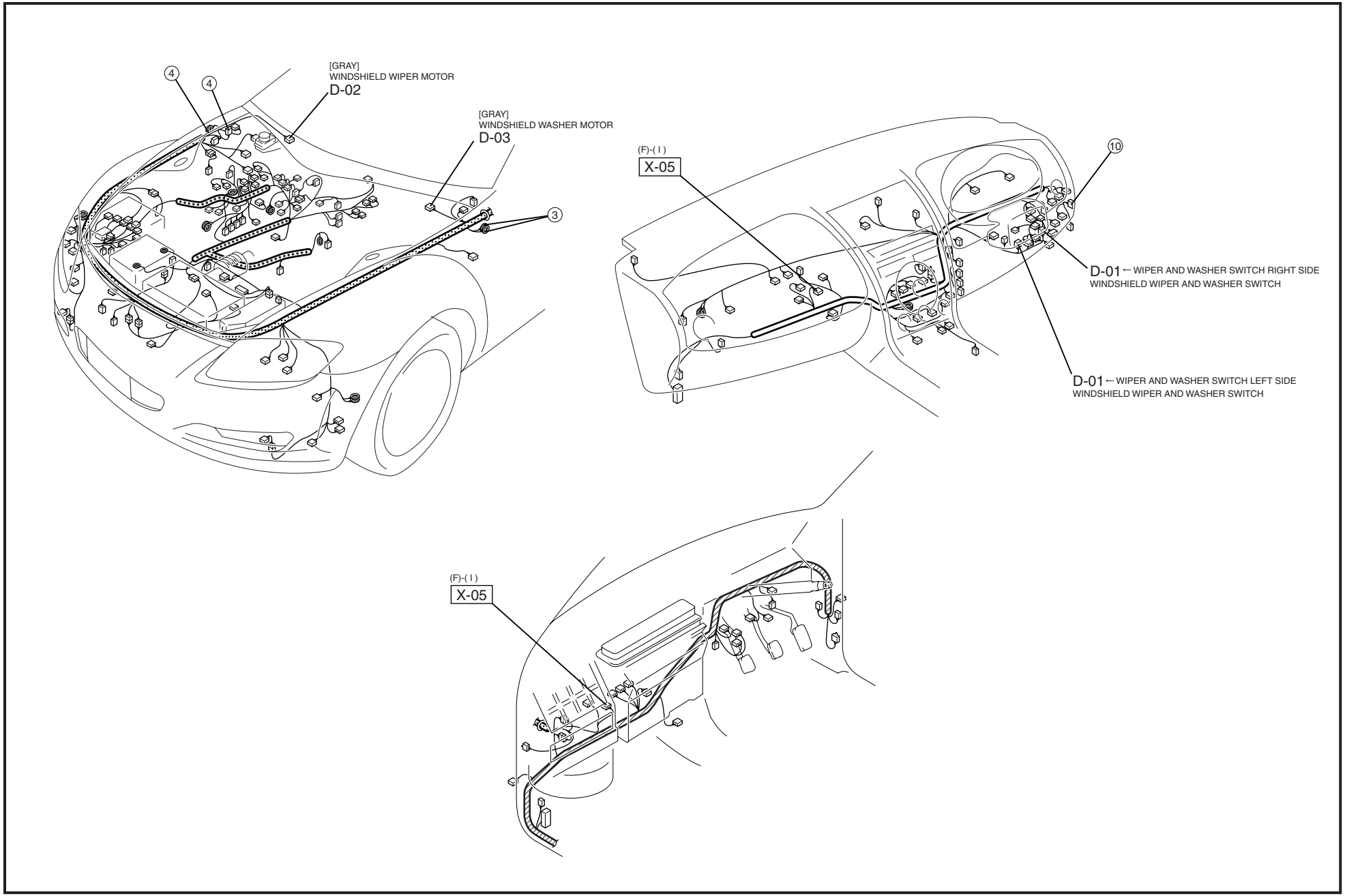

HEADLIGHT(DISCHARGE TYPE)

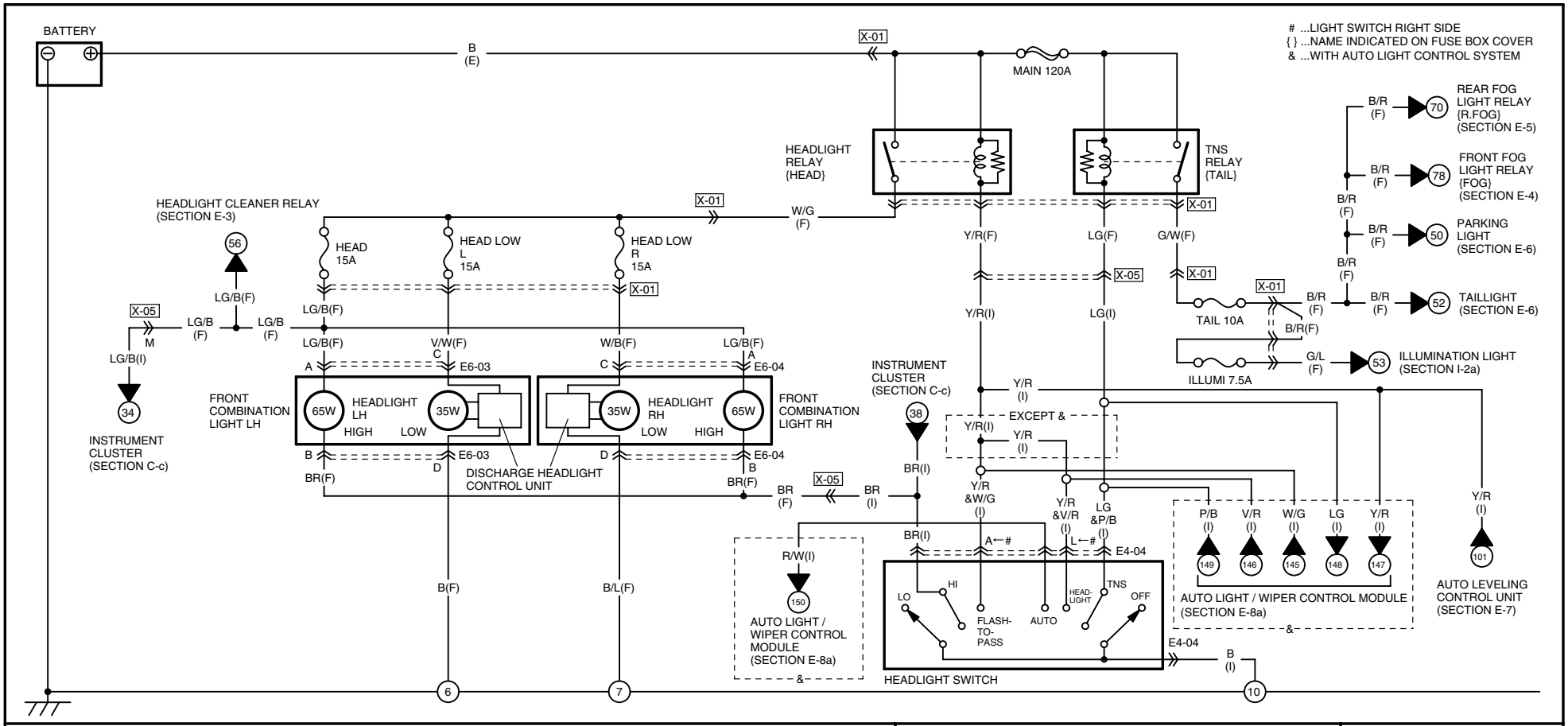

E4-04 HEADLIGHT SWITCH(I)

LIGHT SWITCH LEFT SIDE

W/G	BR	✳	✳	✳		B/R	B/Y	G/Y
✳	B	✳	P/B	V/R	R/W	G/Y	L/W	✳

A F

LIGHT SWITCH RIGHT SIDE

B/R	B/Y	G/Y		✳	✳	✳	BR	Y/R &W/G
✳	LG/B &L/W	LG &P/B	Y/R &V/R	✳ &R/W	✳	✳	✳	B

A L

E6-03 HEADLIGHT LH(F)

A C E G

LG/B	V/W	B/R	W/G
BR	B	L/Y	BR/W

B D F H

E6-04 HEADLIGHT RH(F)

A C E G

LG/B	W/B	B/R	Y/B
BR	B/L	L/Y	BR/W

B D F H

HARNESS SYMBOL: (F) (E) (R)

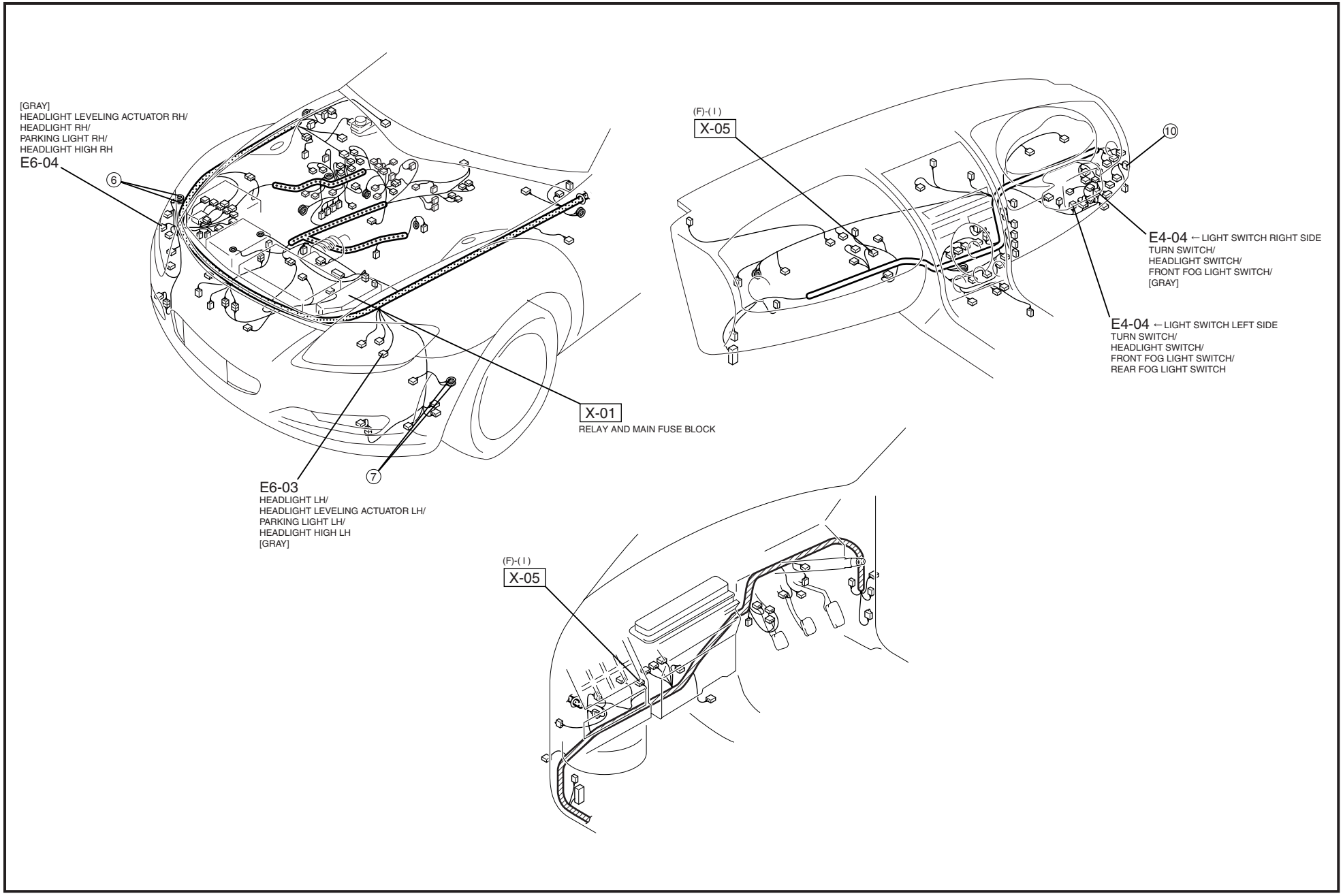

HEADLIGHT(HALOGEN TYPE)

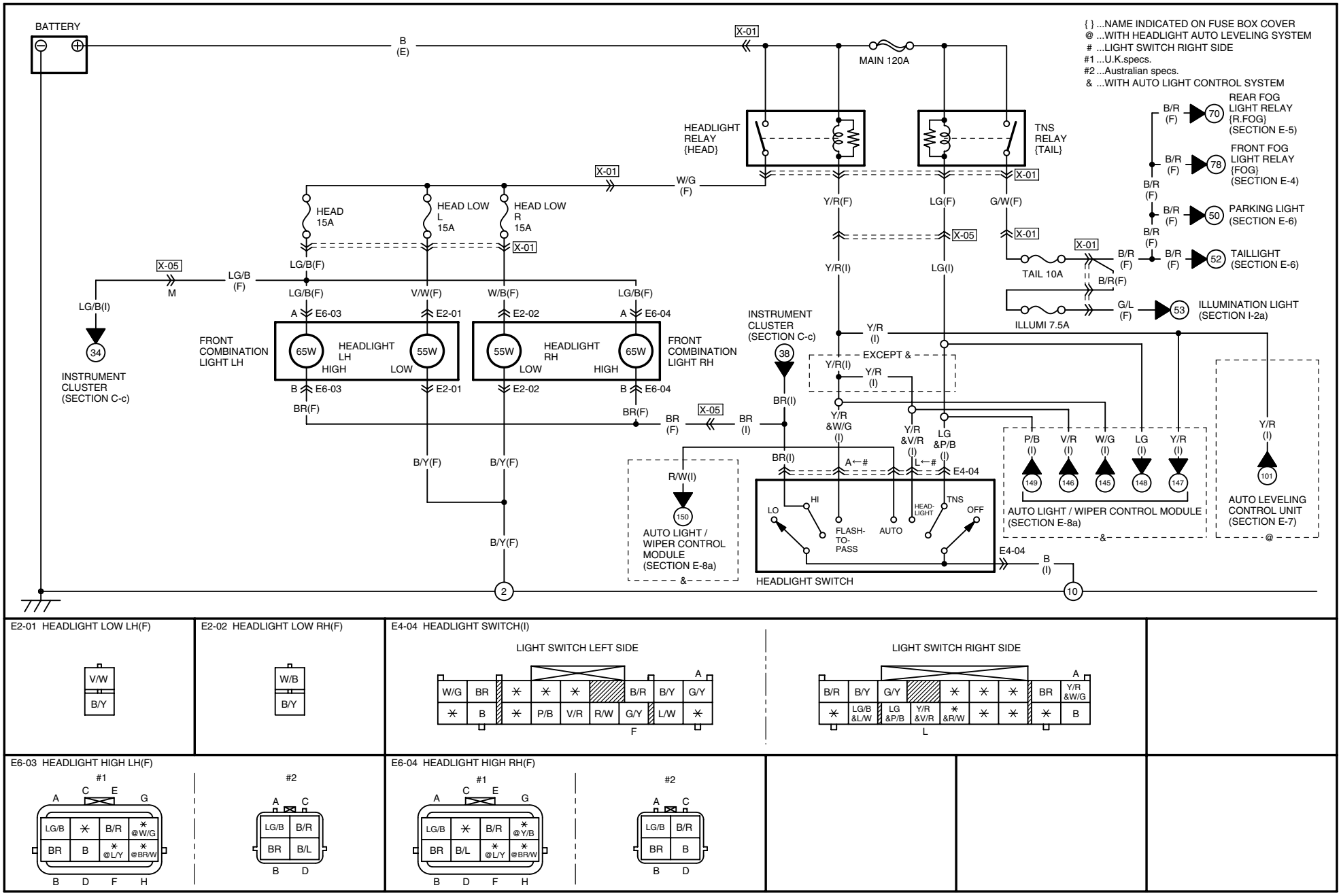

HARNESS SYMBOL: (F) (E) (R)

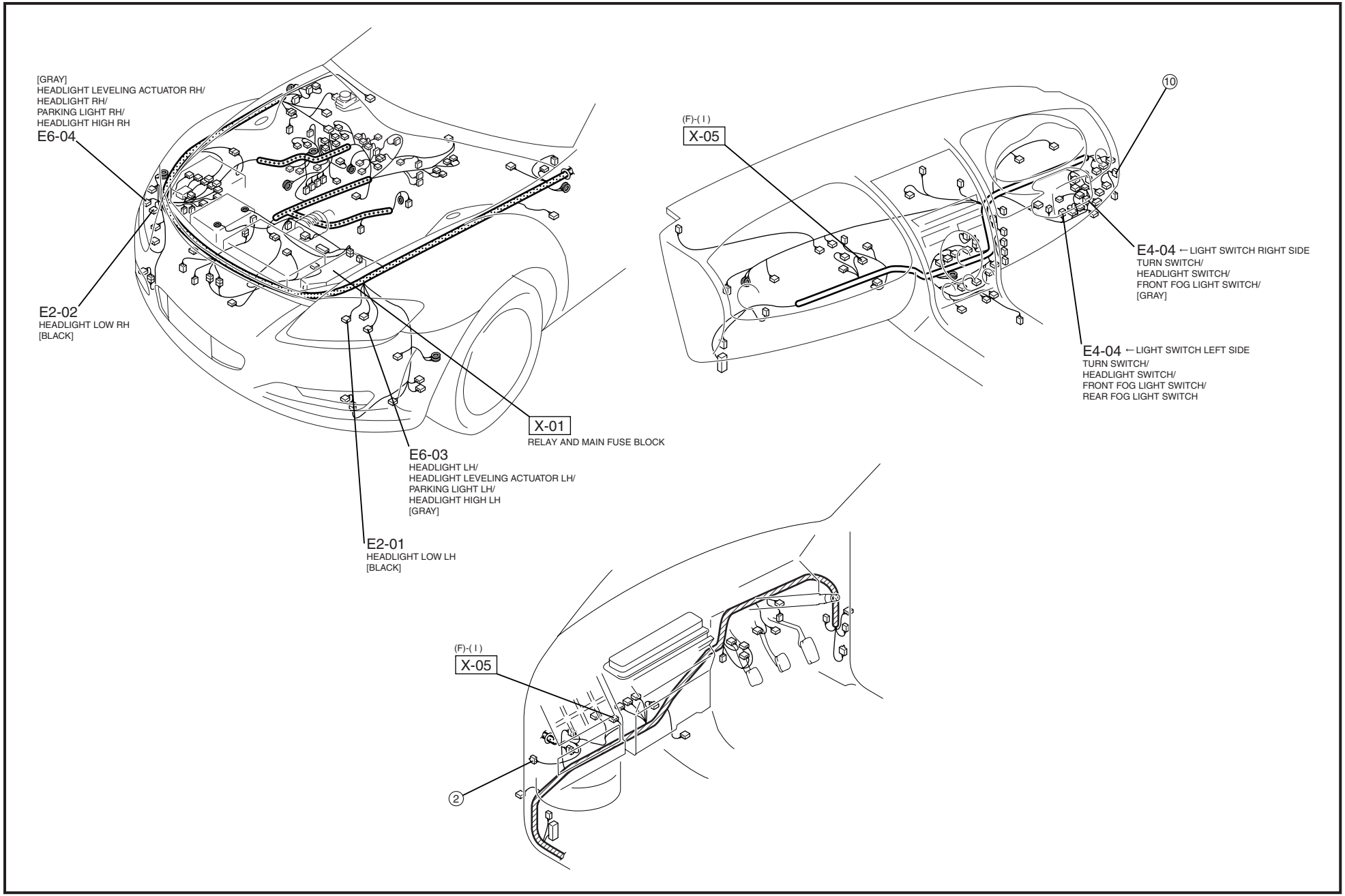

HEADLIGHT CLEANER SYSTEM

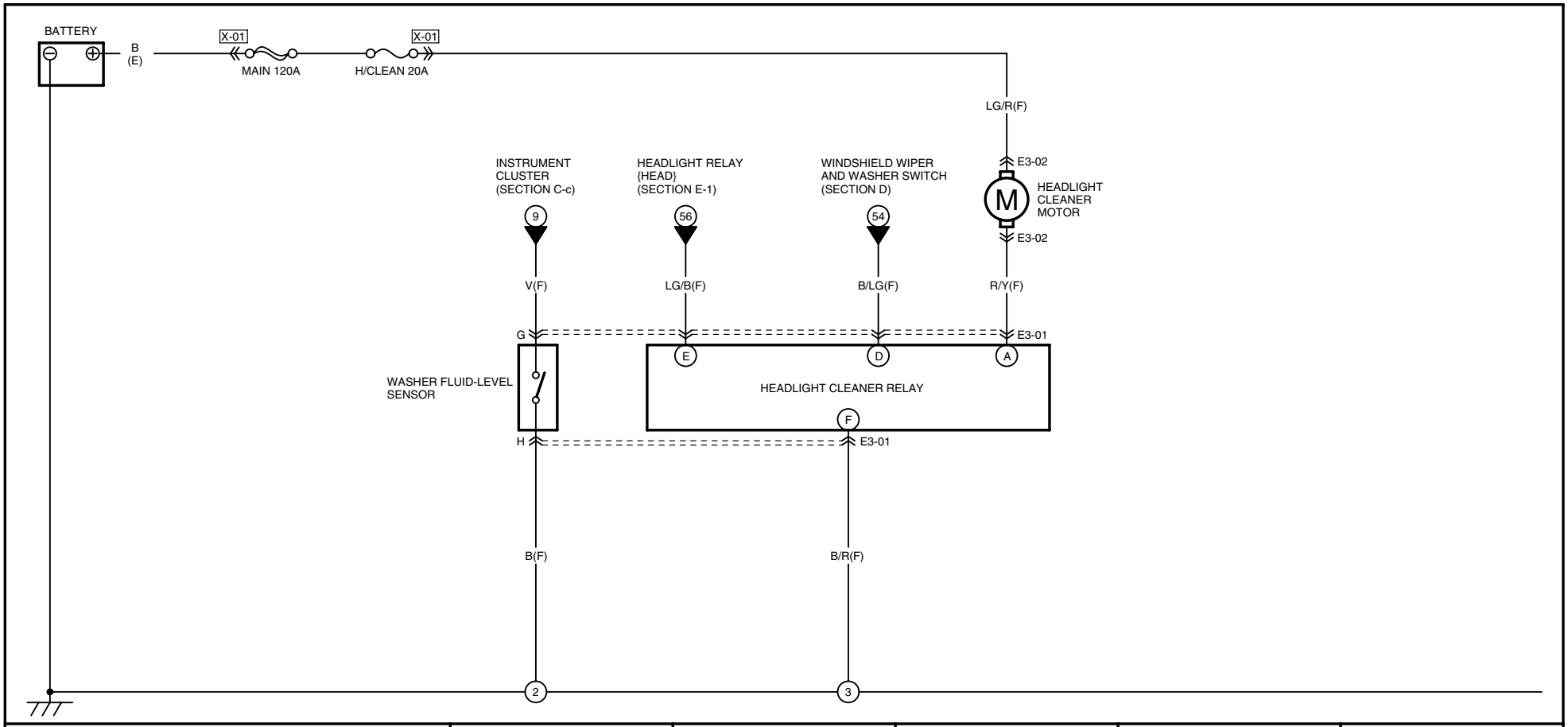

E3-01 HEADLIGHT CLEANER RELAY/
WASHER FLUID-LEVEL SENSOR(F)

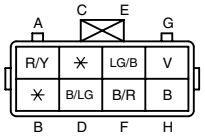

E3-02 HEADLIGHT CLEANER
MOTOR(F)

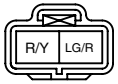

HARNESS SYMBOL: (F) (E) (R)

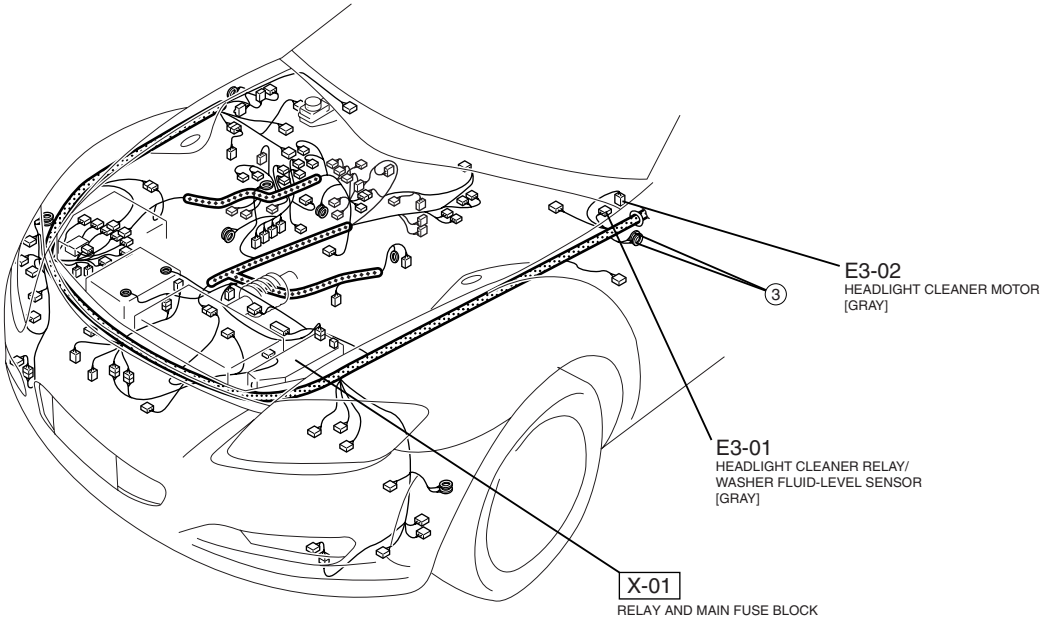

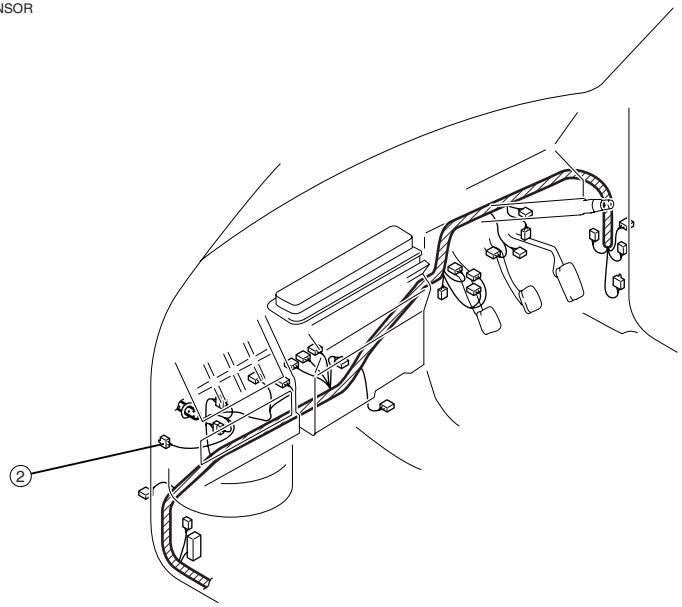

FRONT FOG LIGHT

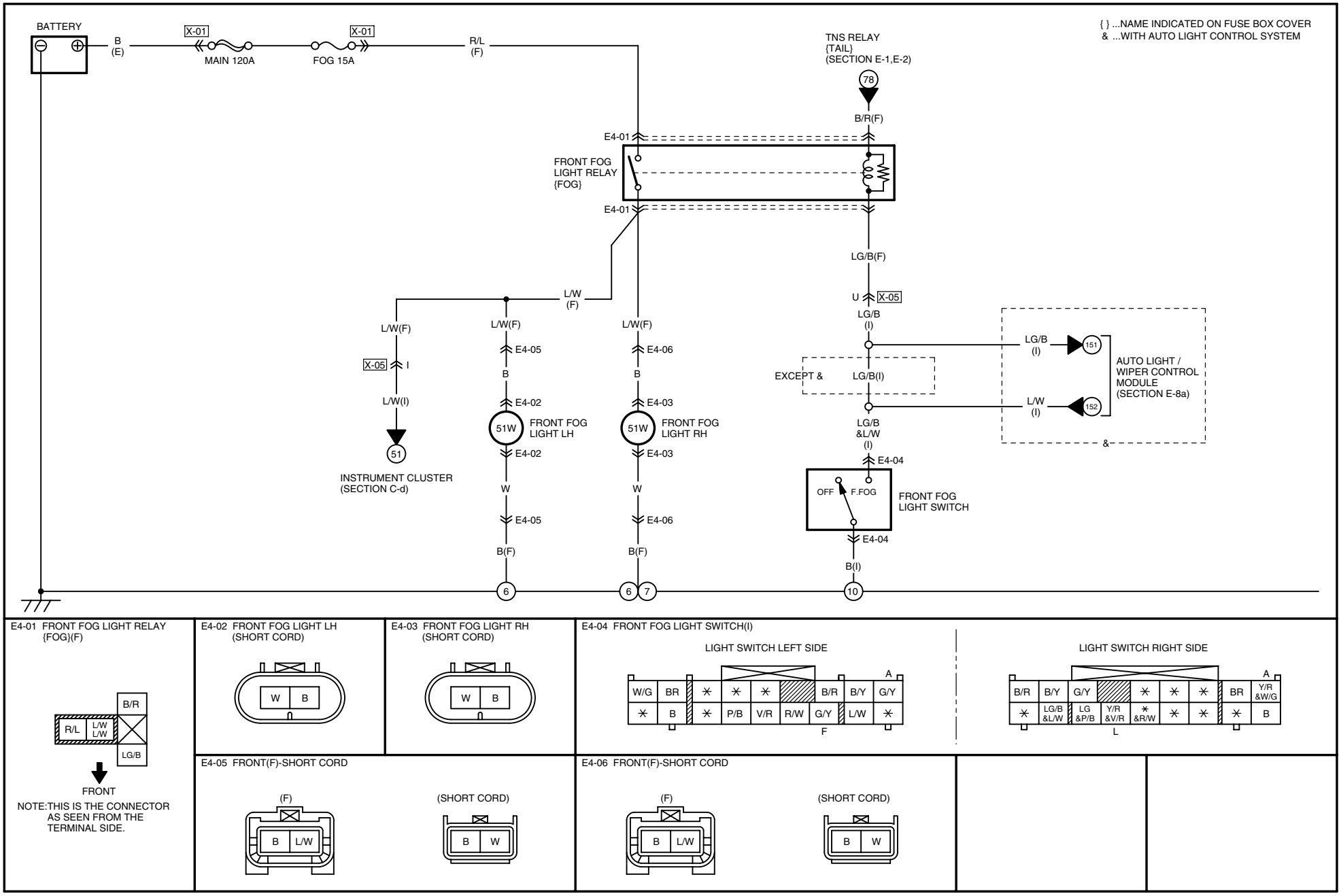

E4-01 FRONT FOG LIGHT RELAY {FOG}(F)

FRONT

NOTE:THIS IS THE CONNECTOR AS SEEN FROM THE TERMINAL SIDE.

E4-02 FRONT FOG LIGHT LH (SHORT CORD)

E4-03 FRONT FOG LIGHT RH (SHORT CORD)

E4-04 FRONT FOG LIGHT SWITCH(I)

LIGHT SWITCH LEFT SIDE

LIGHT SWITCH RIGHT SIDE

E4-05 FRONT(F)-SHORT CORD

E4-06 FRONT(F)-SHORT CORD

HARNESS SYMBOL: (F) (E) (R)

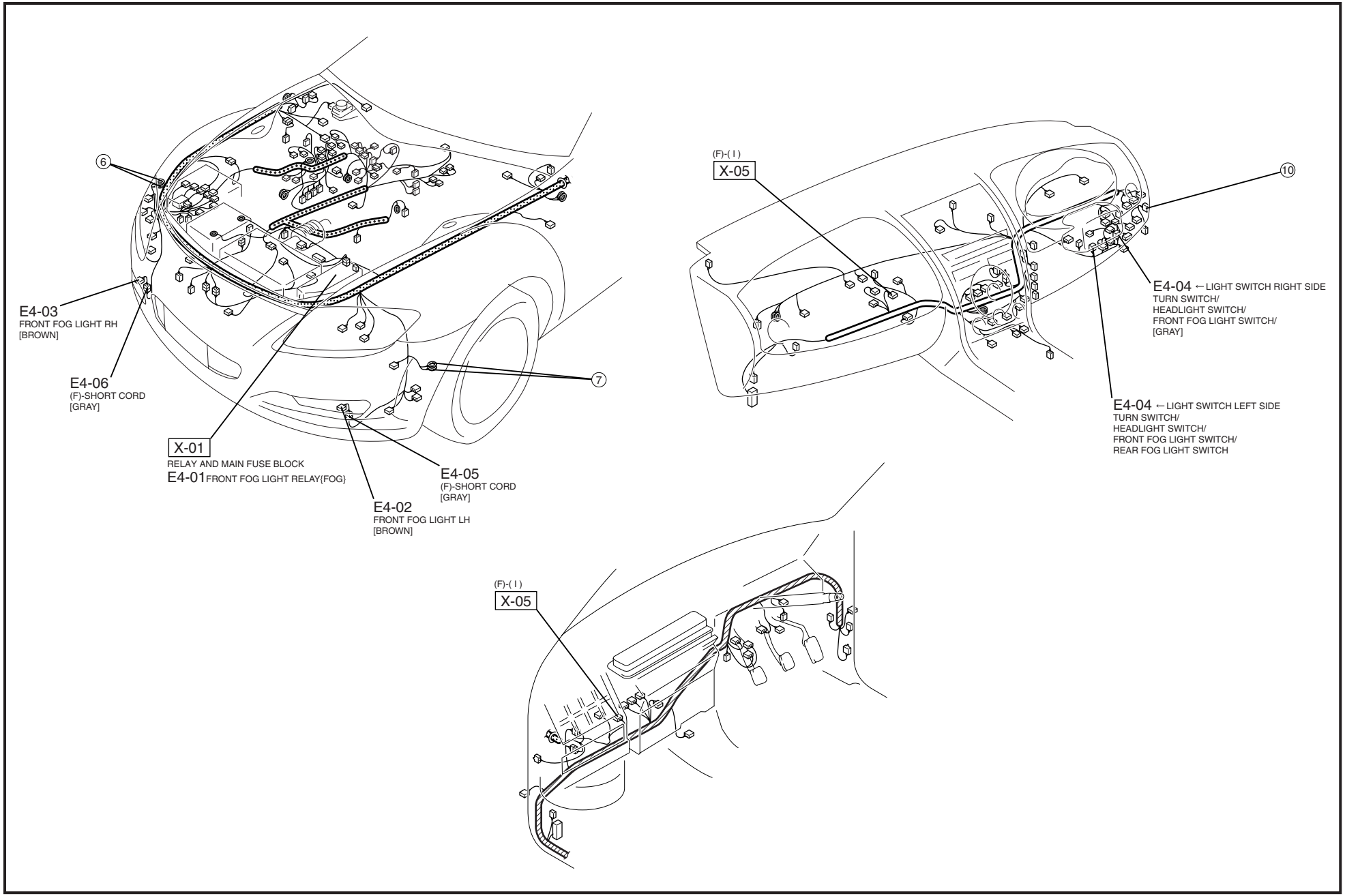

REAR FOG LIGHT

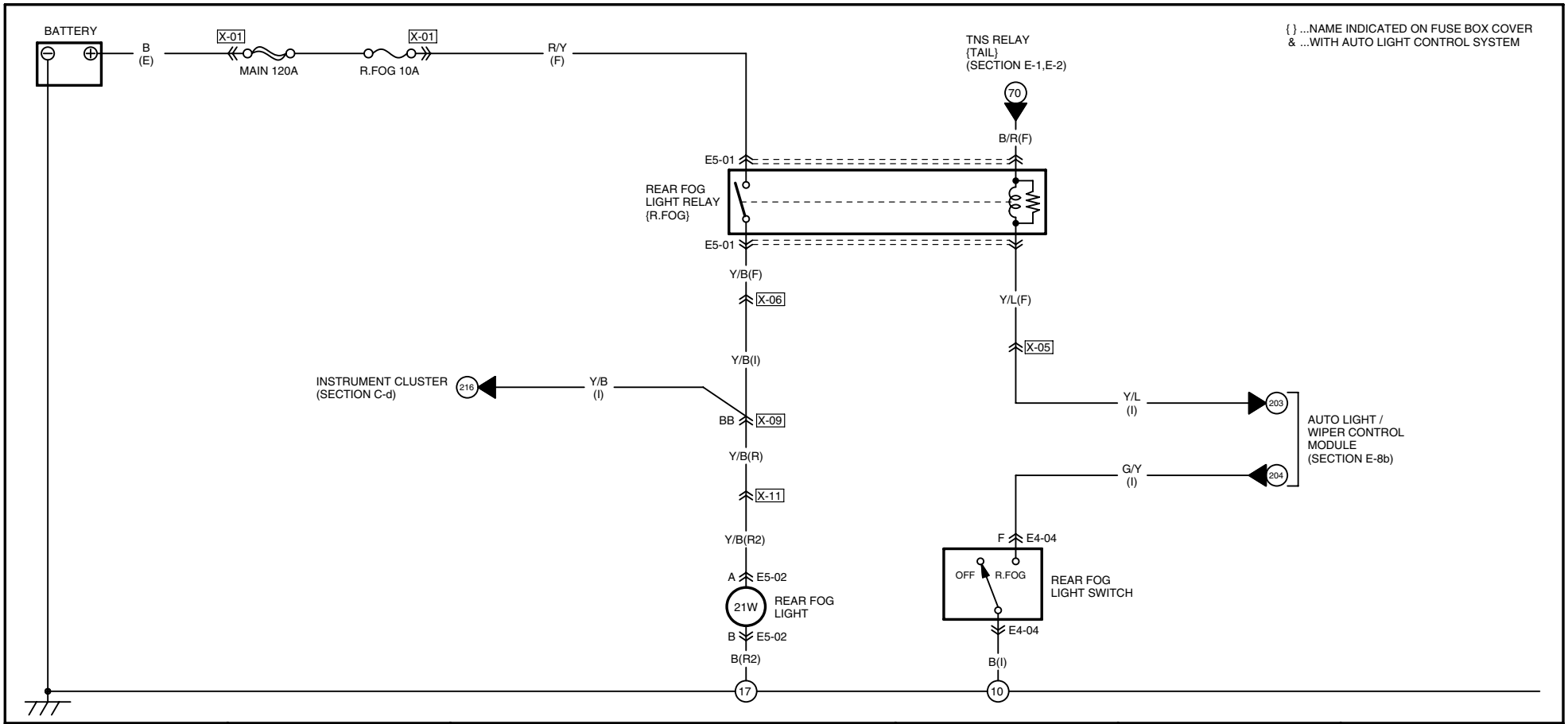

E5-01 REAR FOG LIGHT RELAY {R.FOG}(F)

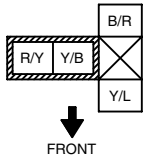

NOTE:THIS IS THE CONNECTOR AS SEEN FROM THE TERMINAL SIDE.

E5-02 REAR FOG LIGHT(R2)

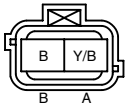

E4-04 REAR FOG LIGHT SWITCH(I)

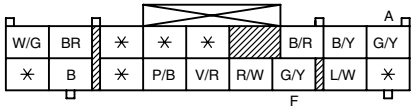

HARNESS SYMBOL: (F) (E) (R)

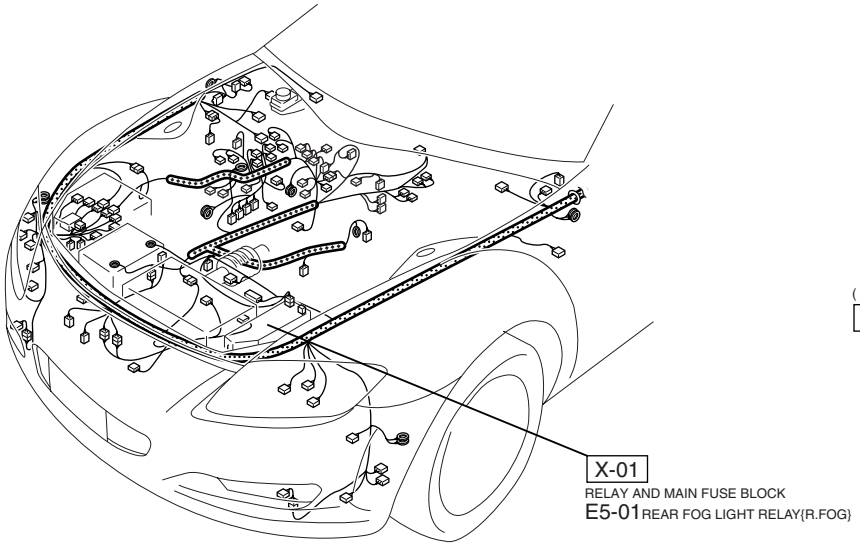

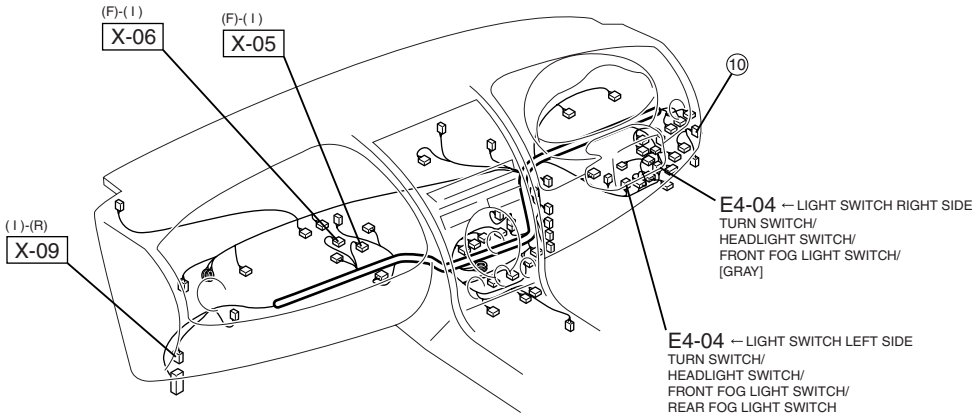

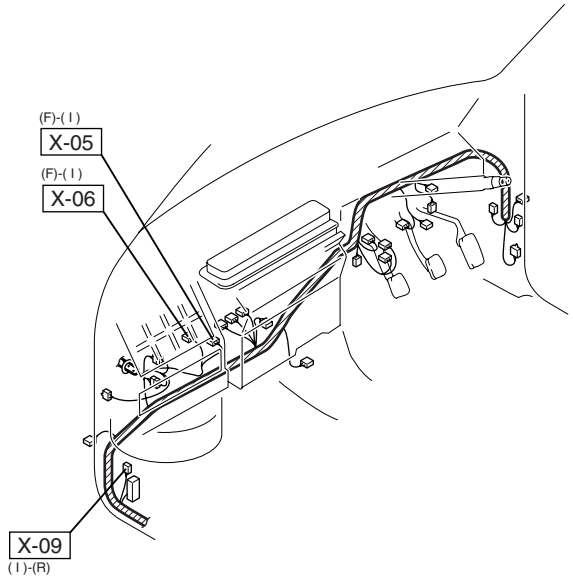

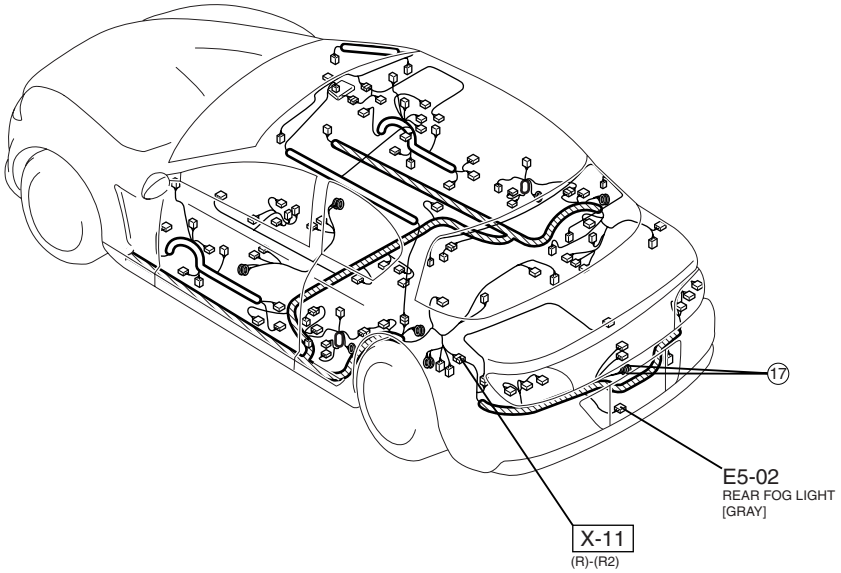

LICENSE PLATE LIGHT / PARKING LIGHT / TAILLIGHT

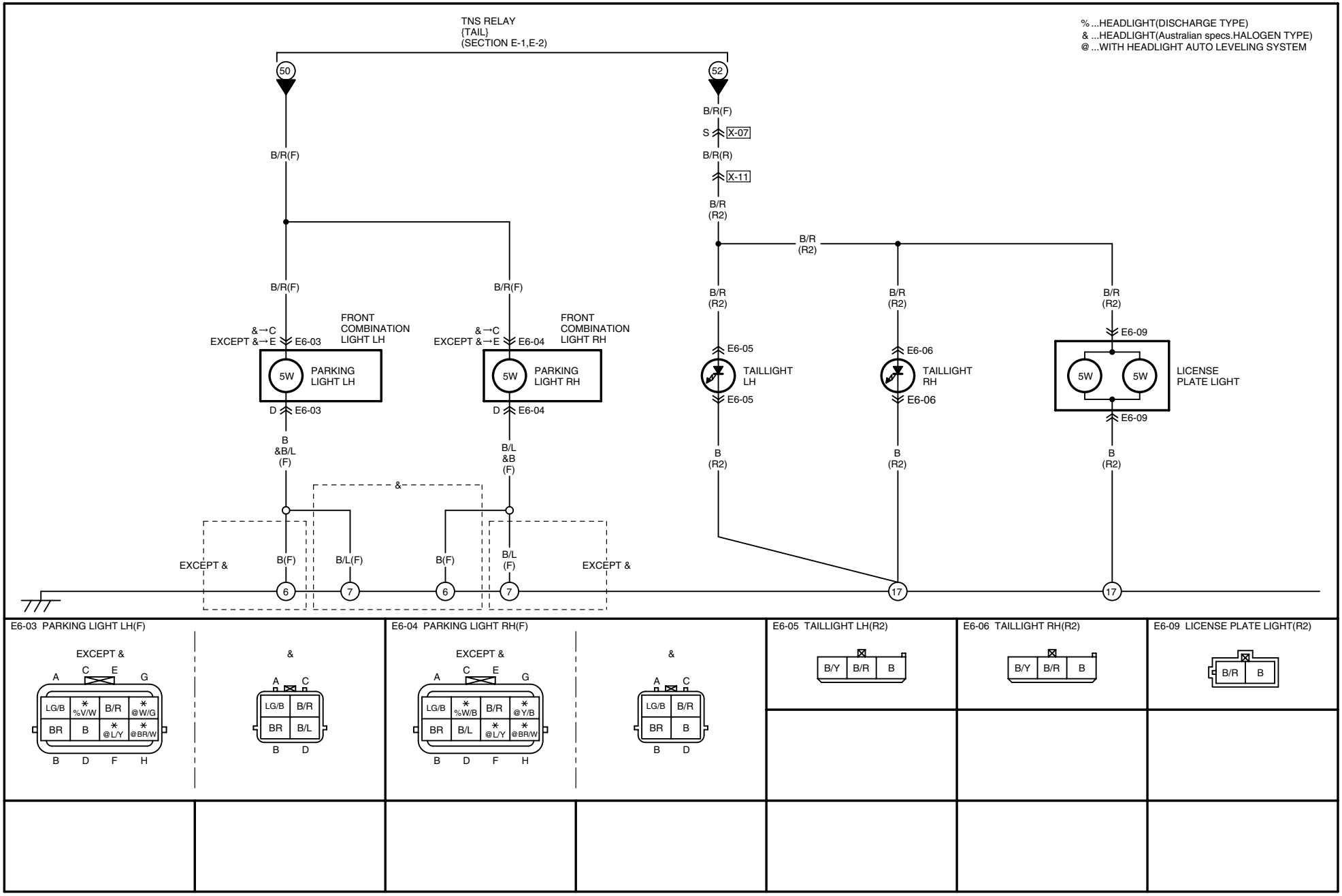

E6-03 PARKING LIGHT LH(F)

EXCEPT &

LG/B	* %V/W	B/R	* @W/G
BR	B	* @L/Y	* @BR/W

A C E G / B D F H

&

LG/B	B/R
BR	B/L

A C / B D

E6-04 PARKING LIGHT RH(F)

EXCEPT &

LG/B	* %W/B	B/R	* @Y/B
BR	B/L	* @L/Y	* @BR/W

A C E G / B D F H

&

LG/B	B/R
BR	B

A C / B D

E6-05 TAILLIGHT LH(R2)

B/Y	B/R	B

E6-06 TAILLIGHT RH(R2)

B/Y	B/R	B

E6-09 LICENSE PLATE LIGHT(R2)

B/R	B

HARNESS SYMBOL: (F) (E) (R)

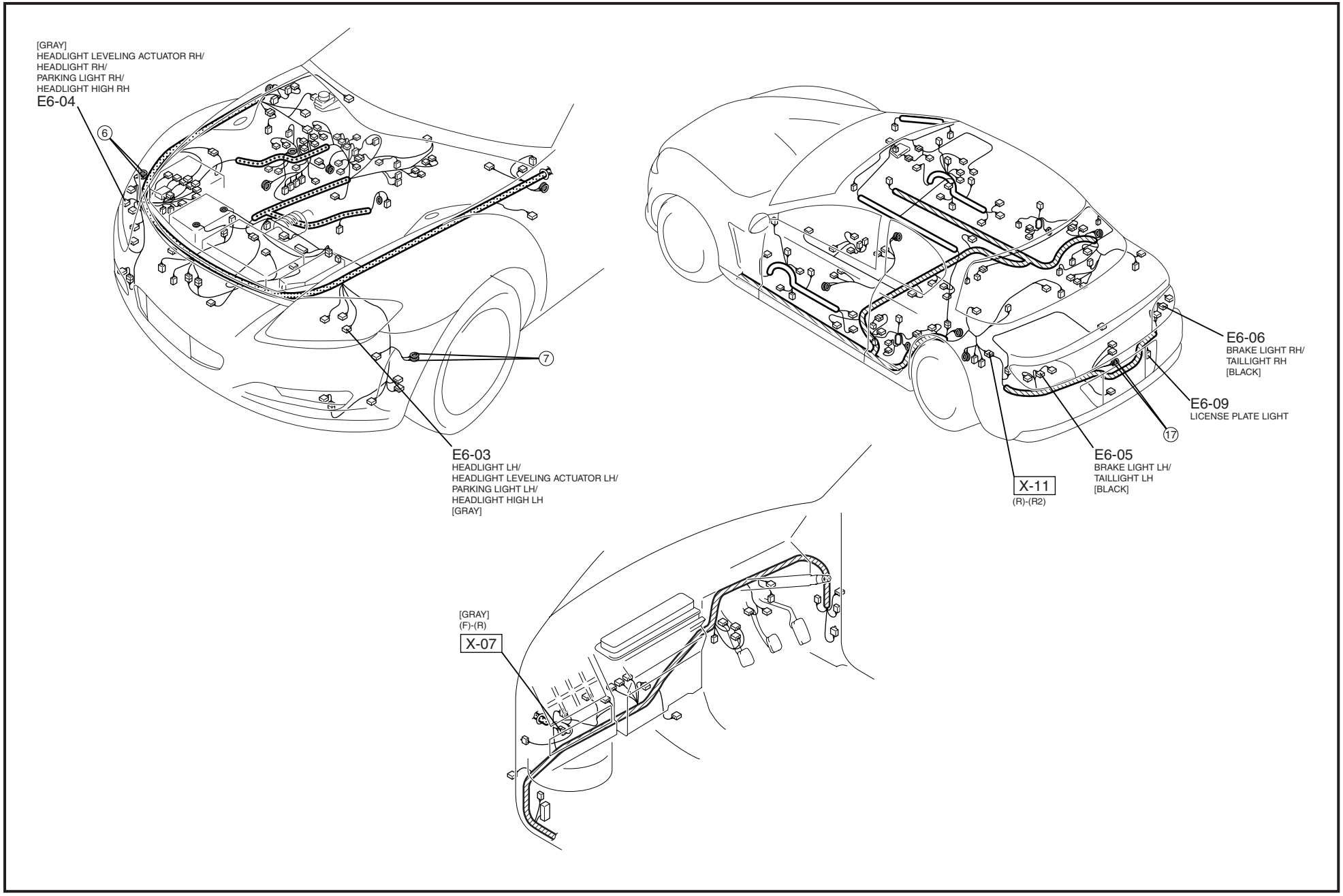

HEADLIGHT AUTO LEVELING SYSTEM

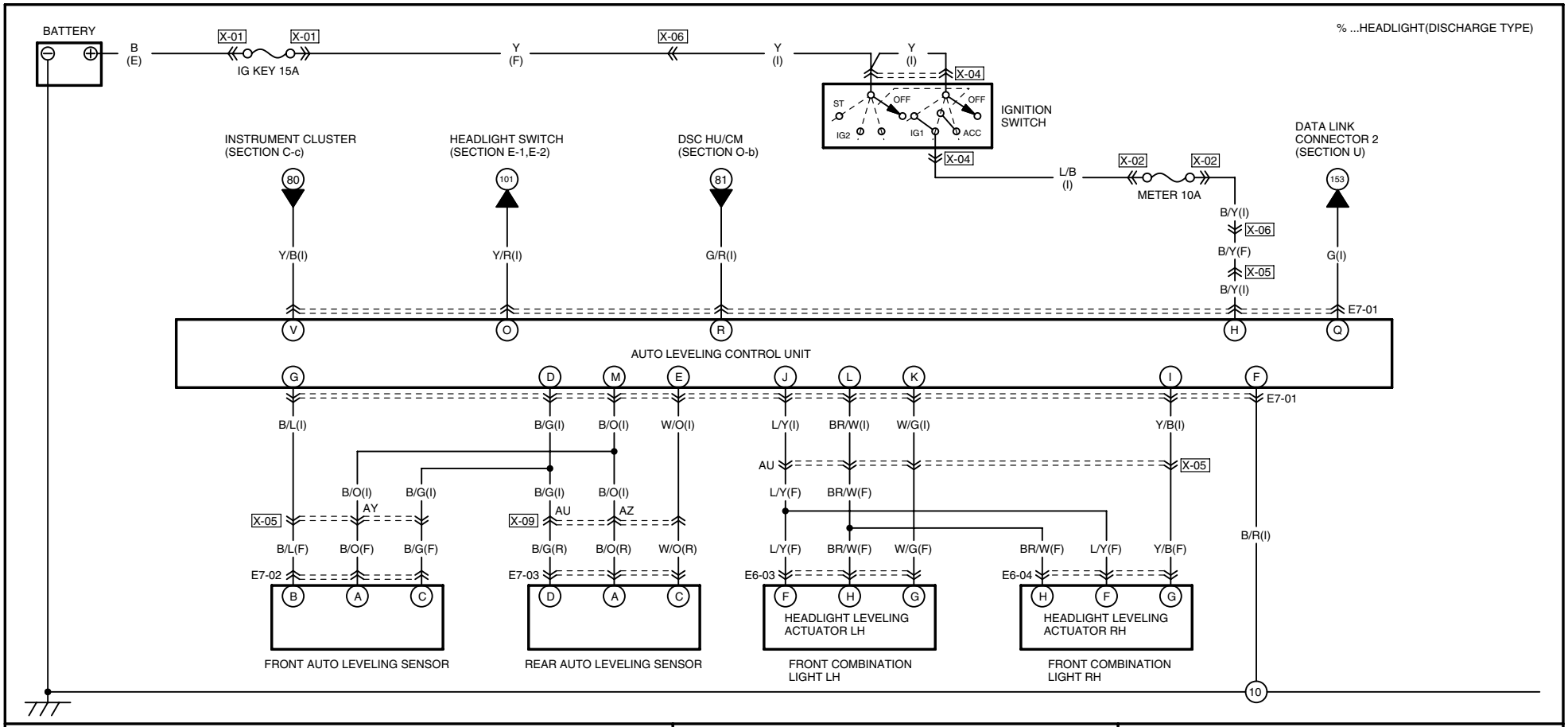

E7-01 AUTO LEVELING CONTROL UNIT(I)

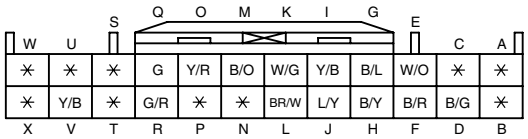

E7-02 FRONT AUTO LEVELING SENSOR(F)

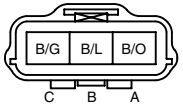

E7-03 REAR AUTO LEVELING SENSOR(R)

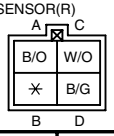

E6-03 HEADLIGHT LEVELING ACTUATOR LH(F)

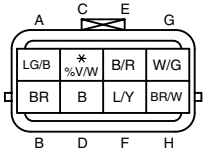

E6-04 HEADLIGHT LEVELING ACTUATOR RH(F)

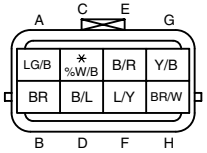

HARNESS SYMBOL: (F) (E) (R)

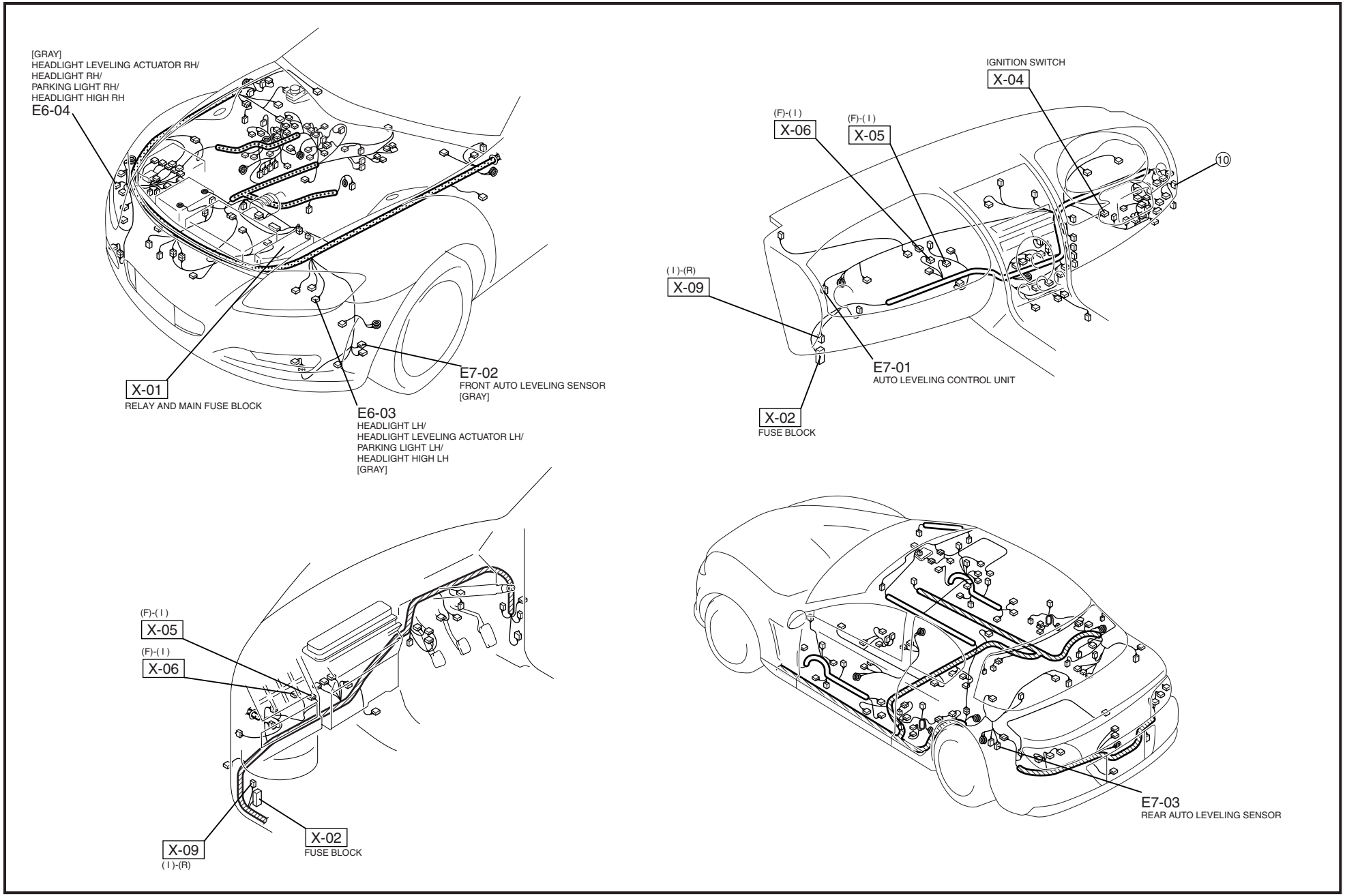

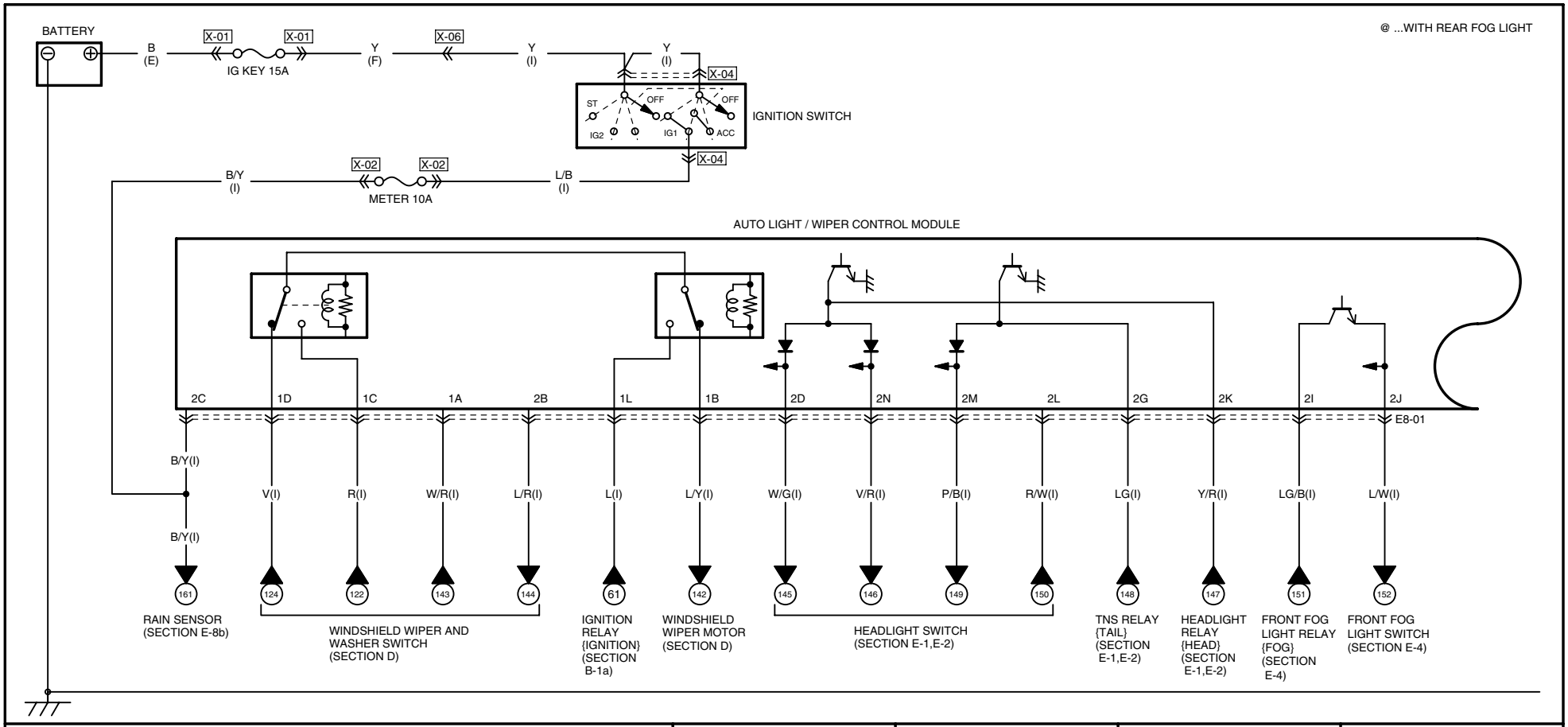

E8-01 AUTO LIGHT / WIPER CONTROL MODULE(I)

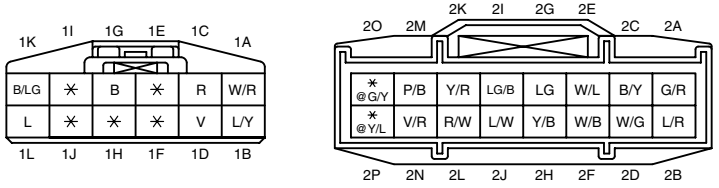

HARNESS SYMBOL: (F) (E) (R)

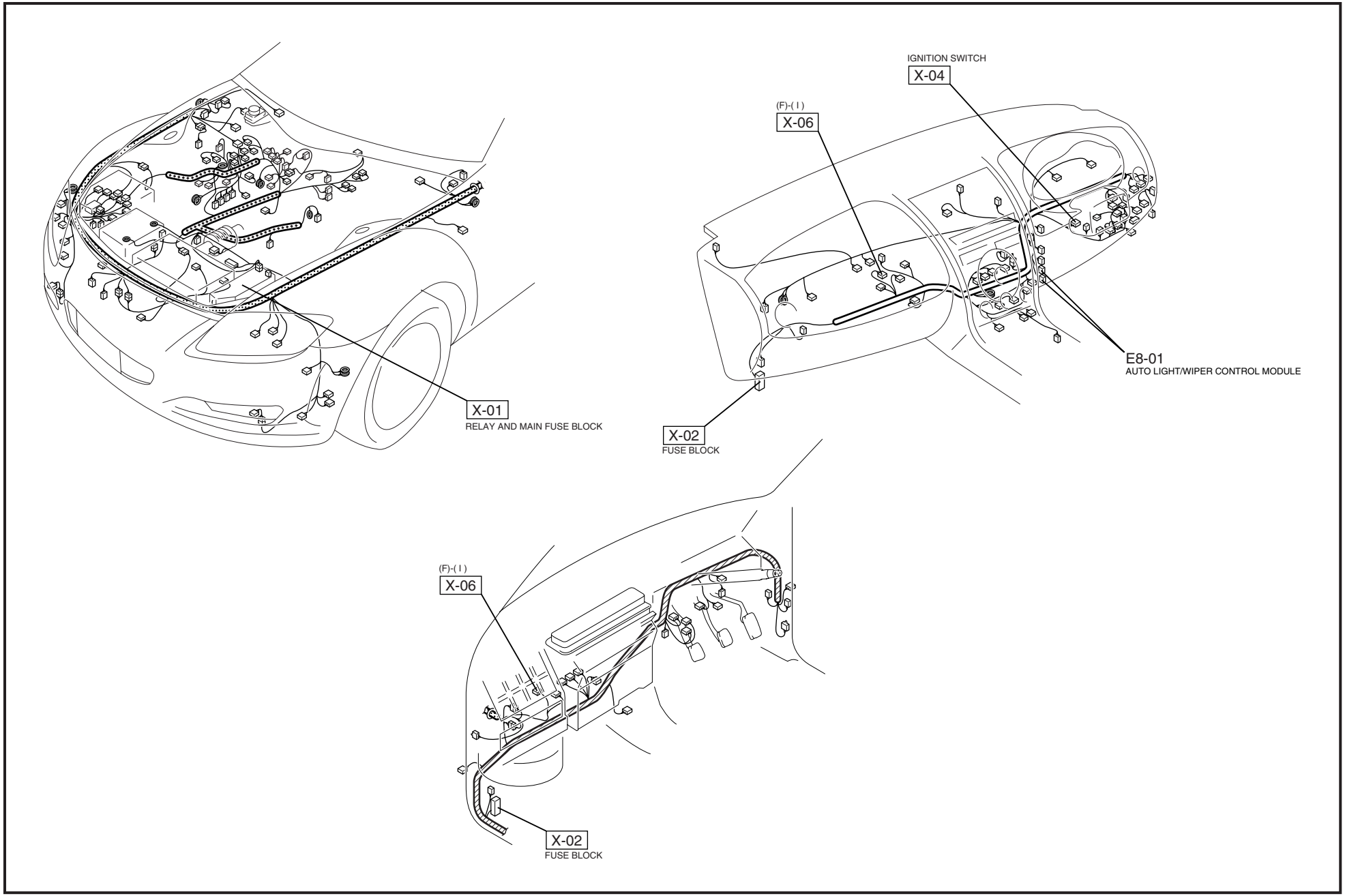

@ ...WITH REAR FOG LIGHT

AUTO LIGHT / WIPER CONTROL MODULE

1K 1G 2E 2H 2A 2F 2P 2O

E8-01

B/LG(I) B(I) W/L(I) Y/B(I) B/Y (I) G/R(I) W/B(I) Y/L(I) G/Y(I)

AM AC X-09

161 IGNITION SWITCH (IG1) (SECTION E-8a)

W/L(R) Y/B(R) B/Y(R)

X-13

W/L(IN2) Y/B(IN2) B/Y(IN2) B(IN2) B(R)

E8-02

123 WINDSHIELD WIPER AND WASHER SWITCH (SECTION D)

C D A B RAIN SENSOR

155 DSC HU/CM (SECTION O-b)

154 DATA LINK CONNECTOR 2 (SECTION U)

203 REAR FOG LIGHT RELAY {R.FOG} (SECTION E-5)

204 REAR FOG LIGHT SWITCH (SECTION E-5)

WITH REAR FOG LIGHT

10 16

E8-01 AUTO LIGHT / WIPER CONTROL MODULE(I)

1K	1I	1G	1E	1C	1A
B/LG	*	B	*	R	W/R
L	*	*	*	V	L/Y
1L	1J	1H	1F	1D	1B

2O	2M	2K	2I	2G	2E	2C	2A
* @G/Y	P/B	Y/R	LG/B	LG	W/L	B/Y	G/R
* @Y/L	V/R	R/W	L/W	Y/B	W/B	W/G	L/R
2P	2N	2L	2J	2H	2F	2D	2B

E8-02 RAIN SENSOR(IN2)

A	B/Y
B	B
C	W/L
D	Y/B

HARNESS SYMBOL: (F) (E) (R)

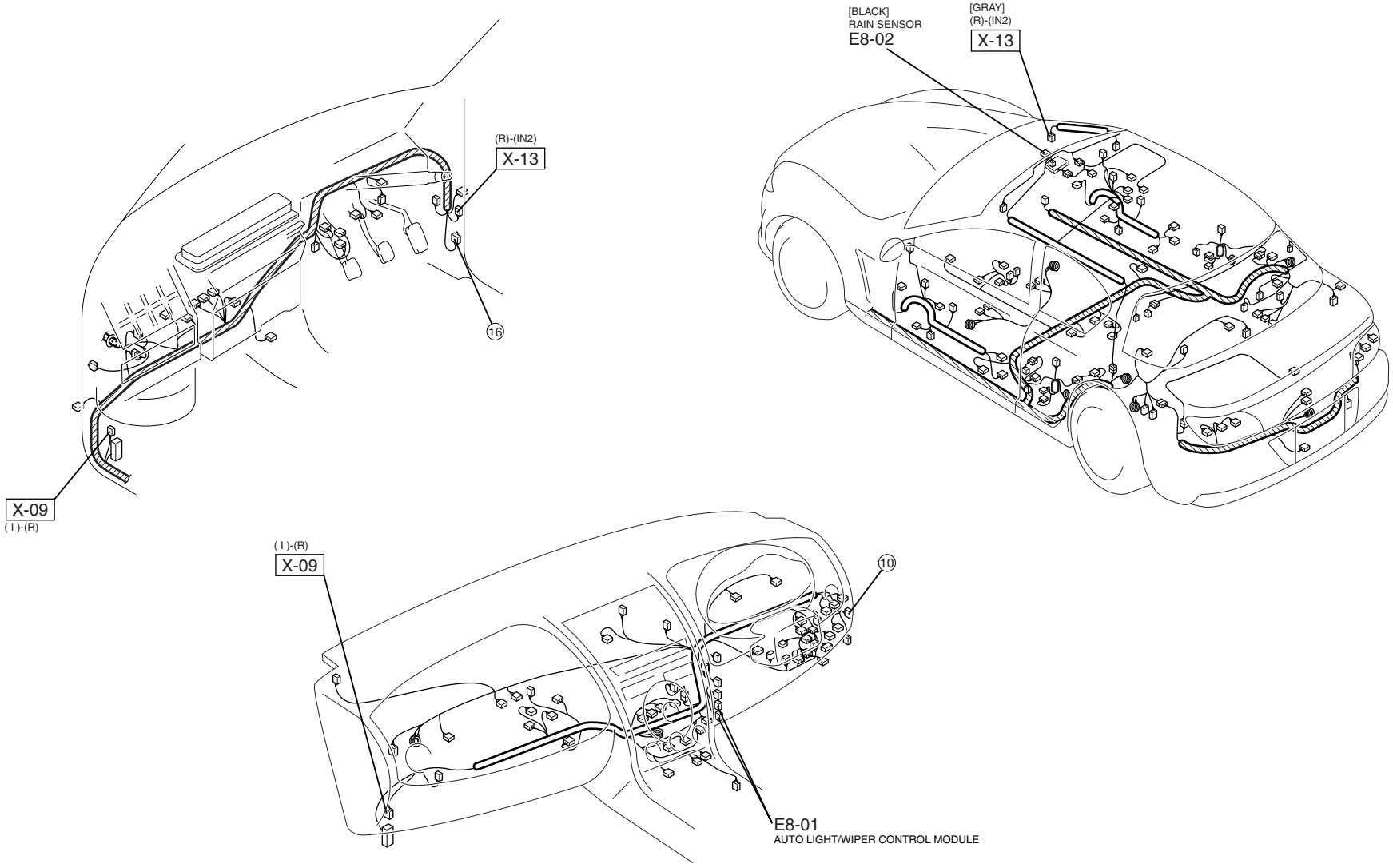

TURN AND HAZARD WARNING LIGHT

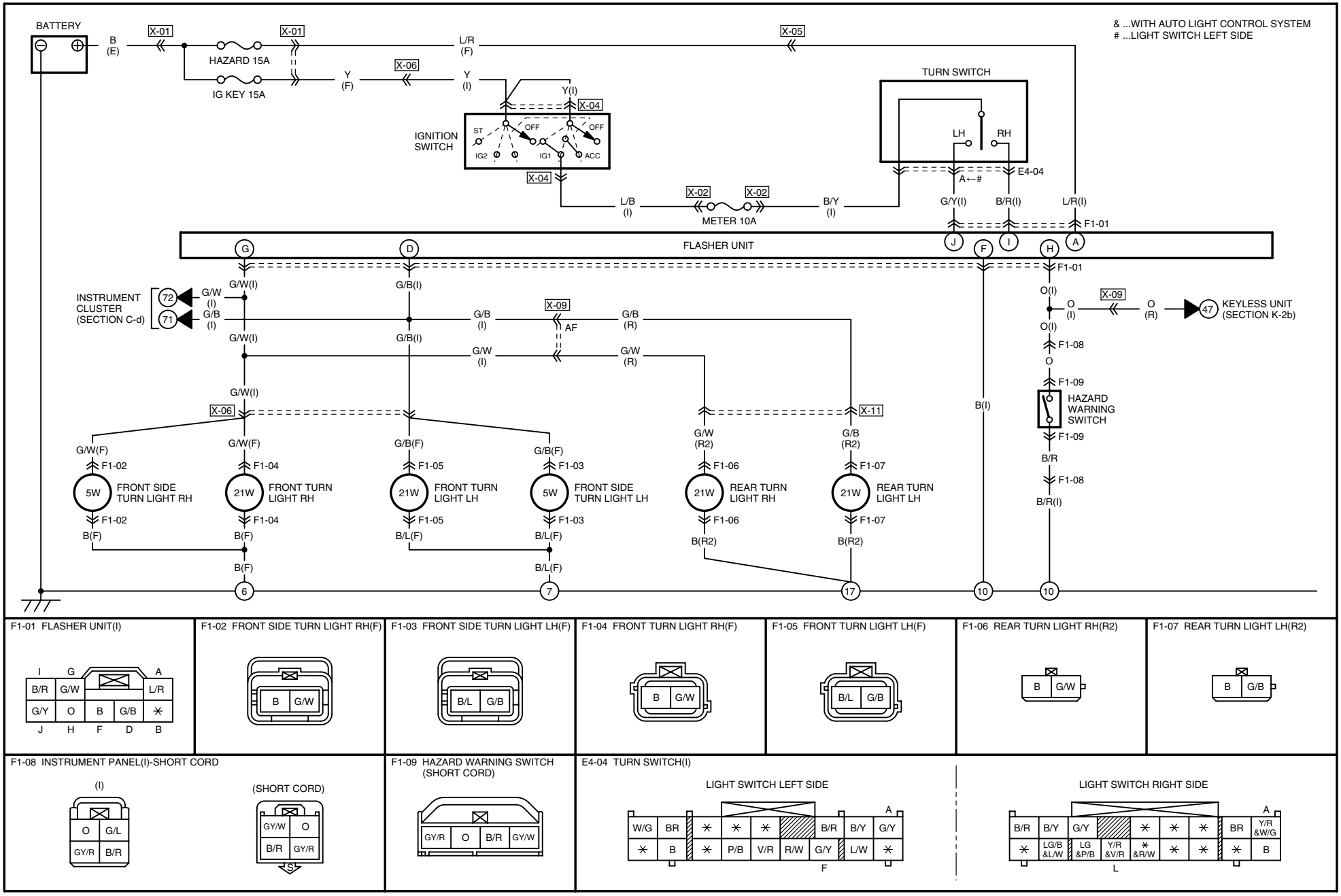

F1-01 FLASHER UNIT(I)

F1-02 FRONT SIDE TURN LIGHT RH(F)

F1-03 FRONT SIDE TURN LIGHT LH(F)

F1-04 FRONT TURN LIGHT RH(F)

F1-05 FRONT TURN LIGHT LH(F)

F1-06 REAR TURN LIGHT RH(R2)

F1-07 REAR TURN LIGHT LH(R2)

F1-08 INSTRUMENT PANEL(I)-SHORT CORD

F1-09 HAZARD WARNING SWITCH (SHORT CORD)

E4-04 TURN SWITCH(I)

LIGHT SWITCH LEFT SIDE

LIGHT SWITCH RIGHT SIDE

HARNESS SYMBOL: (F) (E) (R)

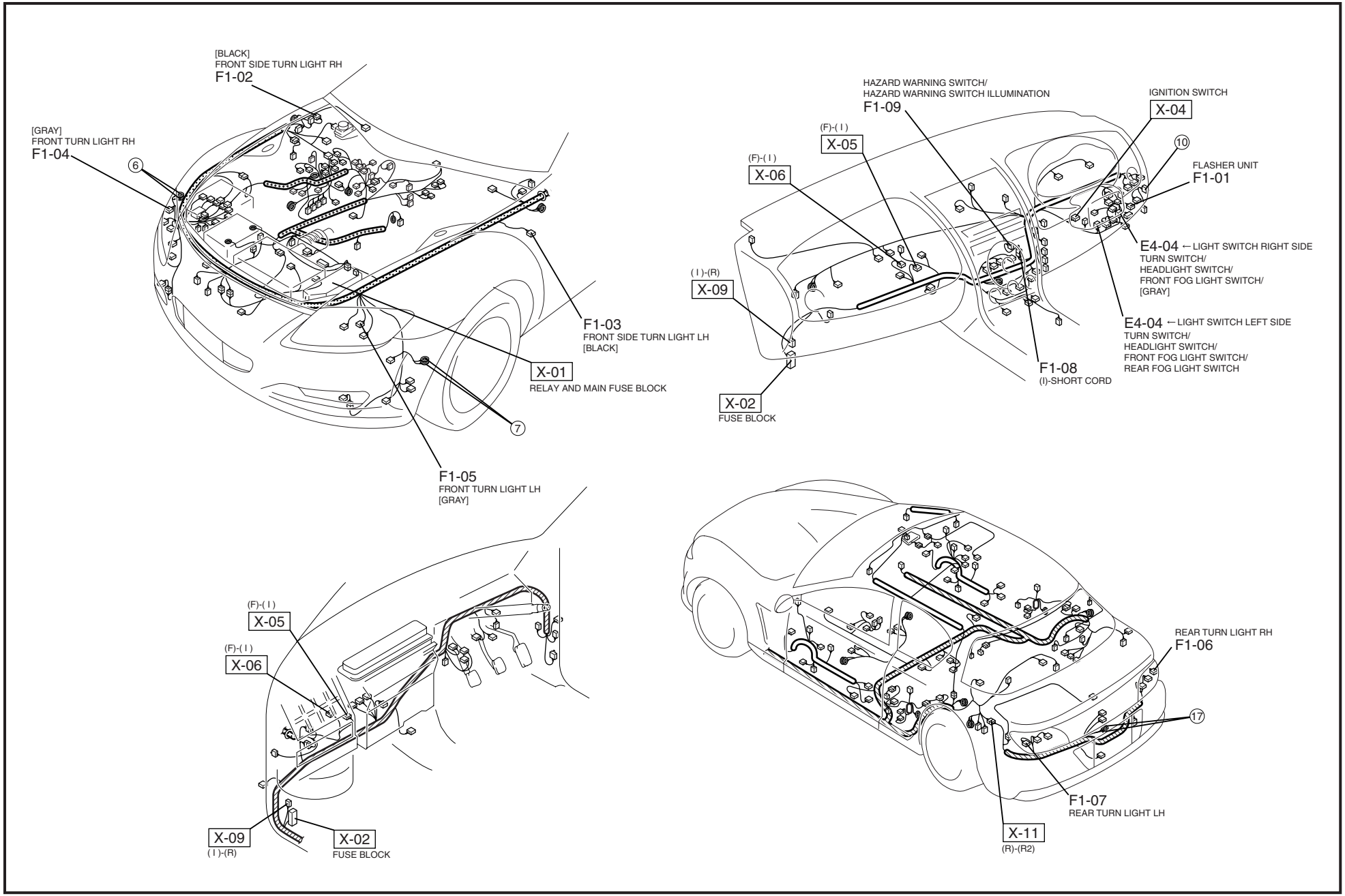

BACK-UP LIGHT

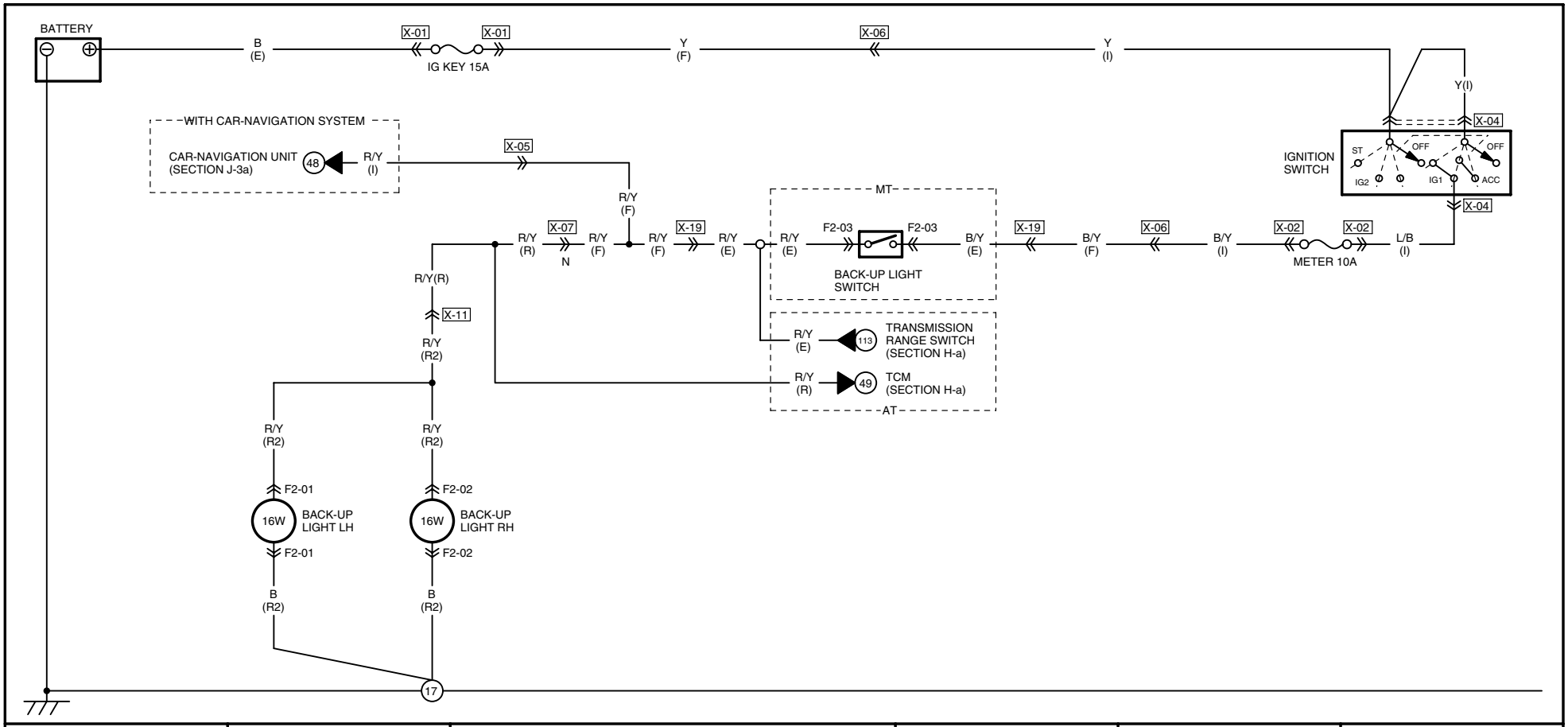

F2-01 BACK-UP LIGHT LH(R2)	F2-02 BACK-UP LIGHT RH(R2)	F2-03 BACK-UP LIGHT SWITCH(E)				
B / R/Y	B / R/Y	(5MT) B/Y / R/Y	(6MT) B/Y / R/Y			

HARNESS SYMBOL: (F) (E) (R)

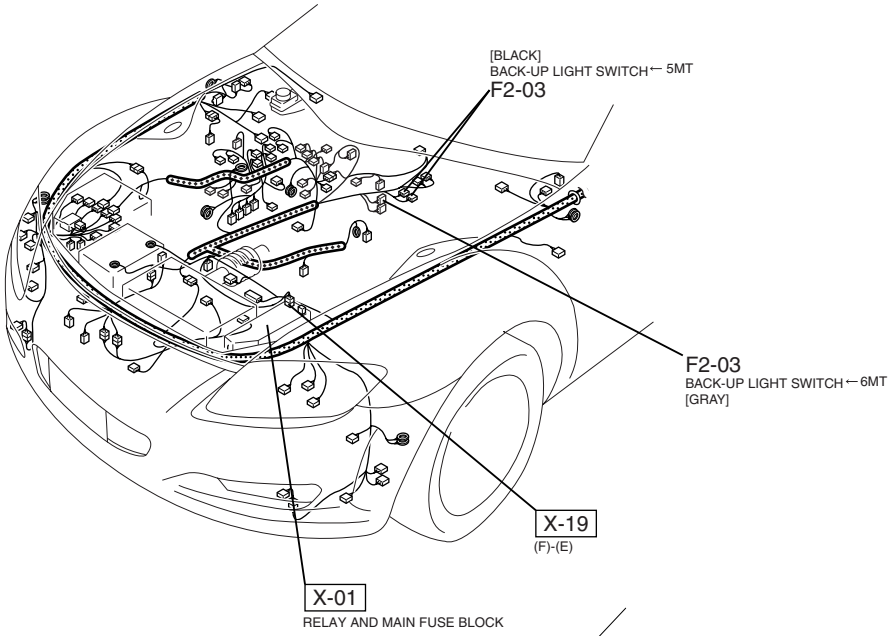

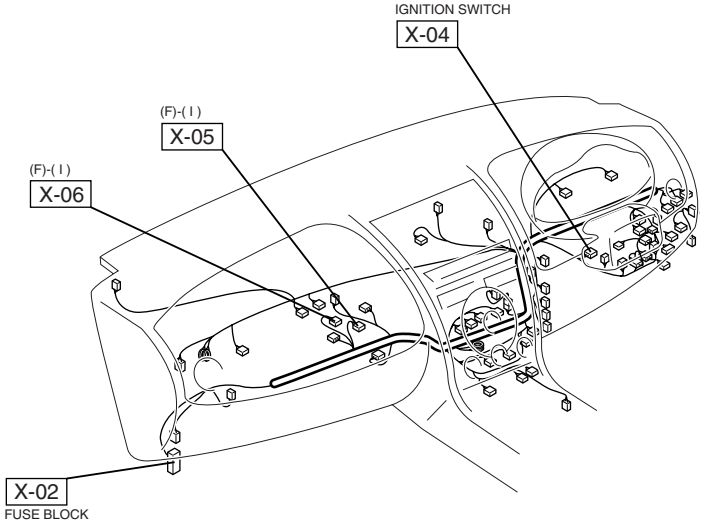

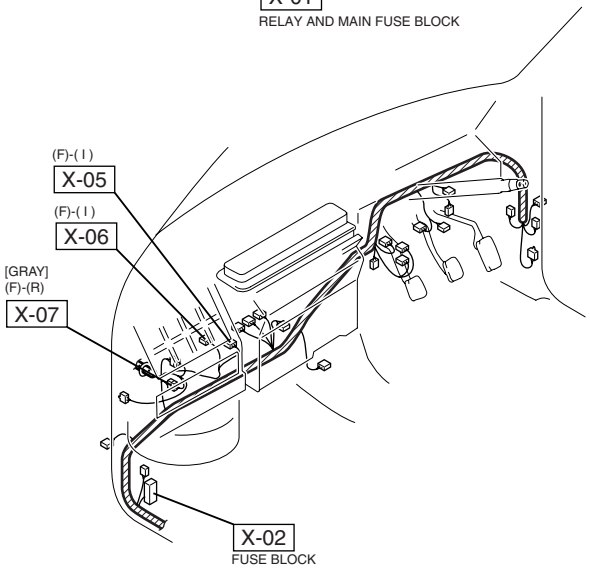

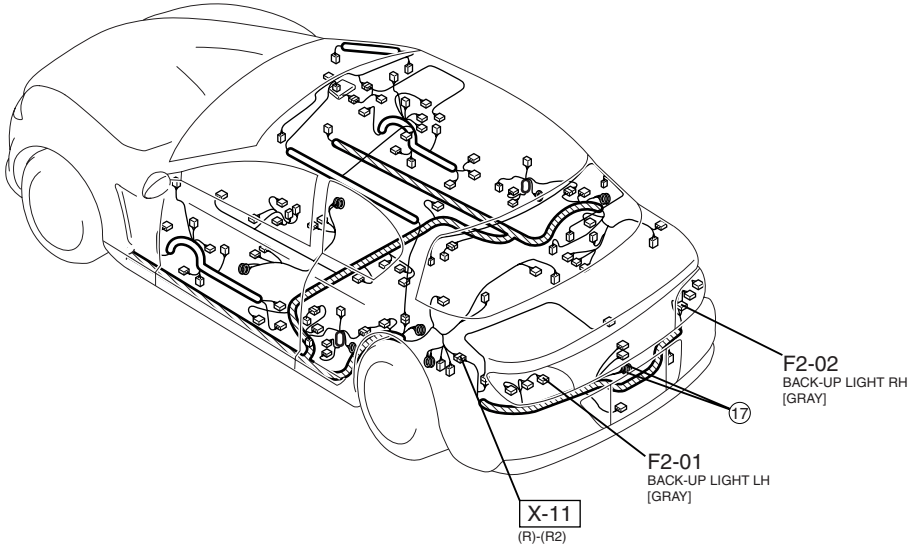

BRAKE LIGHT / HIGH-MOUNT BRAKE LIGHT / HORN

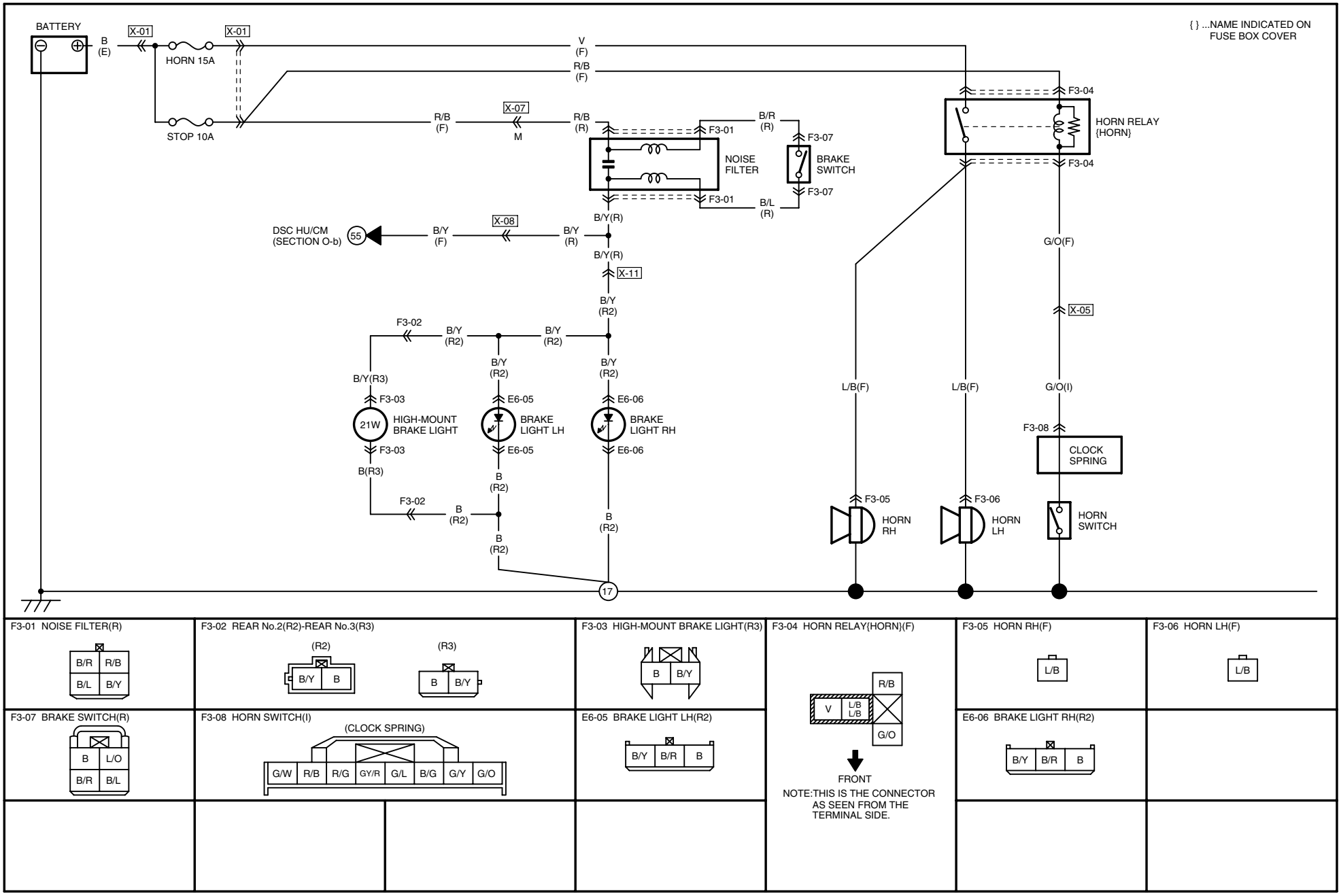

F3-01 NOISE FILTER(R)

F3-02 REAR No.2(R2)-REAR No.3(R3)

F3-03 HIGH-MOUNT BRAKE LIGHT(R3)

F3-04 HORN RELAY{HORN}(F)

FRONT

NOTE:THIS IS THE CONNECTOR AS SEEN FROM THE TERMINAL SIDE.

F3-05 HORN RH(F)

F3-06 HORN LH(F)

F3-07 BRAKE SWITCH(R)

F3-08 HORN SWITCH(I)

E6-05 BRAKE LIGHT LH(R2)

E6-06 BRAKE LIGHT RH(R2)

HARNESS SYMBOL: (F) (E) (R)

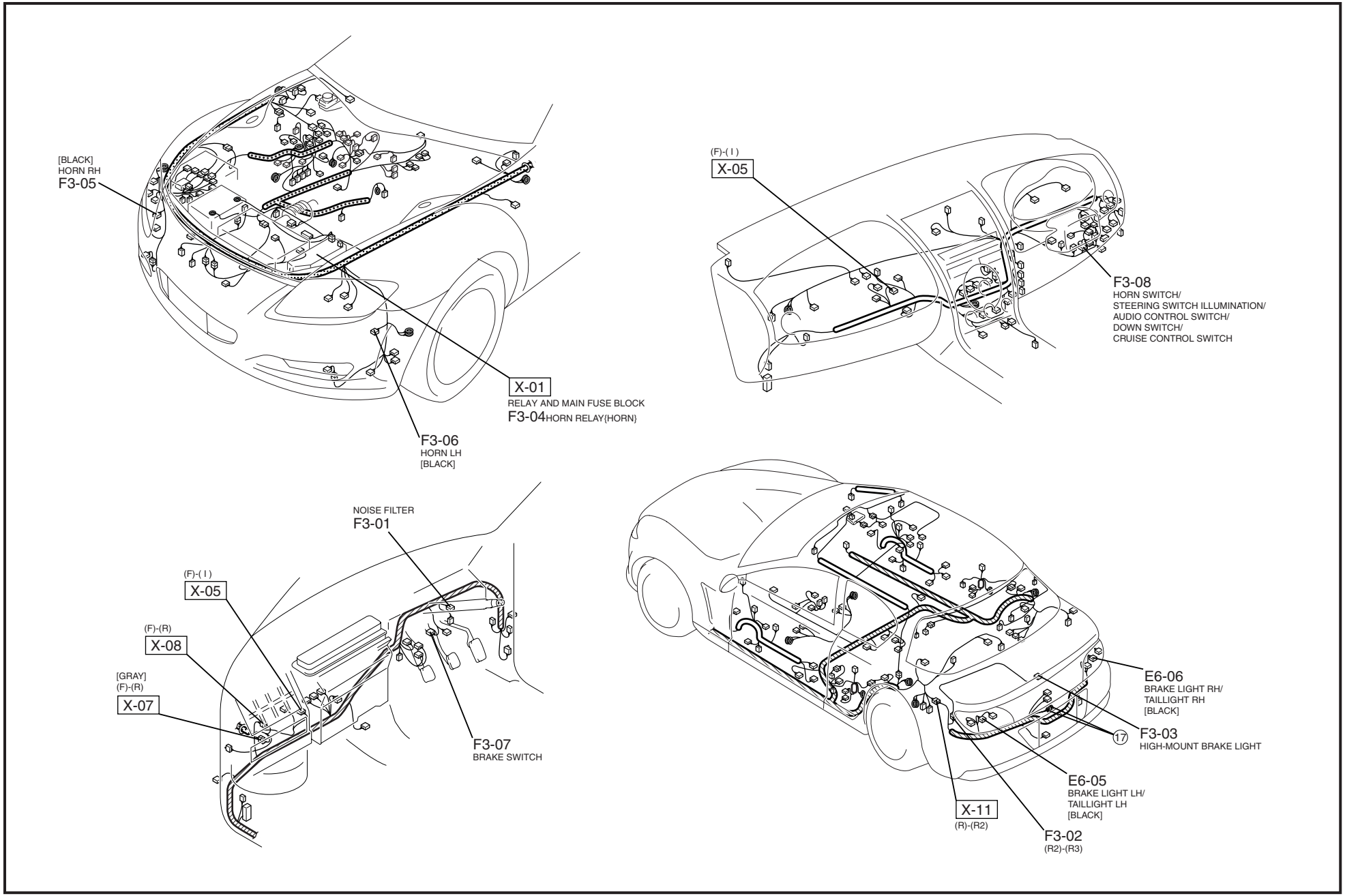

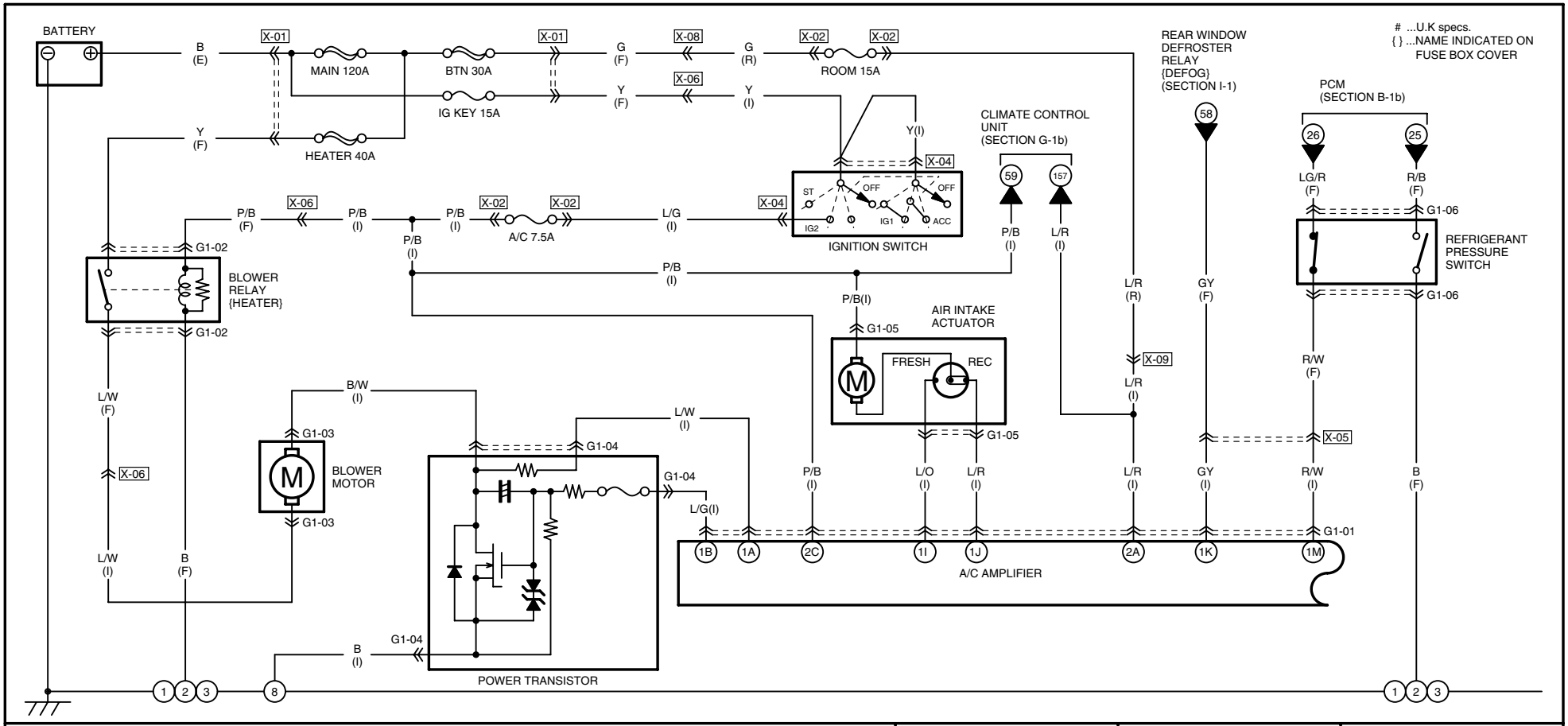

G1-01 A/C AMPLIFIER(I)

	1W	1U	1S	1Q	1O	1M	1K	1I	1G	1E	1C	1A
	G	G/B	✳	✳	✳	R/W	GY	L/O	✳	✳	✳ #B	L/W
	Y	G/Y	✳	LG/B	LG	✳	✳	L/R	✳	✳	✳	L/G
	1X	1V	1T	1R	1P	1N	1L	1J	1H	1F	1D	1B

	2O	2M	2K	2I	2G	2E	2C	2A
	R/L	R/B	✳	R/Y	L	✳	P/B	L/R
	V/Y	L/B	B	W/V	✳	R/W	P	✳
	2P	2N	2L	2J	2H	2F	2D	2B

G1-02 BLOWER RELAY{HEATER}(F)

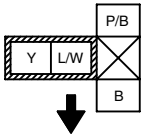

FRONT

NOTE:THIS IS THE CONNECTOR AS SEEN FROM THE TERMINAL SIDE.

G1-03 BLOWER MOTOR(I)

G1-04 POWER TRANSISTOR(I)

G1-06 REFRIGERANT PRESSURE SWITCH(F)

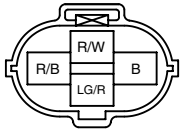

G1-05 AIR INTAKE ACTUATOR(I)

P/B	✳	✳	✳	L/R	✳	L/O

HARNESS SYMBOL: (F) (E) (R)

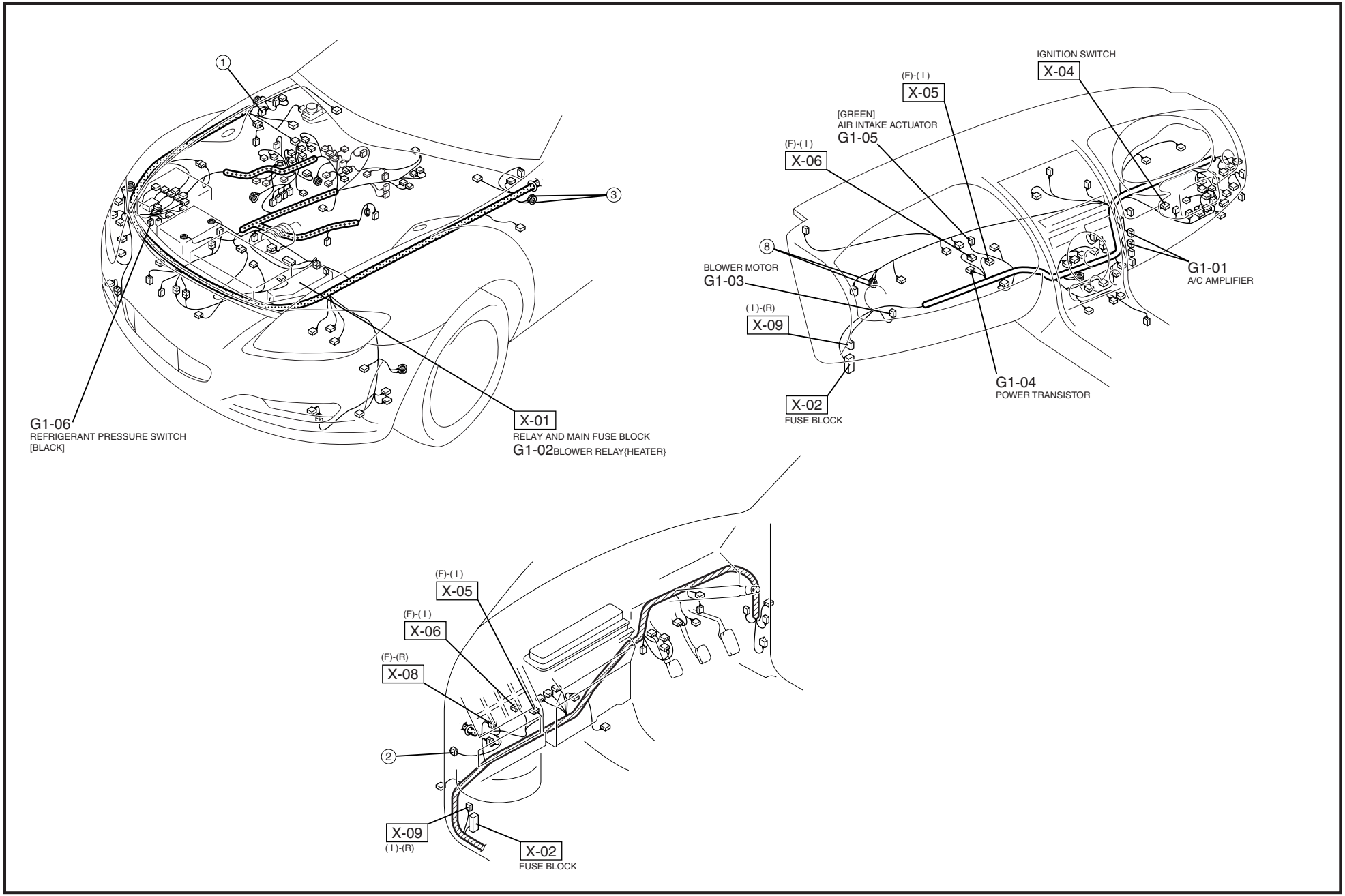

@ ...WITHOUT HANDS-FREE TELEPHONE(HF/TEL)SYSTEM
& ...WITH HANDS-FREE TELEPHONE(HF/TEL)SYSTEM # ...U.K.specs.

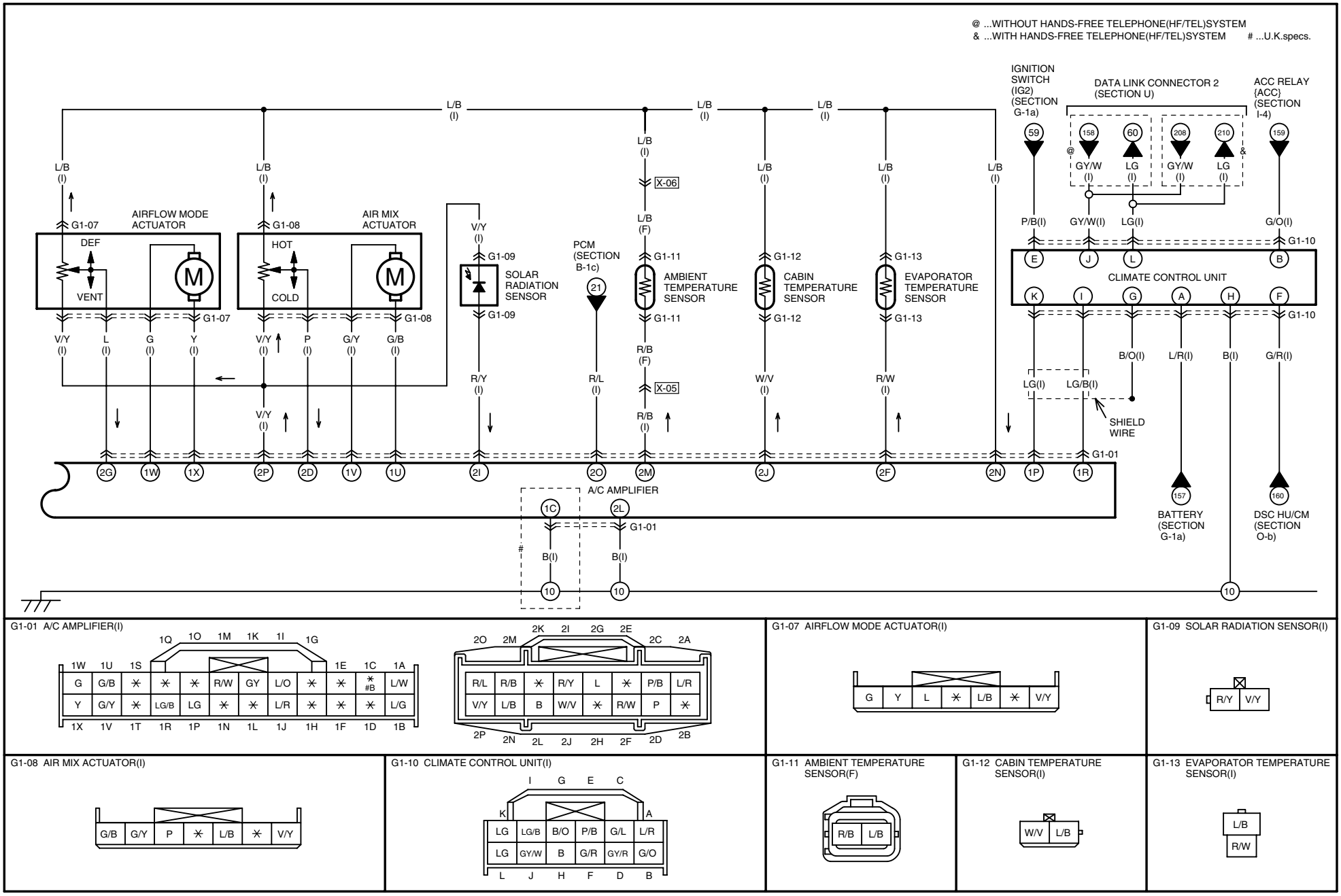

G1-01 A/C AMPLIFIER(I)

G1-07 AIRFLOW MODE ACTUATOR(I)

G1-09 SOLAR RADIATION SENSOR(I)

G1-08 AIR MIX ACTUATOR(I)

G1-10 CLIMATE CONTROL UNIT(I)

G1-11 AMBIENT TEMPERATURE SENSOR(F)

G1-12 CABIN TEMPERATURE SENSOR(I)

G1-13 EVAPORATOR TEMPERATURE SENSOR(I)

HARNESS SYMBOL: (F) (E) (R)

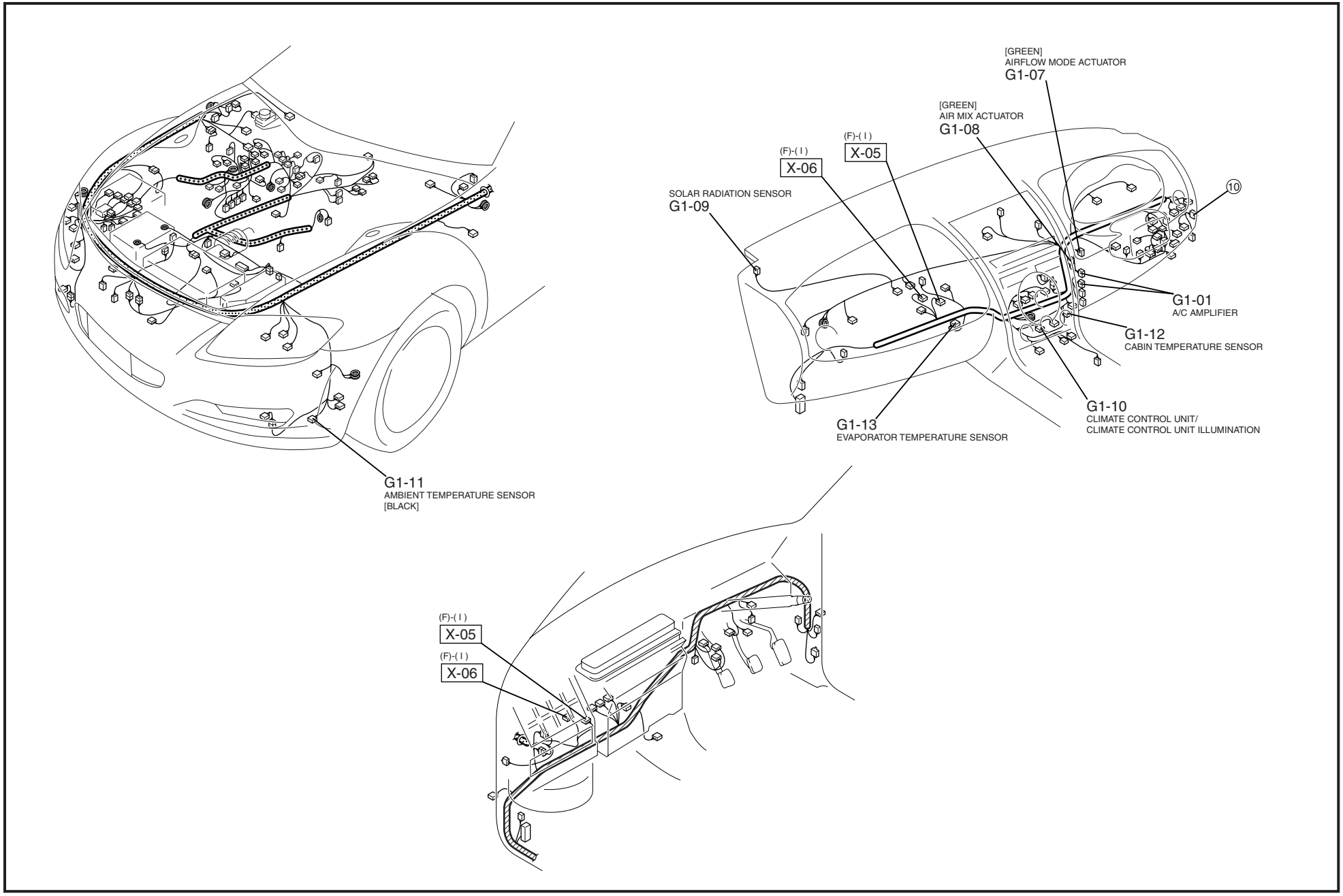

MAGNETIC CLUTCH CONTROL SYSTEM

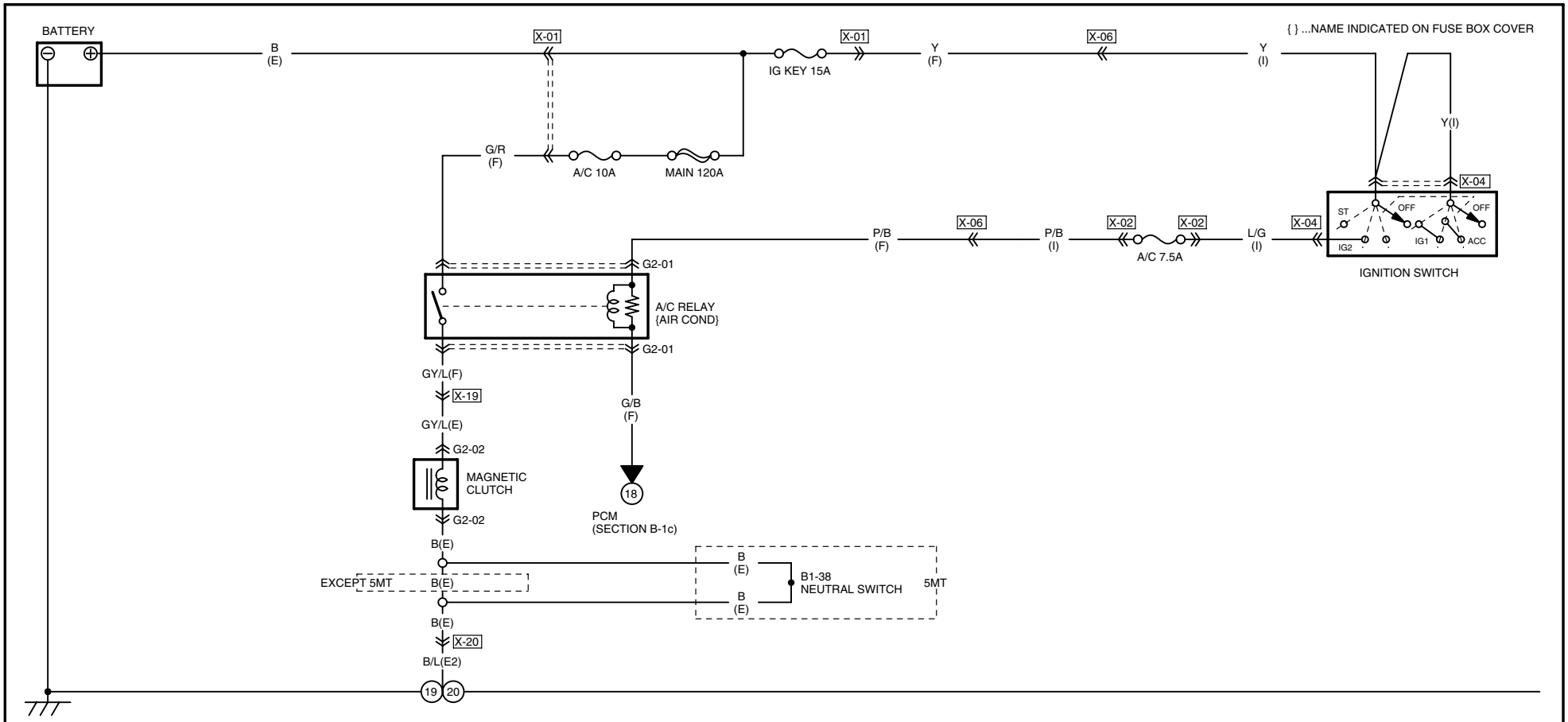

G2-01 A/C RELAY{AIR COND}(F)	G2-02 MAGNETIC CLUTCH(E)	B1-38 NEUTRAL SWITCH(E)				
G/R GY/L P/B G/B FRONT NOTE:THIS IS THE CONNECTOR AS SEEN FROM THE TERMINAL SIDE.	GY/L B	L/R B B				

HARNESS SYMBOL: (F) (E) (R)

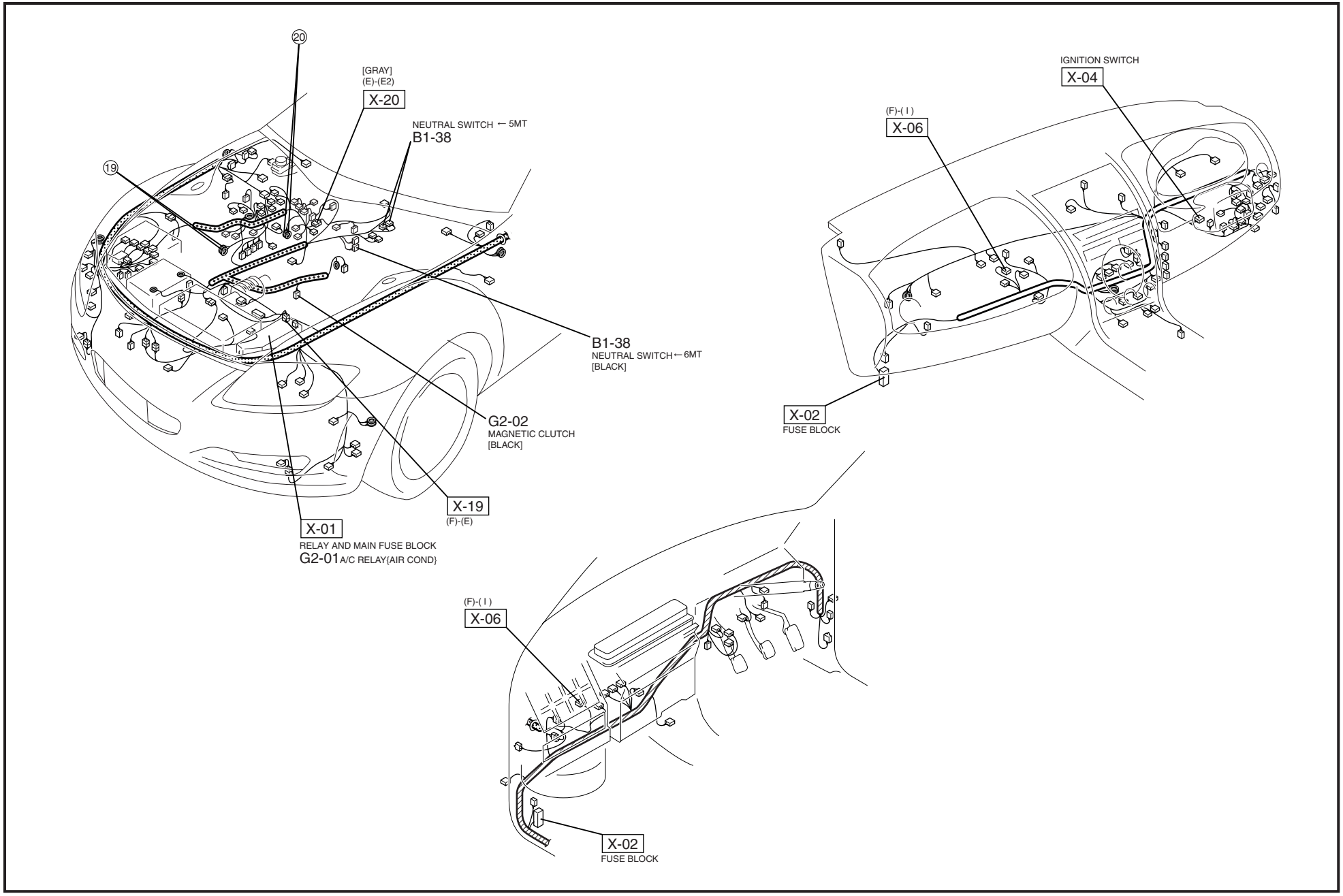

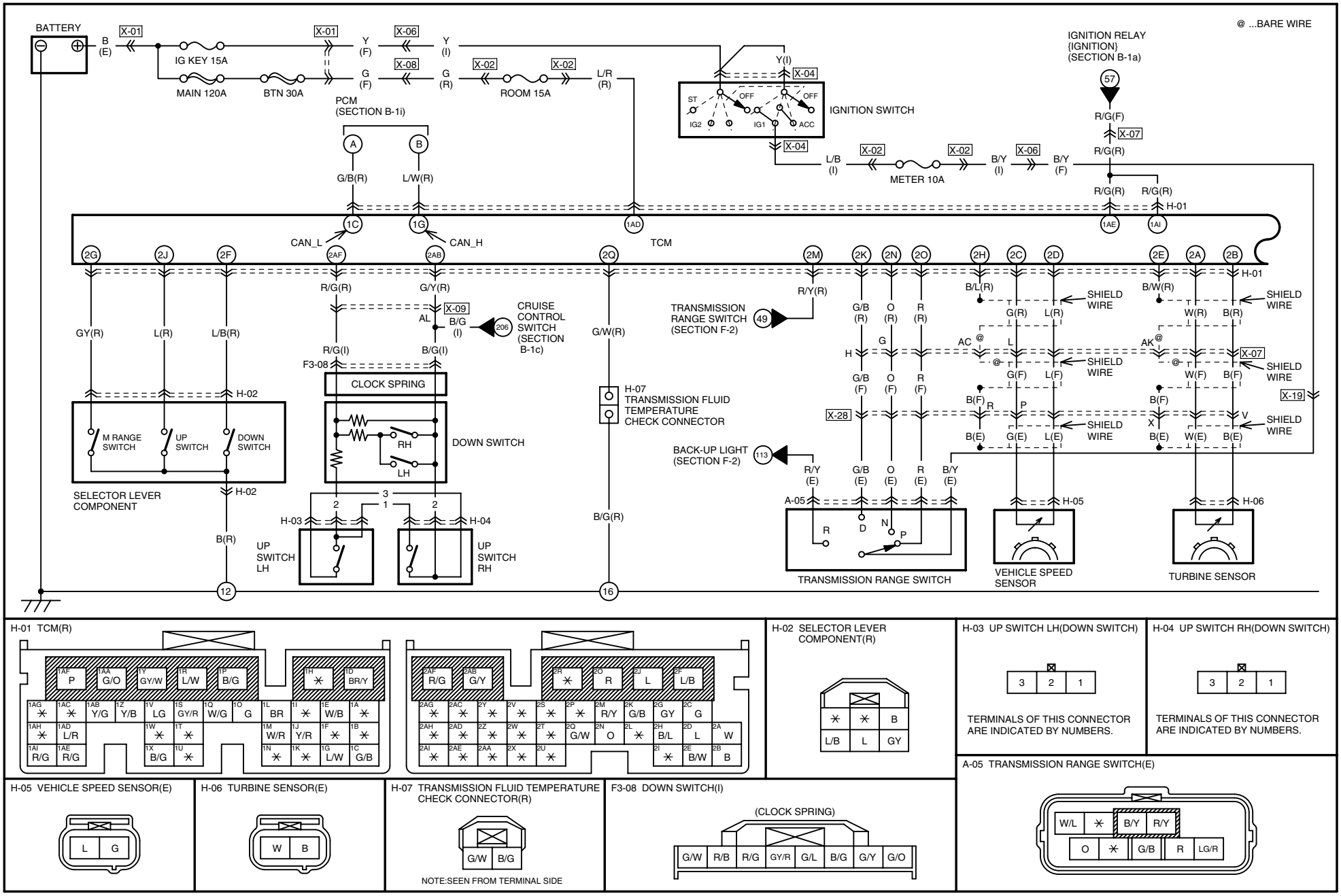

H-01 TCM(R)

H-02 SELECTOR LEVER COMPONENT(R)

H-03 UP SWITCH LH(DOWN SWITCH)

TERMINALS OF THIS CONNECTOR ARE INDICATED BY NUMBERS.

H-04 UP SWITCH RH(DOWN SWITCH)

TERMINALS OF THIS CONNECTOR ARE INDICATED BY NUMBERS.

H-05 VEHICLE SPEED SENSOR(E)

H-06 TURBINE SENSOR(E)

H-07 TRANSMISSION FLUID TEMPERATURE CHECK CONNECTOR(R)

NOTE:SEEN FROM TERMINAL SIDE

F3-08 DOWN SWITCH(I)

(CLOCK SPRING)

A-05 TRANSMISSION RANGE SWITCH(E)

HARNESS SYMBOL: (F) (E) (R)

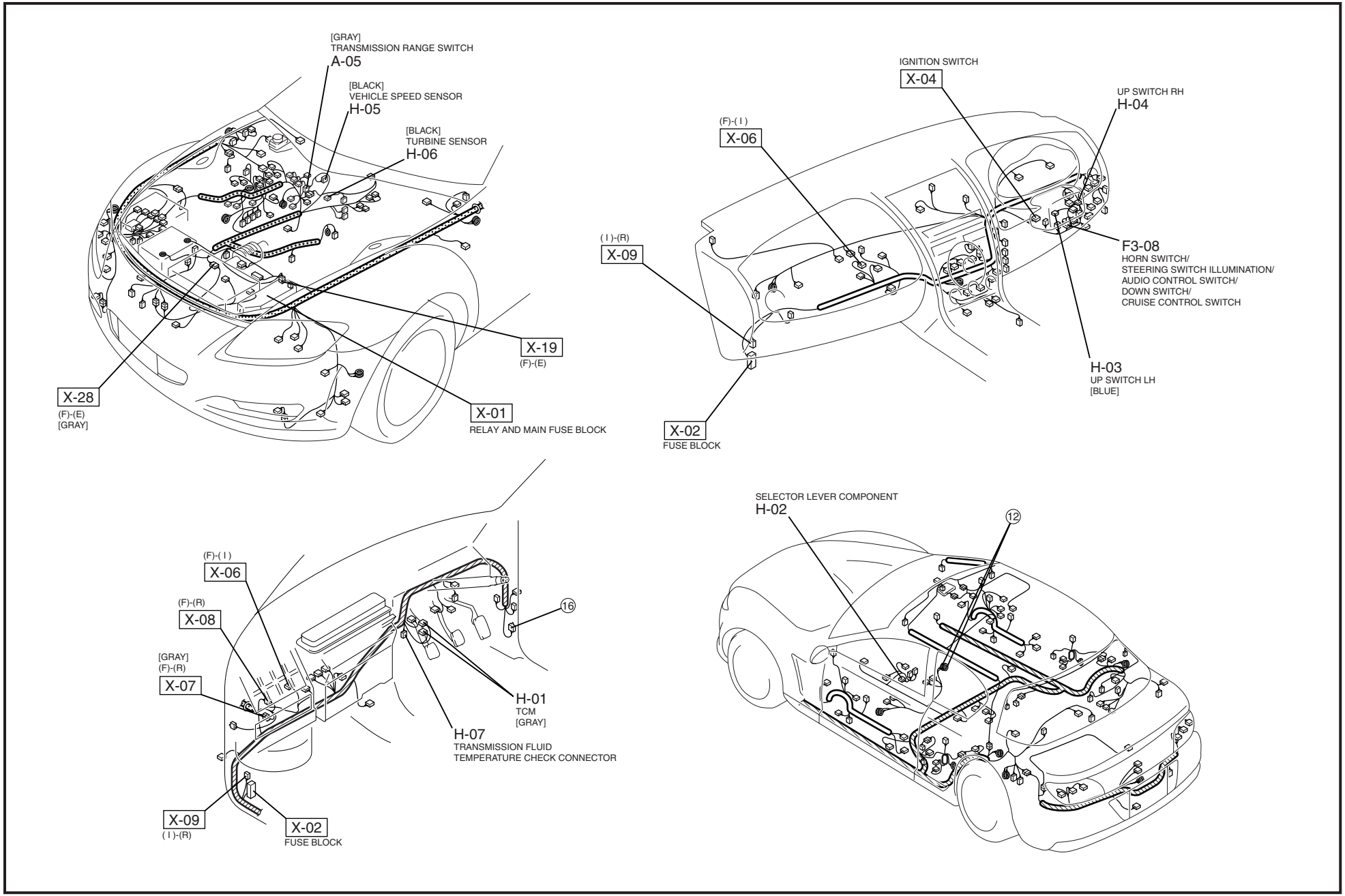

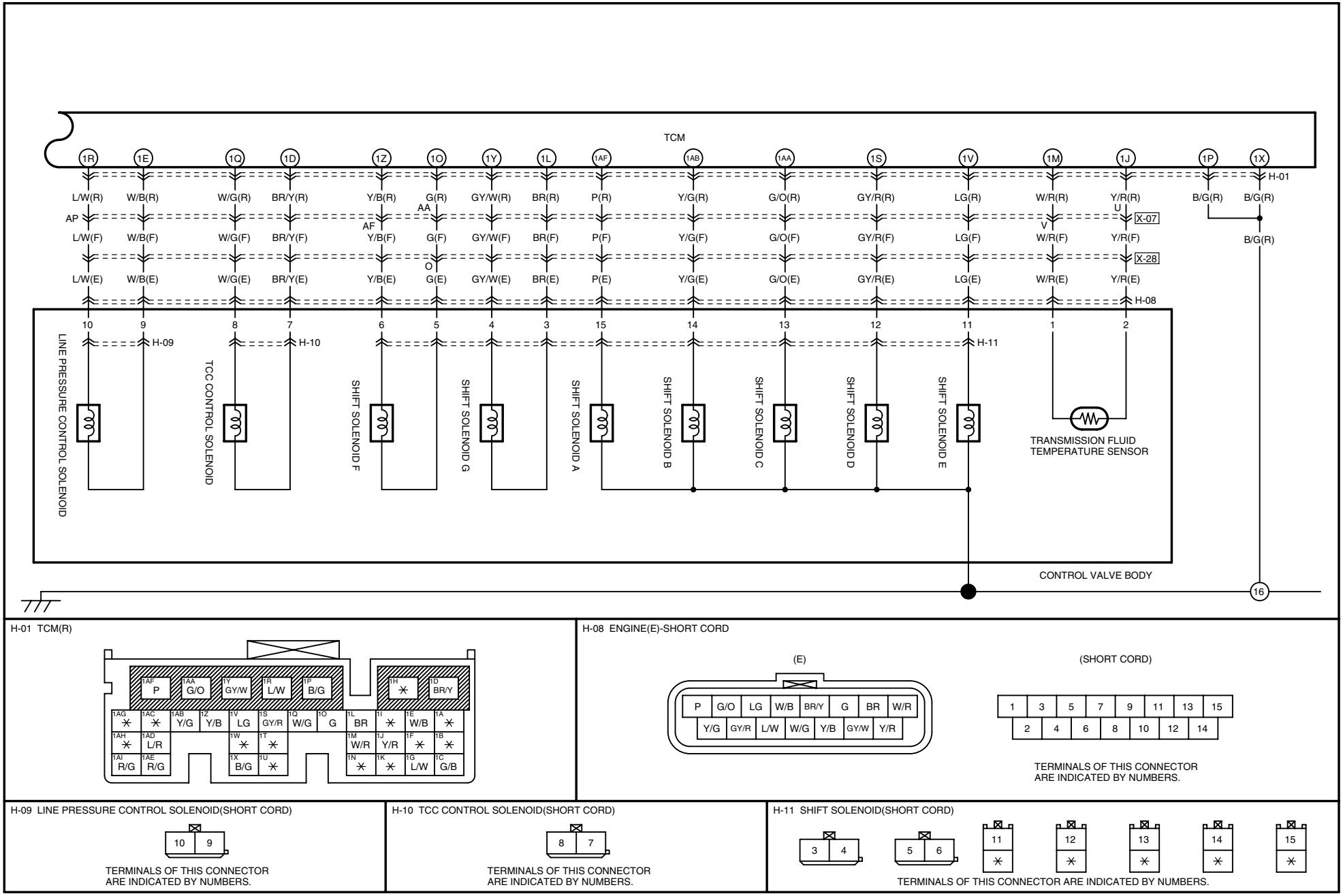

H-01 TCM(R)

H-08 ENGINE(E)-SHORT CORD

TERMINALS OF THIS CONNECTOR ARE INDICATED BY NUMBERS.

H-09 LINE PRESSURE CONTROL SOLENOID(SHORT CORD)

TERMINALS OF THIS CONNECTOR ARE INDICATED BY NUMBERS.

H-10 TCC CONTROL SOLENOID(SHORT CORD)

TERMINALS OF THIS CONNECTOR ARE INDICATED BY NUMBERS.

H-11 SHIFT SOLENOID(SHORT CORD)

TERMINALS OF THIS CONNECTOR ARE INDICATED BY NUMBERS.

HARNESS SYMBOL: (F) (E) (R)

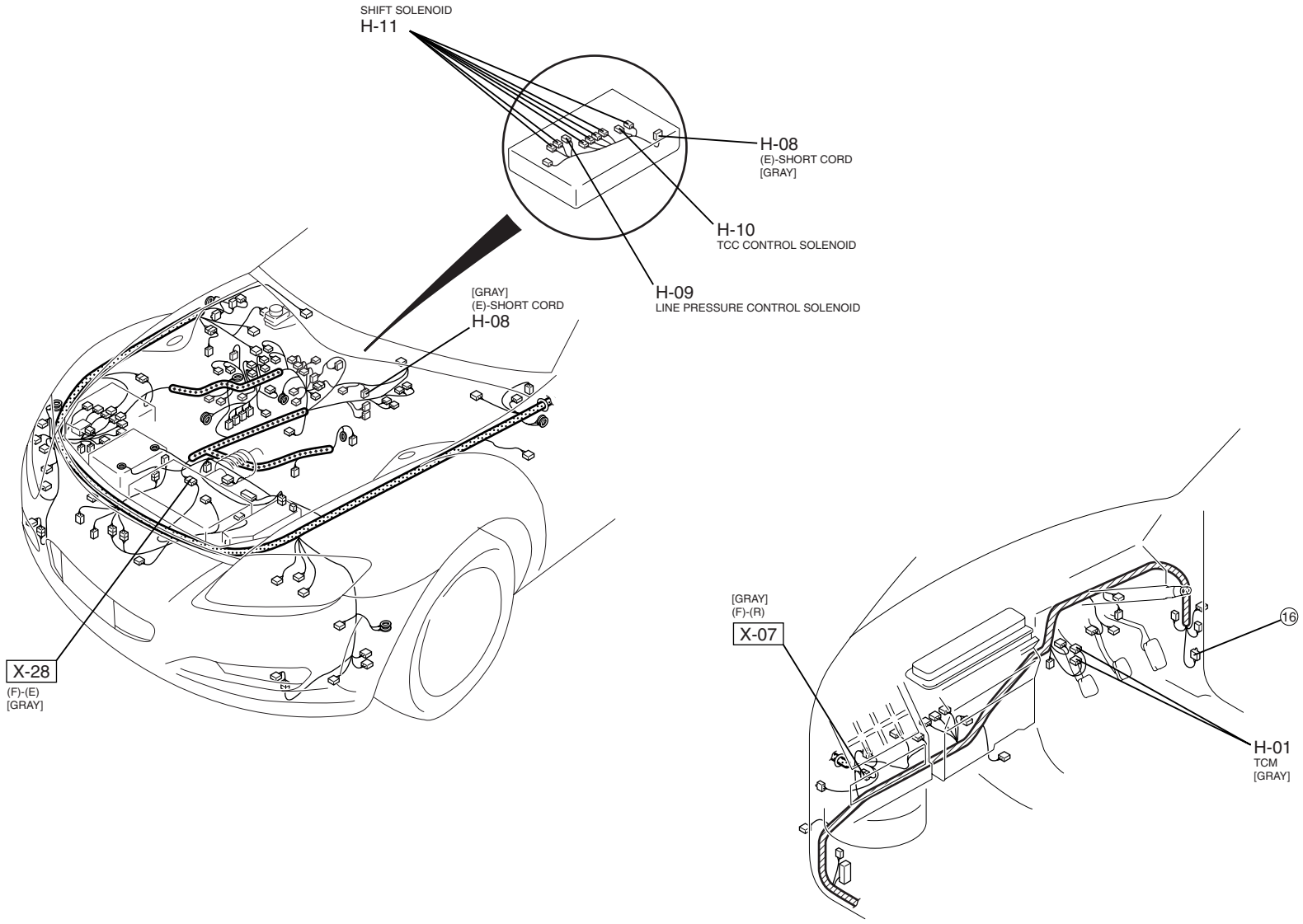

REAR WINDOW DEFROSTER / TRUNK COMPARTMENT LIGHT

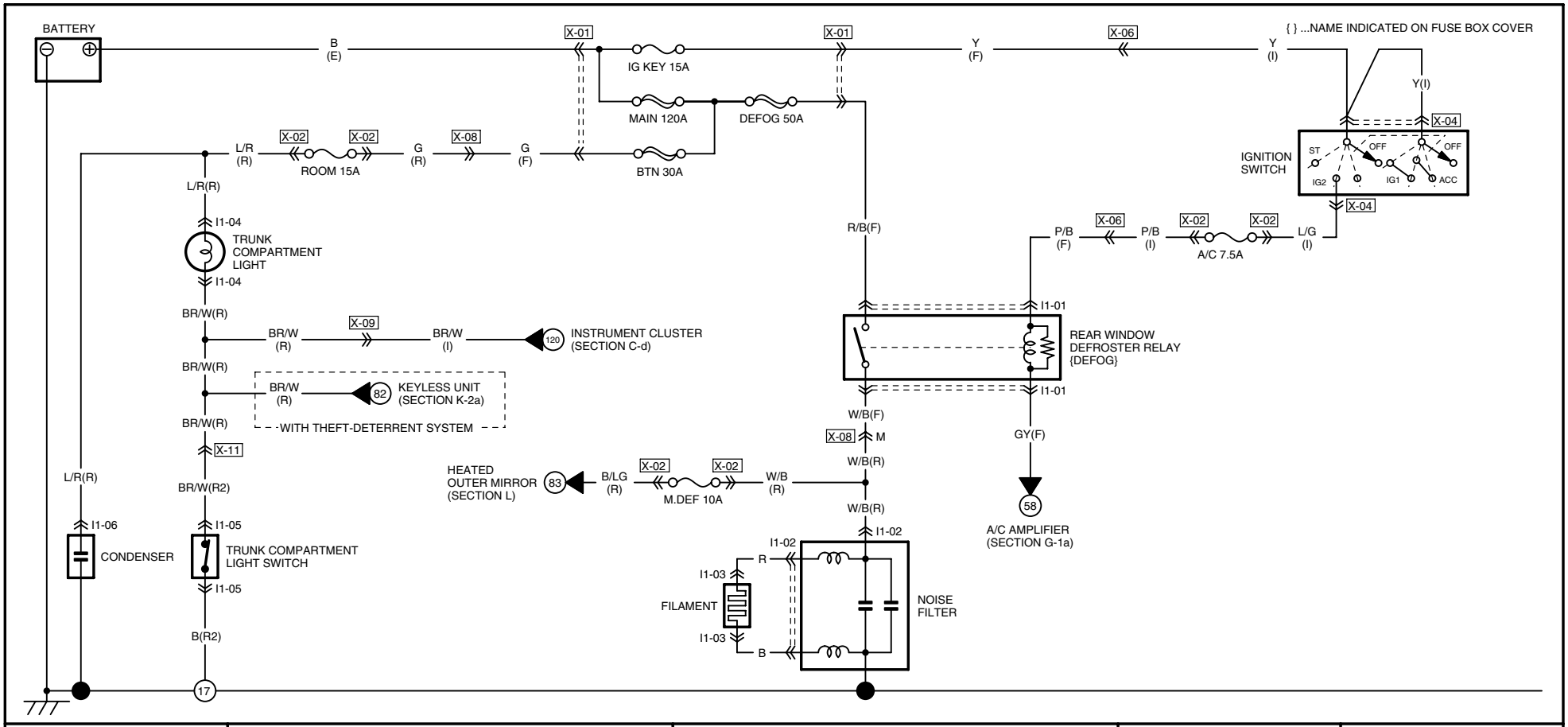

I1-01 REAR WINDOW DEFROSTER RELAY{DEFOG}(F)	I1-02 NOISE FILTER		I1-03 FILAMENT(SHORT CORD)		I1-04 TRUNK COMPARTMENT LIGHT(R)	I1-05 TRUNK COMPARTMENT LIGHT SWITCH (R2)
GY / P/B / W/B / R/B FRONT NOTE:THIS IS TH CONNECTORE AS SEEN FROM THE TERMINAL SIDE.	(R) W/B	(SHORT CORD) R / B	R	B	BR/W / L/R	B / BR/W
	I1-06 CONDENSER(R) L/R					

HARNESS SYMBOL: (F) (E) (R)

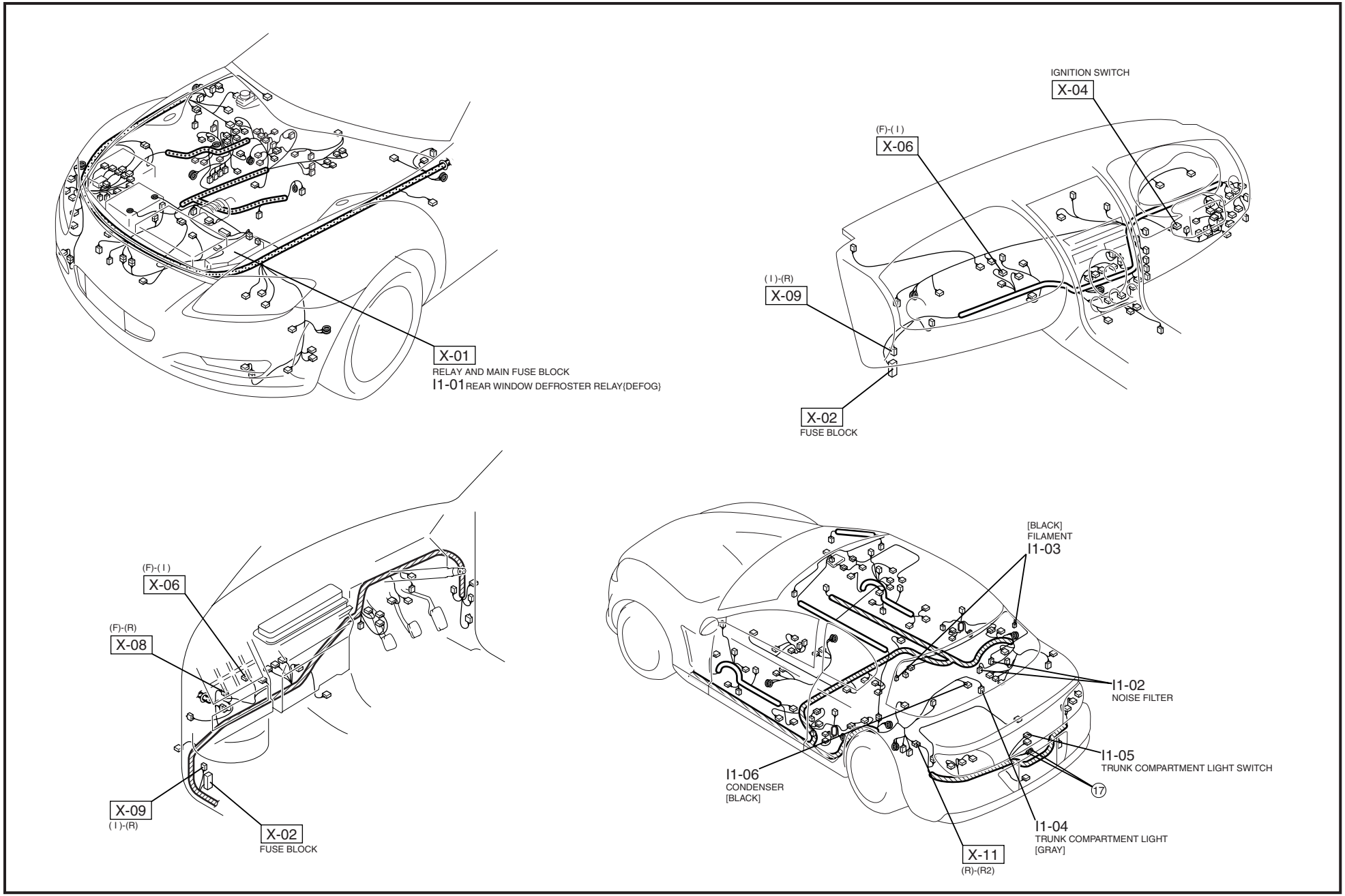

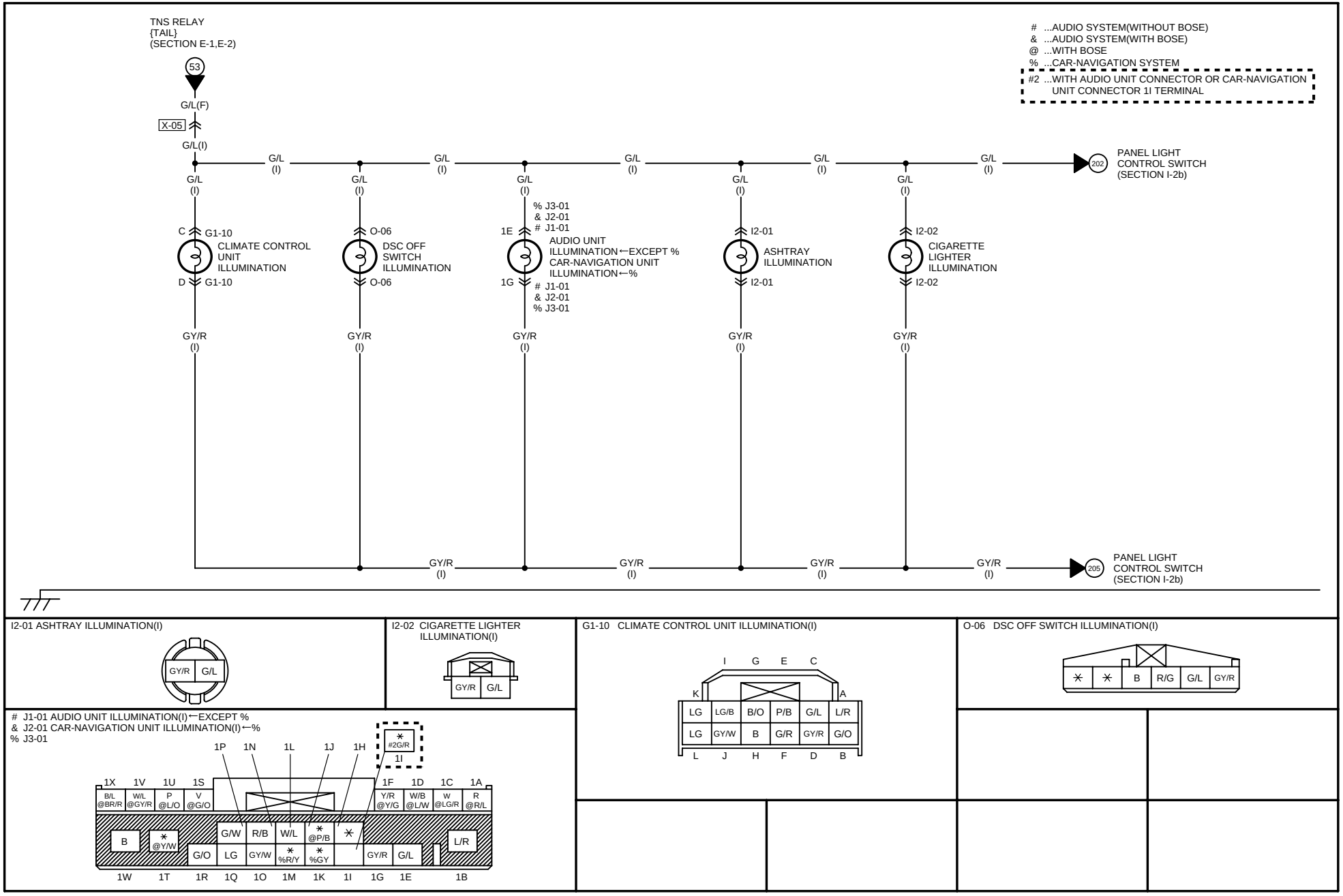
TNS RELAY
{TAIL}
(SECTION E-1,E-2)
53
G/L(F)
X-05
G/L(I)
...AUDIO SYSTEM(WITHOUT BOSE)
& ...AUDIO SYSTEM(WITH BOSE)
@ ...WITH BOSE
% ...CAR-NAVIGATION SYSTEM
#2 ...WITH AUDIO UNIT CONNECTOR OR CAR-NAVIGATION UNIT CONNECTOR 1I TERMINAL
G/L (I)
202
PANEL LIGHT CONTROL SWITCH (SECTION I-2b)
C G1-10
CLIMATE CONTROL UNIT ILLUMINATION
D G1-10
O-06
DSC OFF SWITCH ILLUMINATION
O-06
1E
% J3-01
& J2-01
# J1-01
AUDIO UNIT ILLUMINATION←EXCEPT %
CAR-NAVIGATION UNIT ILLUMINATION←%
1G
J1-01
& J2-01
% J3-01
I2-01
ASHTRAY ILLUMINATION
I2-01
I2-02
CIGARETTE LIGHTER ILLUMINATION
I2-02
GY/R (I)
205
PANEL LIGHT CONTROL SWITCH (SECTION I-2b)
I2-01 ASHTRAY ILLUMINATION(I)
GY/R
G/L
I2-02 CIGARETTE LIGHTER ILLUMINATION(I)
G1-10 CLIMATE CONTROL UNIT ILLUMINATION(I)
I G E C
K A
LG LG/B B/O P/B G/L L/R
LG GY/W B G/R GY/R G/O
L J H F D B
O-06 DSC OFF SWITCH ILLUMINATION(I)
B R/G G/L GY/R
J1-01 AUDIO UNIT ILLUMINATION(I)←EXCEPT %
& J2-01 CAR-NAVIGATION UNIT ILLUMINATION(I)←%
% J3-01
#2G/R
1I
1P 1N 1L 1J 1H
1X 1V 1U 1S
B/L @BR/R
W/L @GY/R
P @L/O
V @G/O
1F 1D 1C 1A
Y/R @Y/G
W/B @L/W
W @LG/R
R @R/L
B
@Y/W
G/O
LG
G/W
GY/W
R/B
%R/Y
W/L
@P/B
%GY
GY/R
G/L
L/R
1W 1T 1R 1Q 1O 1M 1K 1I 1G 1E 1B

HARNESS SYMBOL: (F) (E) (R)

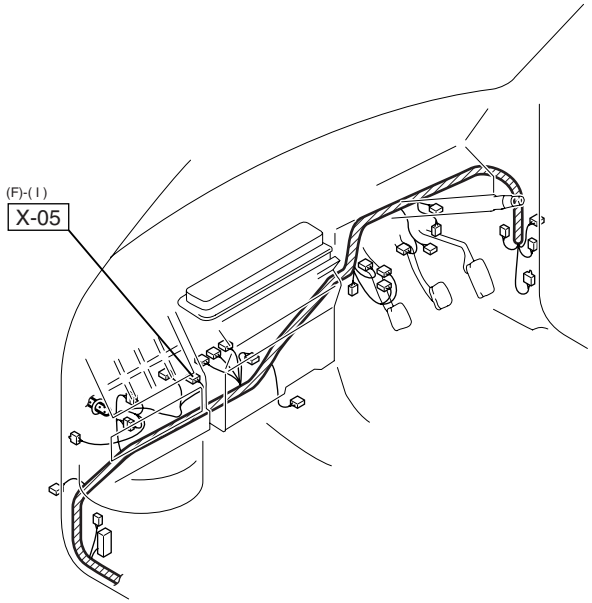

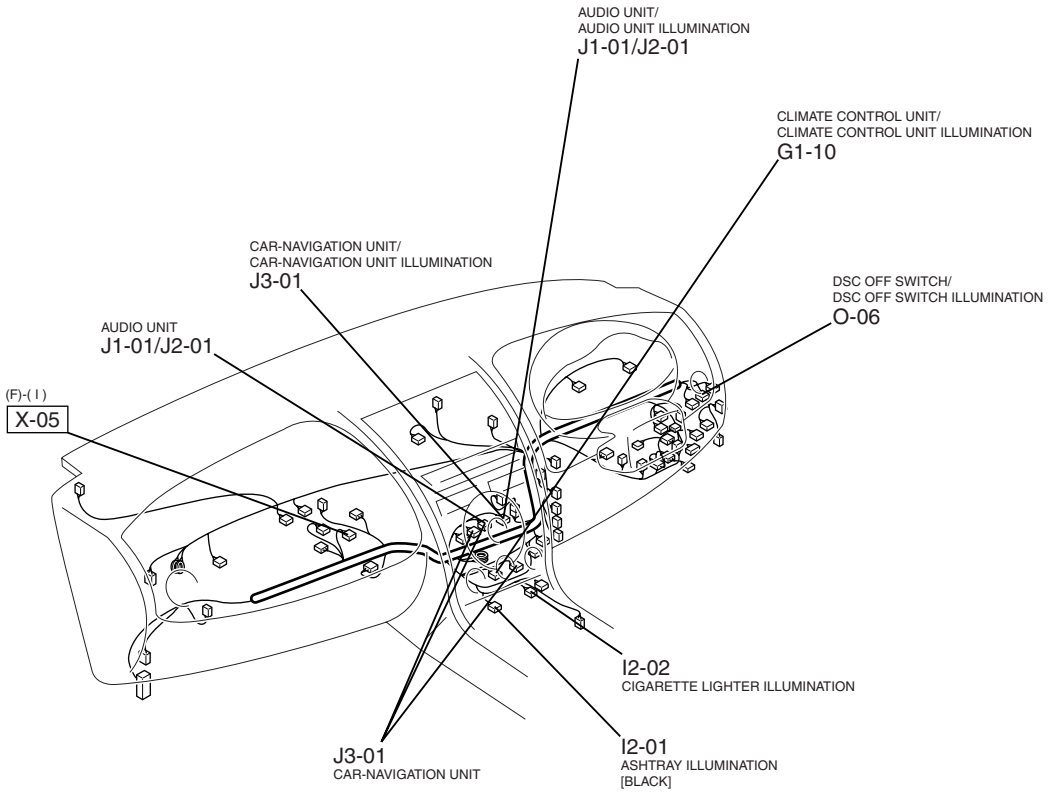

< > ...WITH PASSENGER-SIDE AIR BAG CUT-OFF SYSTEM
% ...CAR-NAVIGATION SYSTEM

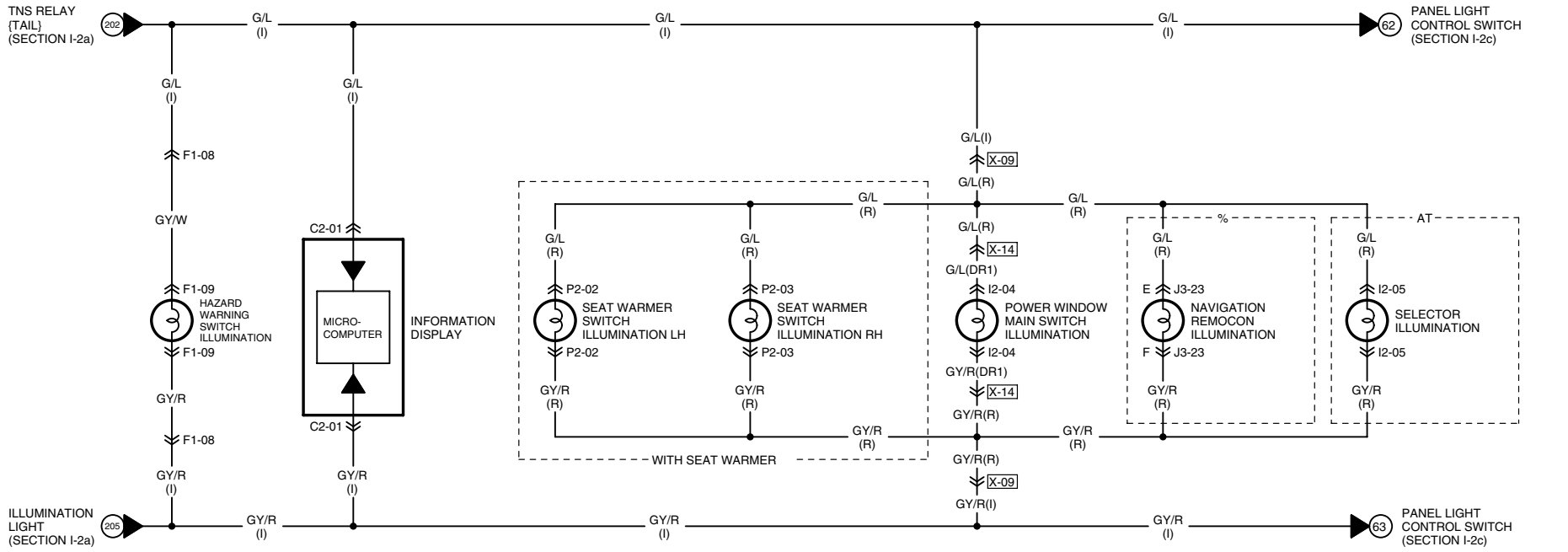

I2-04 POWER WINDOW MAIN SWITCH ILLUMINATION(DR1)

I2-05 SELECTOR ILLUMINATION(R)

C2-01 INFORMATION DISPLAY(I)

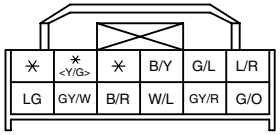

F1-08 INSTRUMENT PANEL(I)-SHORT CORD

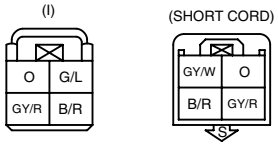

F1-09 HAZARD WARNING SWITCH ILLUMINATION(SHORT CORD)

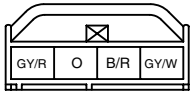

J3-23 NAVIGATION REMOCON ILLUMINATION(R)

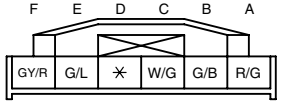

P2-02 SEAT WARMER SWITCH ILLUMINATION LH(R)

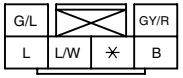

P2-03 SEAT WARMER SWITCH ILLUMINATION RH(R)

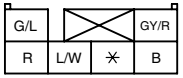

HARNESS SYMBOL: (F) (E) (R)

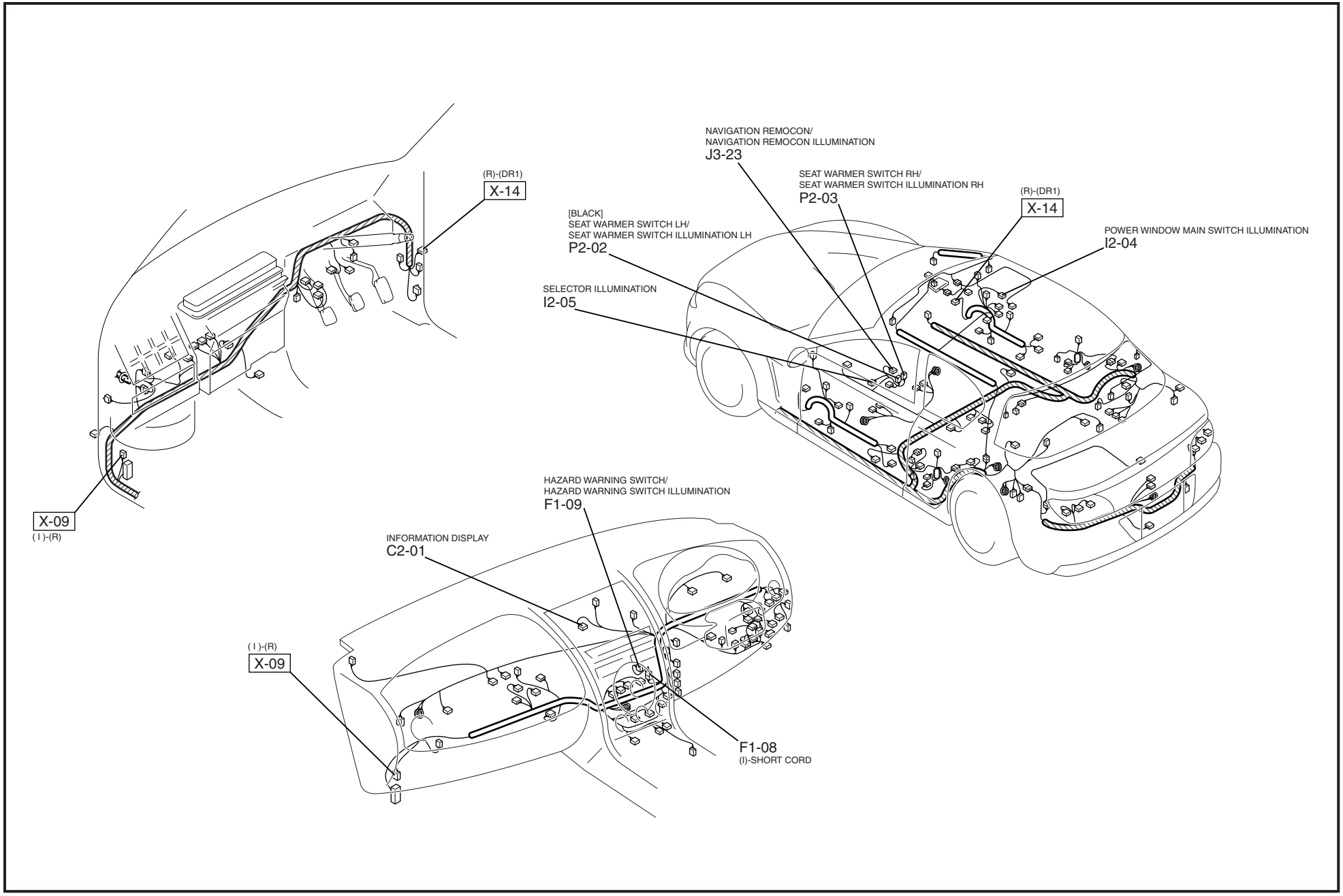

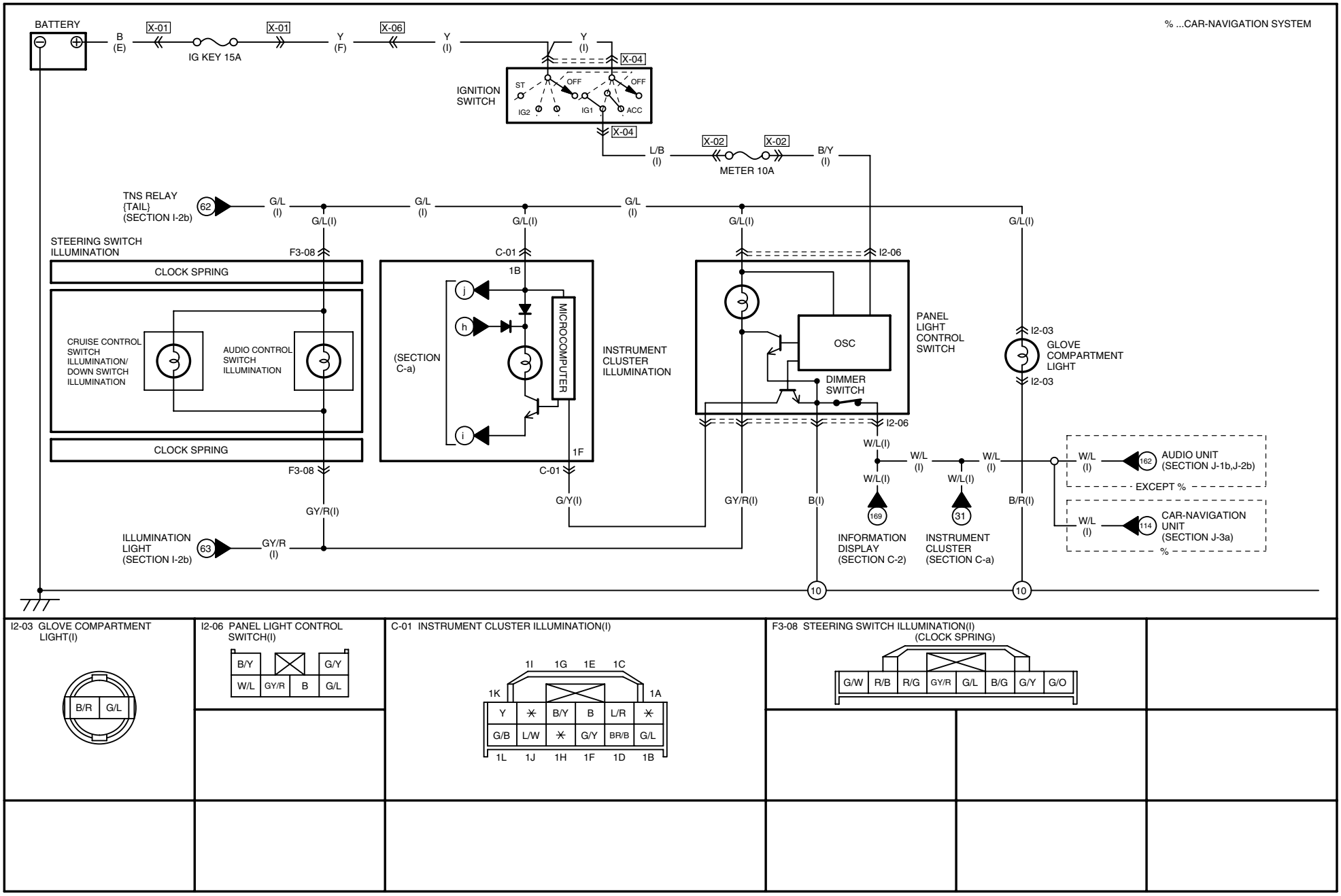

I2-03 GLOVE COMPARTMENT LIGHT(I)

I2-06 PANEL LIGHT CONTROL SWITCH(I)

C-01 INSTRUMENT CLUSTER ILLUMINATION(I)

F3-08 STEERING SWITCH ILLUMINATION(I) (CLOCK SPRING)

HARNESS SYMBOL: (F) (E) (R)

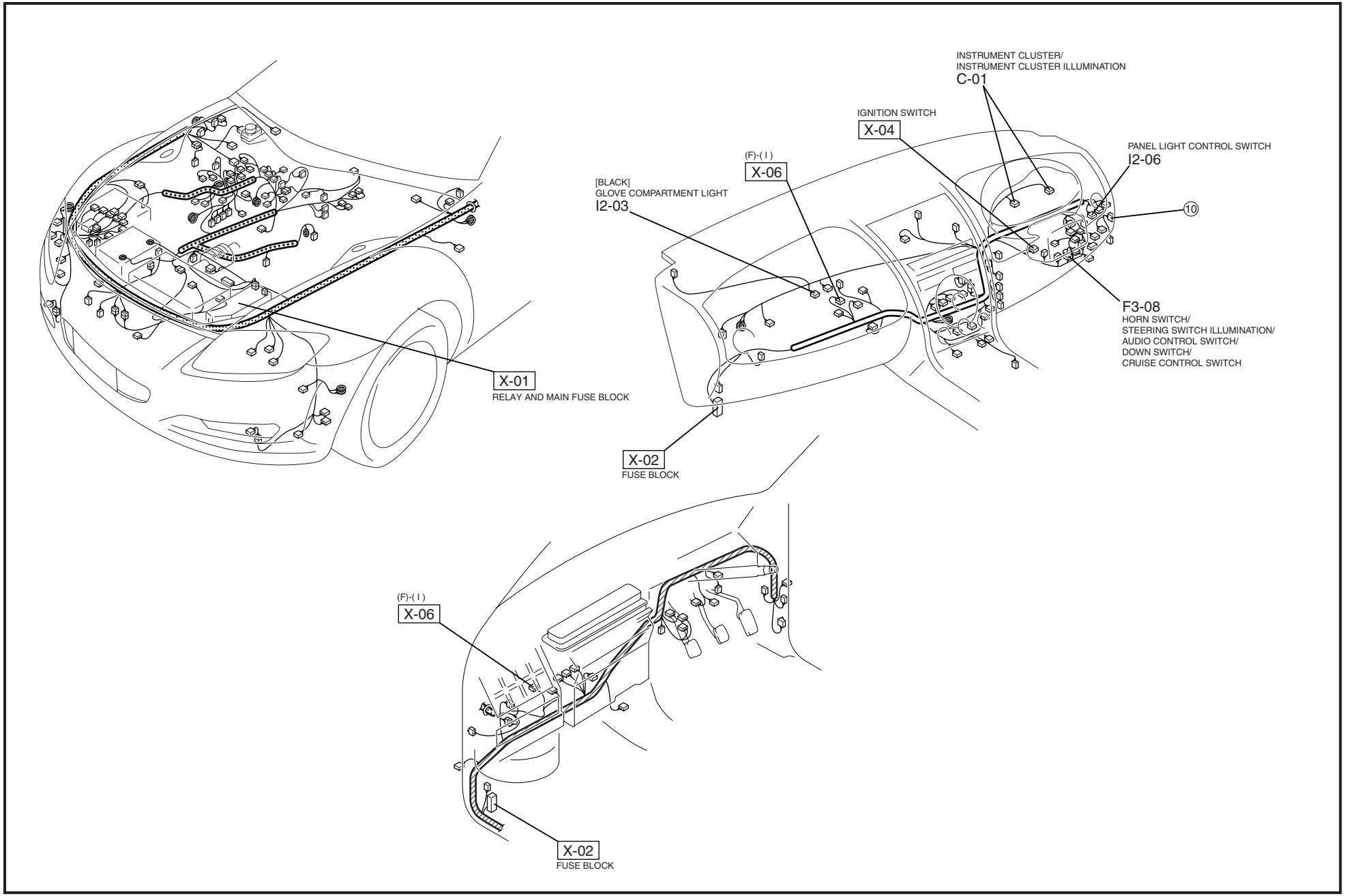

COURTESY LIGHT / GROUND ILLUMINATION LIGHT / INTERIOR LIGHT / MAP LIGHT / VANITY MIRROR ILLUMINATION

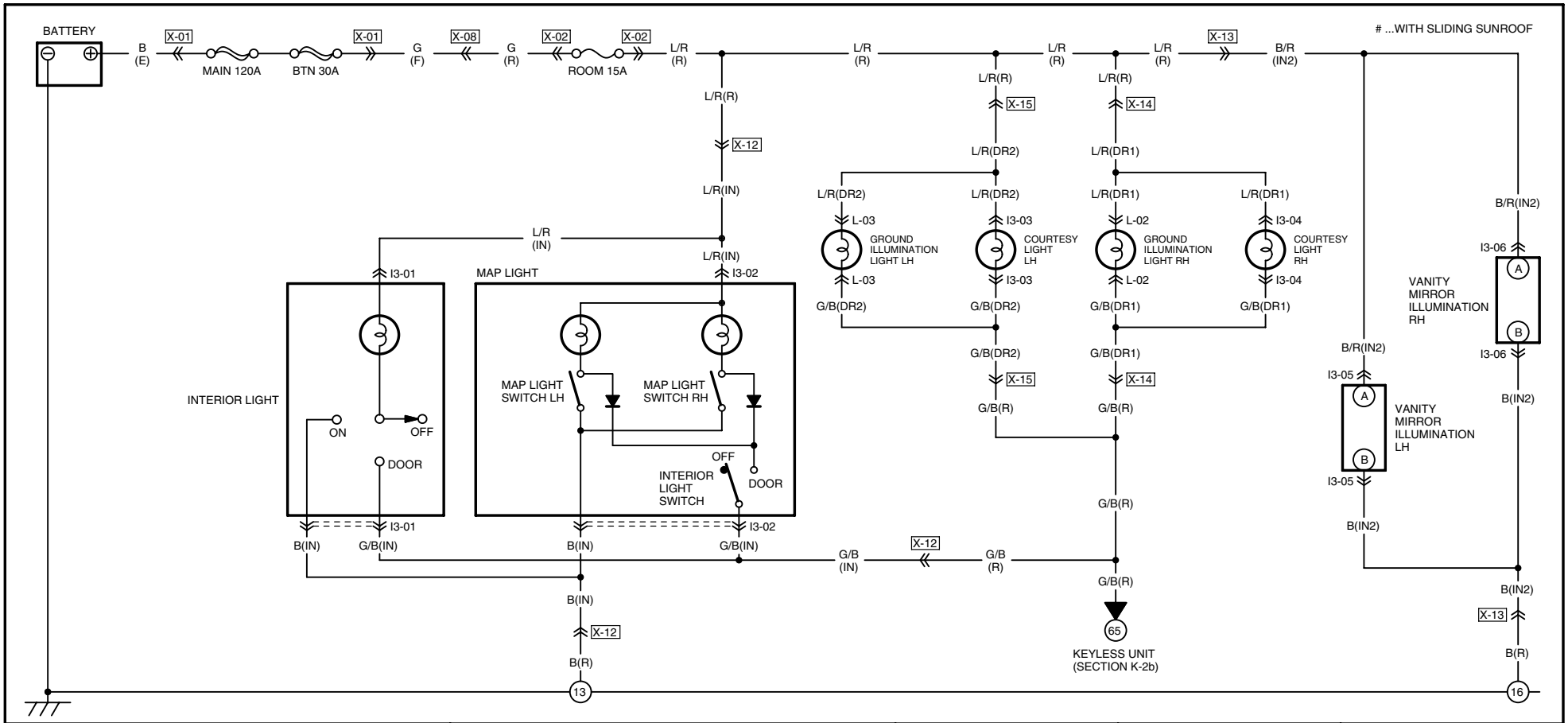

I3-01 INTERIOR LIGHT(IN)	I3-02 MAP LIGHT(IN)	I3-03 COURTESY LIGHT LH(DR2)	I3-04 COURTESY LIGHT RH(DR1)	I3-05 VANITY MIRROR ILLUMINATION LH(IN2)
L/R, G/B, B, ✳	B, L/R, G/B, ✳ #P/B	G/B, L/R	G/B, L/R	B, B/R (B, A)
L-02 GROUND ILLUMINATION LIGHT RH(DR1)	**L-03 GROUND ILLUMINATION LIGHT LH(DR2)**			**I3-06 VANITY MIRROR ILLUMINATION RH(IN2)**
B/LG, L/R, G/B, B; L/Y, BR, BR/B, ✳	B/LG, L/R, G/B, B; LG, BR, BR/Y, ✳			B, B/R (B, A)

HARNESS SYMBOL: (F) (E) (R)

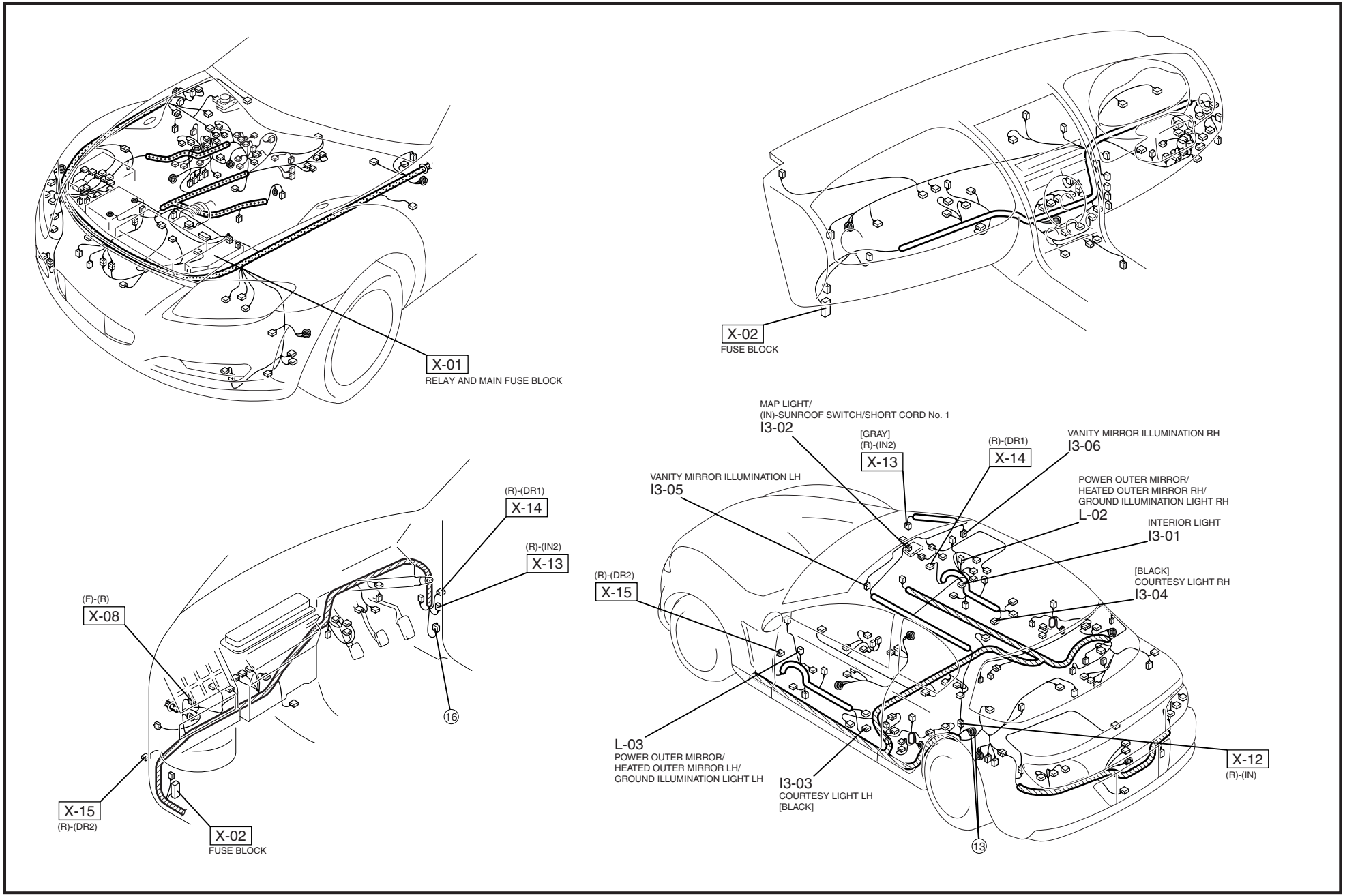

ACC RELAY / CIGARETTE LIGHTER

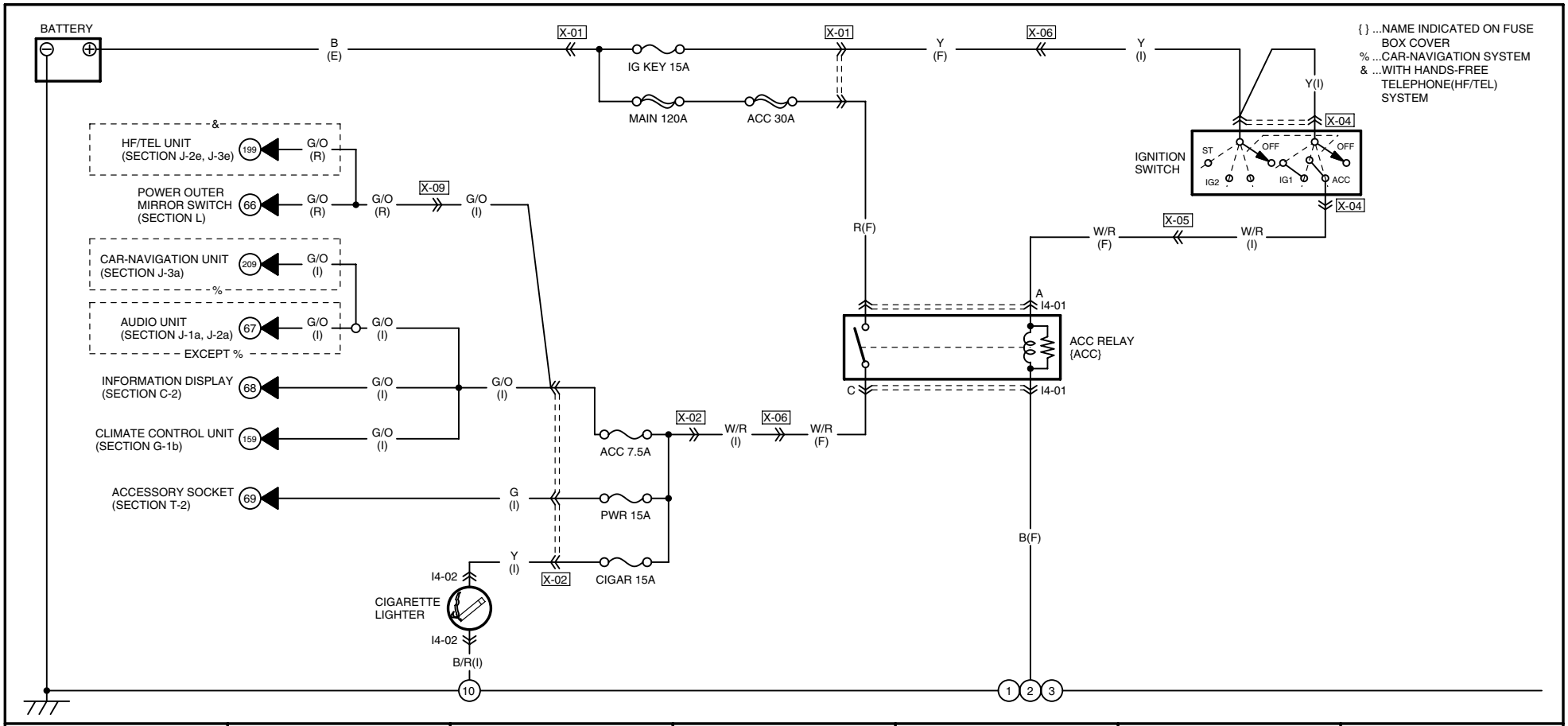

I4-01 ACC RELAY{ACC}(F)	I4-02 CIGARETTE LIGHTER(I)					
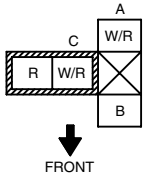 NOTE:THIS IS THE CONNECTOR AS SEEN FROM THE TERMINAL SIDE.						

HARNESS SYMBOL: (F) (E) (R)

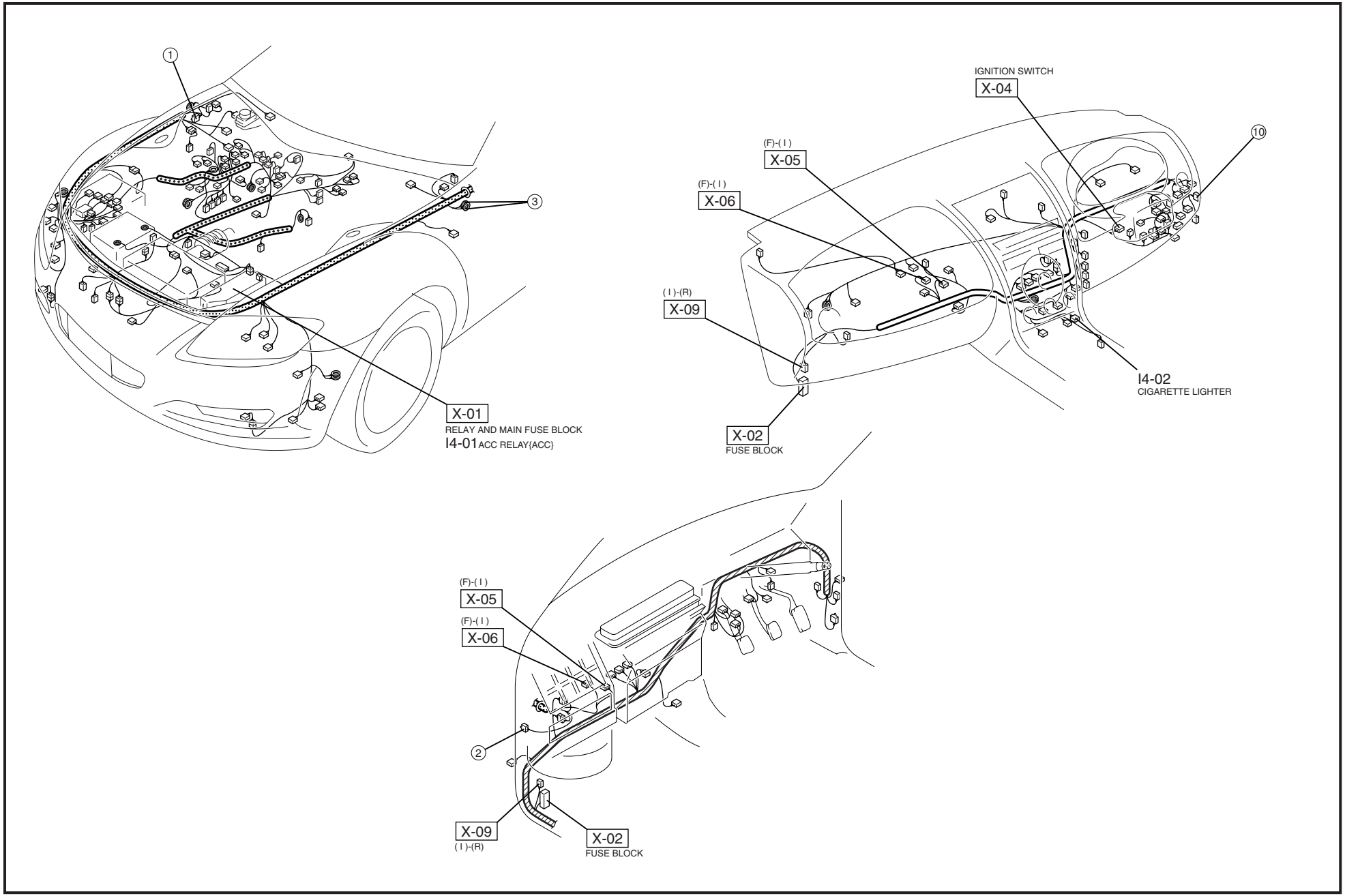

AUDIO SYSTEM(WITHOUT BOSE)

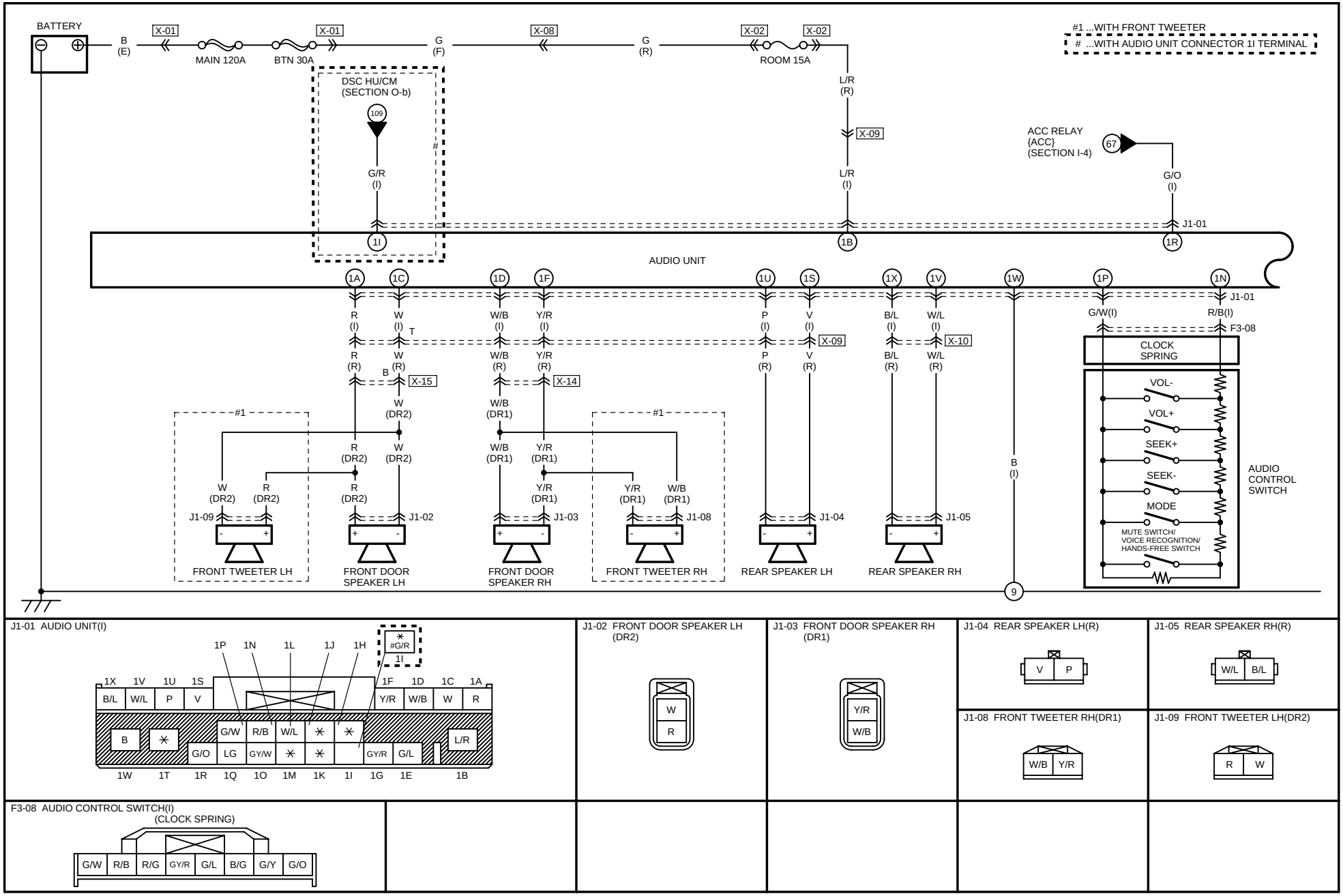

J1-01 AUDIO UNIT(I)

J1-02 FRONT DOOR SPEAKER LH (DR2)

J1-03 FRONT DOOR SPEAKER RH (DR1)

J1-04 REAR SPEAKER LH(R)

J1-05 REAR SPEAKER RH(R)

J1-08 FRONT TWEETER RH(DR1)

J1-09 FRONT TWEETER LH(DR2)

F3-08 AUDIO CONTROL SWITCH(I) (CLOCK SPRING)

HARNESS SYMBOL: (F) (E) (R)

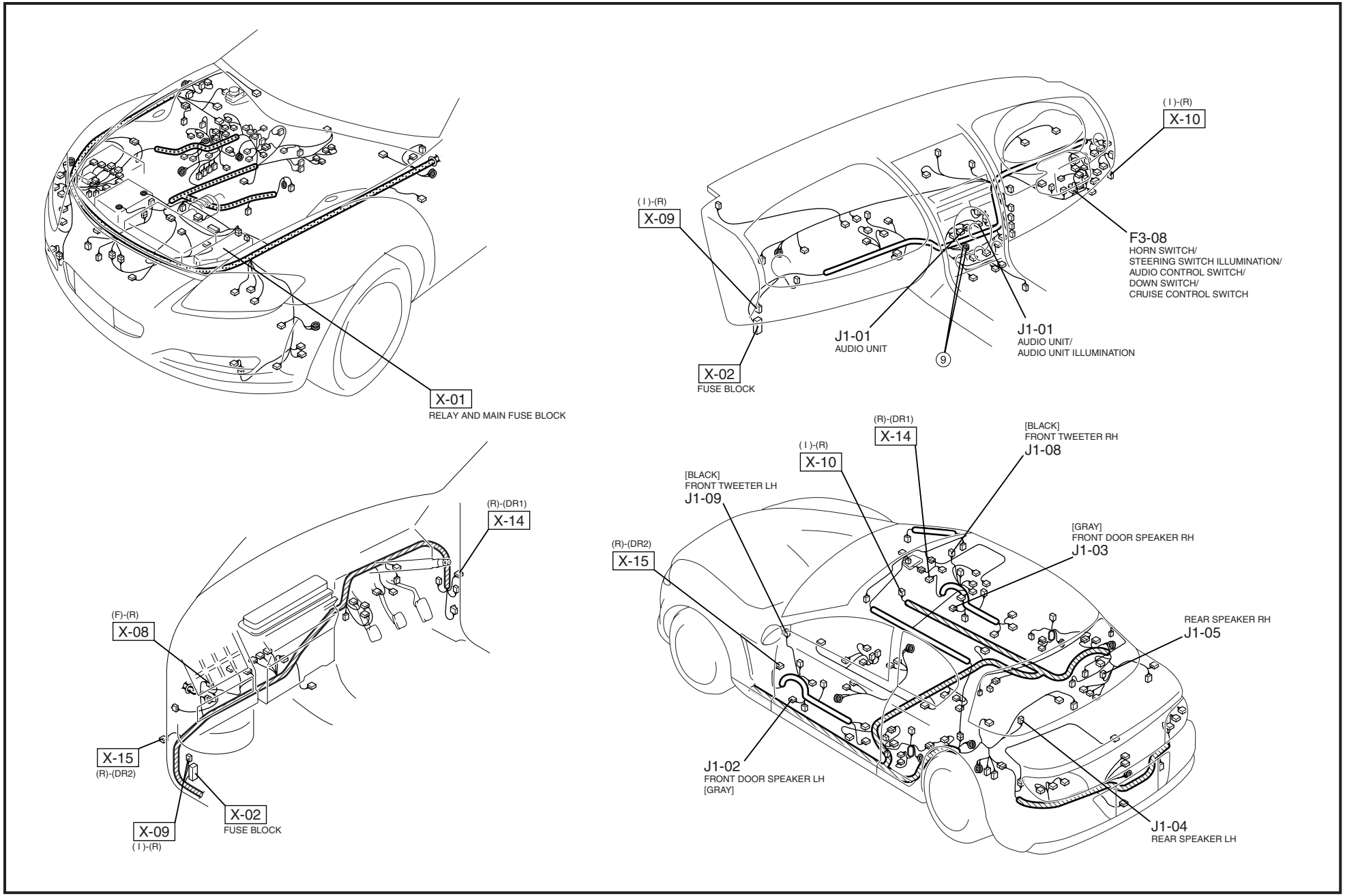

There are two types of circuit (types A and B). & ...TYPE A
@ ...TYPE B
# ...BARE WIRE

TYPE A

2M 2E 2C 2D 2F 2A

LG/W(I) LG/W(I) B(I)

Y/R(I) LG/B(I) LG/R(I) LG/W(I) # G(I)

SHIELD WIRE

I N X-10

Y/R(R) LG/B(R) LG/R(R) LG/W(R) # G(R)

SHIELD WIRE

J1-06

F C E D B

AUXILIARY JACK

AUDIO UNIT

1L

W/L(I)

162

PANEL LIGHT CONTROL SWITCH (SECTION I-2c)

TYPE B

2C 2E 2G 2M 2A

B(I)

LG(I) LG/B(I) Y/B(I) Y/R(I)

SHIELD WIRE

B(I)

N X-10

LG(R) LG/B(R) Y/B(R) Y/R(R) B(R)

SHIELD WIRE

J1-06

E C D F

AUXILIARY JACK

1O 1Q

J1-01

GY/W(I) LG(I)

165 166

DATA LINK CONNECTOR 2 (SECTION U)

J1-01 AUDIO UNIT(I)

1P 1N 1L 1J 1H

1X 1V 1U 1S 1F 1D 1C 1A

B/L W/L P V Y/R W/B W R

B ✳ G/W R/B W/L ✳ ✳ L/R

G/O LG GY/W ✳ ✳ ✳ GY/R G/L

1W 1T 1R 1Q 1O 1M 1K 1I 1G 1E 1B

2G 2C

@Y/B & ✳ @LG &LG/R

2O 2M 2K 2I 2G 2E 2C 2A

✳ Y/R ✳ ✳ LG/B B

✳ ✳ ✳ ✳ ✳ ✳

2P 2N 2L 2J 2H 2F 2D 2B

@✳ &LG/W @✳ &LG/W

2F 2D

There are two types of circuit (types A and B).

J1-06 AUXILIARY JACK(R)

E D B

@LG &LG/R @Y/B &LG/W @✳ &G

Y/R LG/B ✳

F E D C B A

There are two types of circuit (types A and B).

HARNESS SYMBOL: (F) (E) (R)

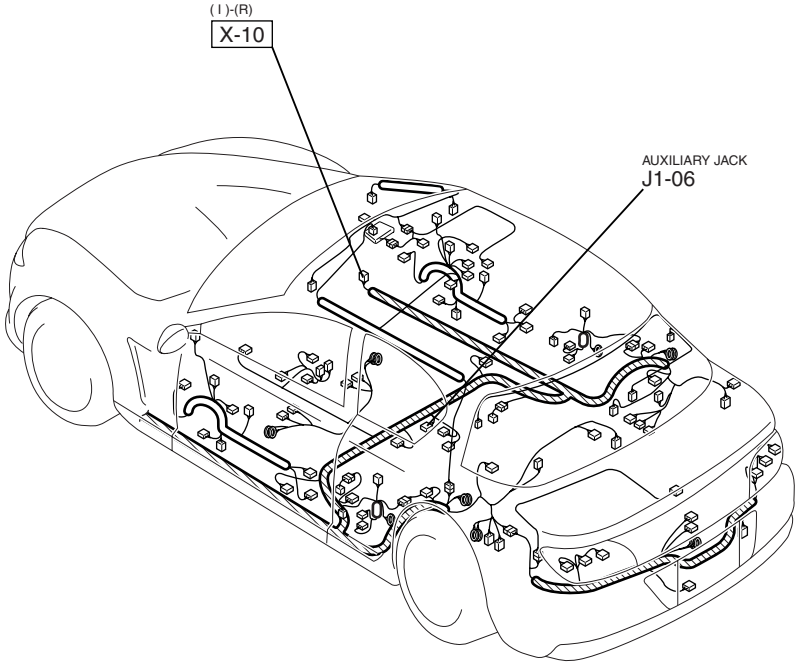

AUDIO SYSTEM(WITH BOSE)

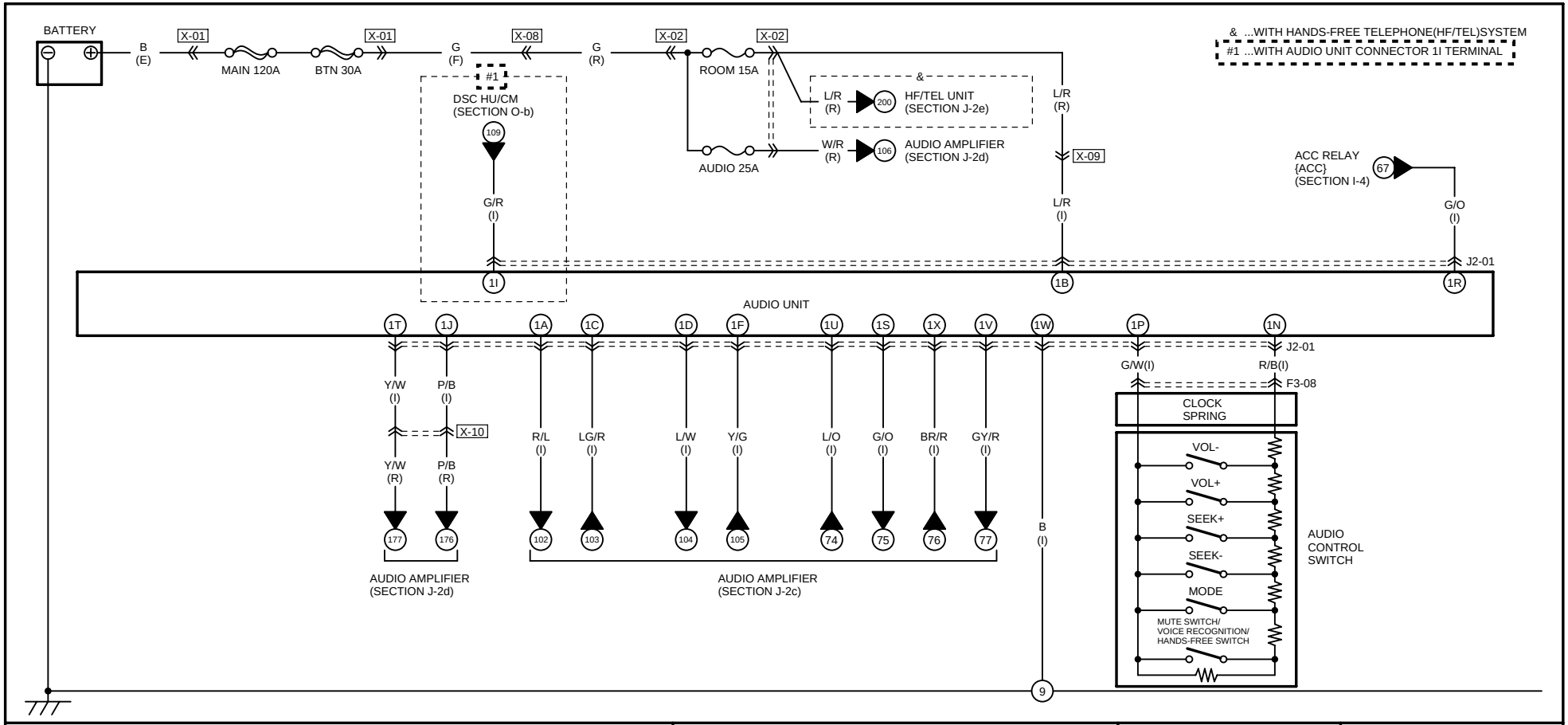

J2-01 AUDIO UNIT(I)

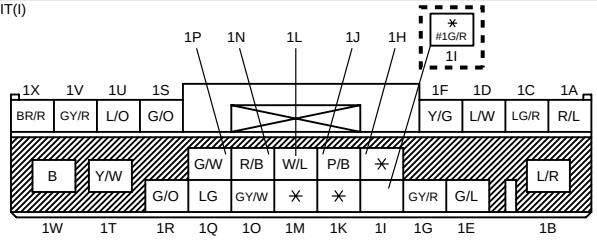

F3-08 AUDIO CONTROL SWITCH(I) (CLOCK SPRING)

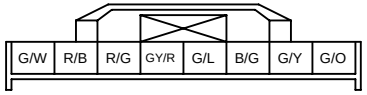

HARNESS SYMBOL: (F) (E) (R)

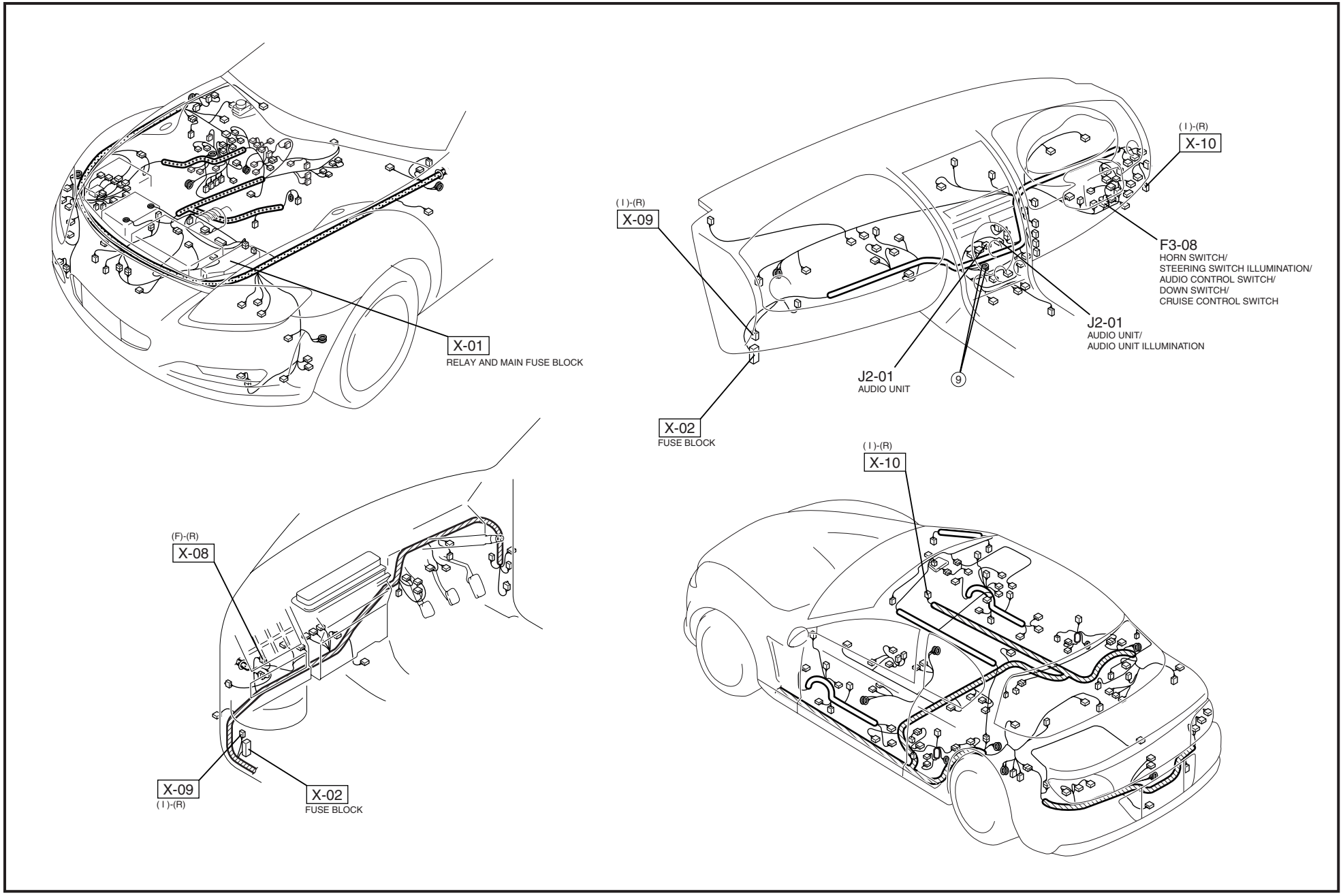

There are two types of circuit (types A and B).

& ...WITH HANDS-FREE TELEPHONE(HF/TEL)SYSTEM
% ...TYPE A
@ ...TYPE B
# ...BARE WIRE

HF/TEL UNIT
(SECTION J-2e)

195 194

P(I) V(I)

J2-01

2J 2B

AUDIO UNIT

TYPE A

TYPE B

2M 2E 2C 2D 2F 2A 1L 2C 2E 2G 2M 2A 1O 1Q

LG/W(I) LG/W(I) B(I)

Y/R(I) LG/B(I) LG/R(I) LG/W(I) # G(I)

SHIELD WIRE

I N X-10

Y/R(R) LG/B(R) LG/R(R) LG/W(R) # G(R)

SHIELD WIRE

J2-15

F C E D B

AUXILIARY JACK

W/L(I)

162

PANEL LIGHT CONTROL SWITCH
(SECTION I-2c)

LG(I) LG/B(I) Y/B(I) Y/R(I) B(I)

SHIELD WIRE

B(I) N X-10

LG(R) LG/B(R) Y/B(R) Y/R(R) B(R)

SHIELD WIRE

J2-15

E C D F

AUXILIARY JACK

J2-01

GY/W(I) LG(I)

165 166

DATA LINK CONNECTOR 2
(SECTION U)

J2-01 AUDIO UNIT(I)

1P 1N 1L 1J 1H

1X 1V 1U 1S 1F 1D 1C 1A

BR/R GY/R L/O G/O Y/G L/W LG/R R/L

B Y/W G/W R/B W/L P/B ✳ L/R

G/O LG GY/W ✳ ✳ ✳ GY/R G/L

1W 1T 1R 1Q 1O 1M 1K 1I 1G 1E 1B

2G 2C

@Y/B %✳ @LG %LG/R

2O 2M 2K 2I 2G 2E 2C 2A

✳ Y/R ✳ ✳ LG/B B

✳ ✳ ✳ ✳ &P ✳ ✳ &V

2P 2N 2L 2J 2H 2F 2D 2B

@✳ %LG/W @✳ %LG/W

2F 2D

There are two types of circuit (types A and B).

J2-15 AUXILIARY JACK(R)

E D B

@LG %LG/R @Y/B %LG/W @✳ %G

Y/R LG/B ✳

F E D C B A

There are two types of circuit (types A and B).

HARNESS SYMBOL: (F) (E) (R)

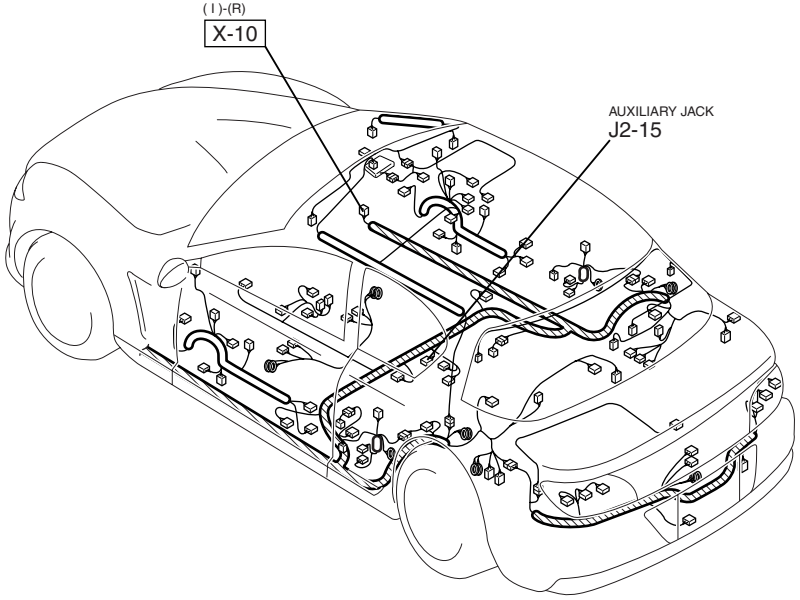

...BARE WIRE

AUDIO UNIT
(SECTION J-3a)

104 105 102 103 74 75 76 77

L/W(I) Y/G(I) R/L(I) LG/R(I) L/O(I) G/O(I) BR/R(I) GY/R(I)

SHIELD WIRE

X-10 W AC

SHIELD WIRE

L/W(R) Y/G(R) R/L(R) LG/R(R) L/O(R) G/O(R) BR/R(R) GY/R(R)

J2-06

3F 3E 3D 3C 3G 3H 3I 3J

AUDIO AMPLIFIER

3O 3P 3B 1C 1D 1E 1F

SHIELD WIRE

BR(R) BR/Y(R) X-10 M

SHIELD WIRE

BR(I) BR/Y(I)

G/R(R)

73

DSC HU/CM
(SECTION O-b)

X-23

B (I)

J2-07

AUDIOPILOT MICROPHONE

B A

B/Y (I)

9 14

P(R) V(R) B/L(R) W/L(R)

B(R) P(R) V(R) J2-02

C A B

REAR TWEETER LH

P(R) V(R) J2-04

REAR SPEAKER LH

B/L(R) W/L(R) J2-05

REAR SPEAKER RH

B(R) B/L(R) W/L(R) J2-03

REAR TWEETER RH

15

B(I) B(I) B(I) B/Y(I)

9

J2-02 REAR TWEETER LH(R)

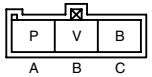

J2-03 REAR TWEETER RH(R)

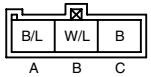

J2-04 REAR SPEAKER LH(R)

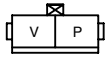

J2-05 REAR SPEAKER RH(R)

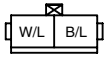

J2-06 AUDIO AMPLIFIER(R)

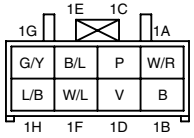

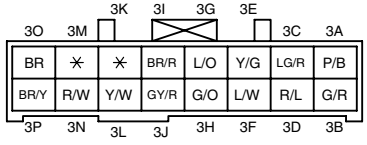

J2-07 AUDIOPILOT MICROPHONE(I)

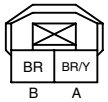

"AudioPilot" is a registered trademark of Bose Corporation.

HARNESS SYMBOL: (F) (E) (R)

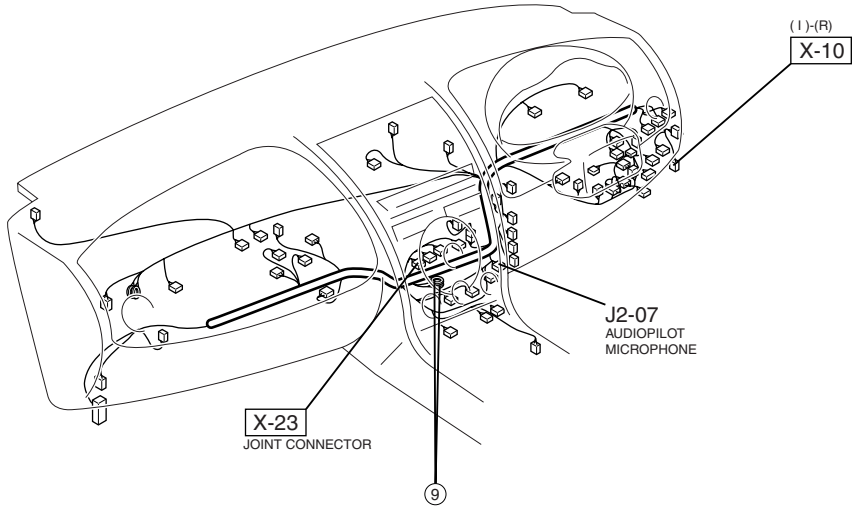

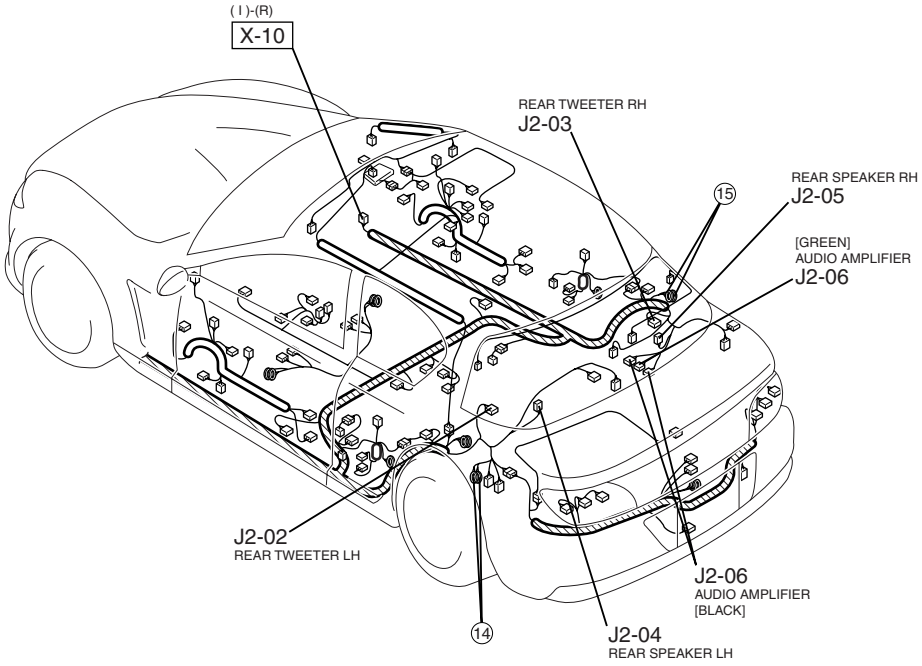

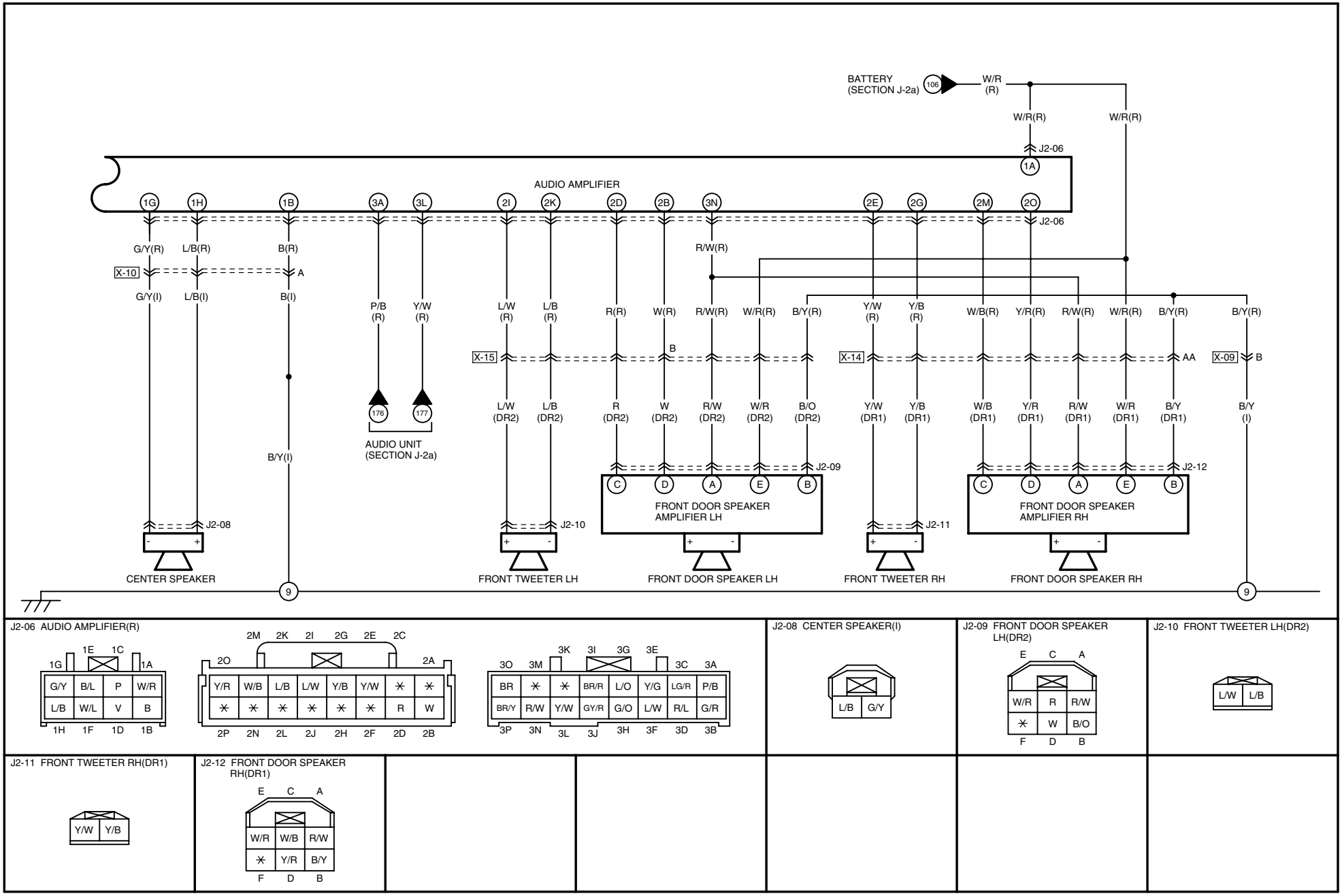
BATTERY
(SECTION J-2a)
106
W/R
(R)
W/R(R)
W/R(R)
J2-06
1A
AUDIO AMPLIFIER
1G
1H
1B
3A
3L
2I
2K
2D
2B
3N
2E
2G
2M
2O
J2-06
G/Y(R)
L/B(R)
B(R)
R/W(R)
X-10
A
G/Y(I)
L/B(I)
B(I)
P/B
(R)
Y/W
(R)
L/W
(R)
L/B
(R)
R(R)
W(R)
R/W(R)
W/R(R)
B/Y(R)
Y/W
(R)
Y/B
(R)
W/B(R)
Y/R(R)
R/W(R)
W/R(R)
B/Y(R)
B/Y(R)
X-15
B
X-14
AA
X-09
B
176
177
AUDIO UNIT
(SECTION J-2a)
B/Y(I)
L/W
(DR2)
L/B
(DR2)
R
(DR2)
W
(DR2)
R/W
(DR2)
W/R
(DR2)
B/O
(DR2)
Y/W
(DR1)
Y/B
(DR1)
W/B
(DR1)
Y/R
(DR1)
R/W
(DR1)
W/R
(DR1)
B/Y
(DR1)
B/Y
(I)
J2-09
J2-12
C
D
A
E
B
FRONT DOOR SPEAKER
AMPLIFIER LH
FRONT DOOR SPEAKER
AMPLIFIER RH
J2-08
J2-10
J2-11
CENTER SPEAKER
FRONT TWEETER LH
FRONT DOOR SPEAKER LH
FRONT TWEETER RH
FRONT DOOR SPEAKER RH
9
9
J2-06 AUDIO AMPLIFIER(R)
1G 1E 1C 1A
G/Y B/L P W/R
L/B W/L V B
1H 1F 1D 1B
2M 2K 2I 2G 2E 2C
2O 2A
Y/R W/B L/B L/W Y/B Y/W R W
2P 2N 2L 2J 2H 2F 2D 2B
3K 3I 3G 3E
3O 3M 3C 3A
BR BR/R L/O Y/G LG/R P/B
BR/Y R/W Y/W GY/R G/O L/W R/L G/R
3P 3N 3L 3J 3H 3F 3D 3B
J2-08 CENTER SPEAKER(I)
L/B G/Y
J2-09 FRONT DOOR SPEAKER
LH(DR2)
E C A
W/R R R/W
W B/O
F D B
J2-10 FRONT TWEETER LH(DR2)
L/W L/B
J2-11 FRONT TWEETER RH(DR1)
Y/W Y/B
J2-12 FRONT DOOR SPEAKER
RH(DR1)
E C A
W/R W/B R/W
Y/R B/Y
F D B

HARNESS SYMBOL: (F) (E) (R)

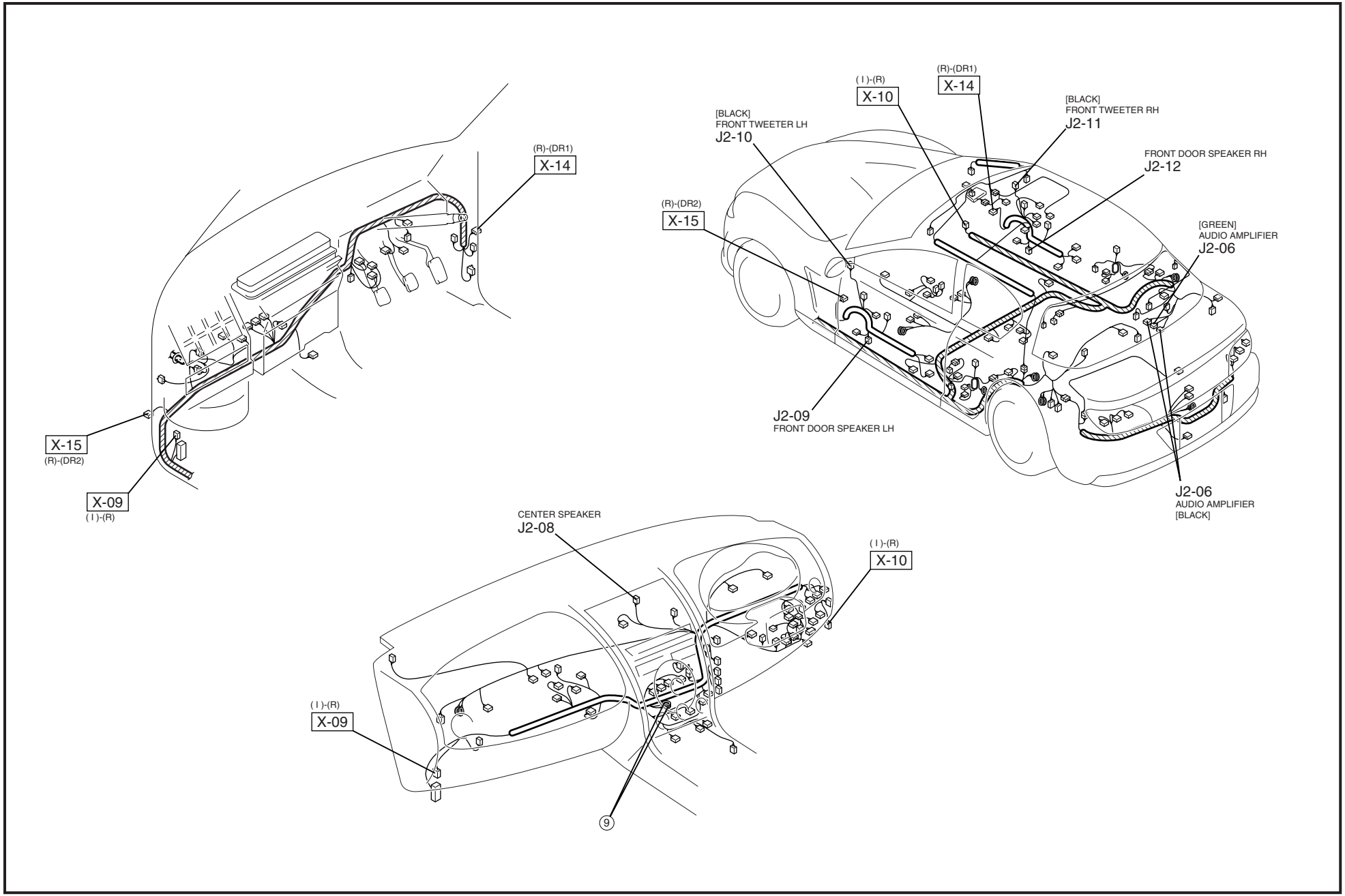

There are two types of circuit (types A and B). < >...NOT USED % ...TYPE A @ ...TYPE B

DATA LINK CONNECTOR 2 (SECTION U)

ACC RELAY {ACC} (SECTION I-4)

BATTERY (SECTION J-2a)

197 198 199 200

GY/W(R) LG(R) G/O(R) L/R(R)

J2-17

Q R W X

HF/TEL UNIT

TYPE B

TYPE A

J F D B U T G H L J D B U

J2-17

B(R) L(R) Y(R) W(R) R(R) O(R) SHIELD WIRE

AH B(R) AB B(I) L(I) Y(I) W(I) R(I) O(I) SHIELD WIRE

J2-18

F D B A C

MICROPHONE

B(R) AG B(I)

SHIELD WIRE V(R) P(R) B(R) AX B(I) V(I) P(I) SHIELD WIRE

194 195

AUDIO UNIT (SECTION J-2b)

B(R) B/W(R) B/W(I) X-23 B(I) B(I) B/Y(I)

B(R) W(R) R(R) L(R) SHIELD WIRE X-10

B/L(R) Z B/L(I) B(I) W(I) R(I) L(I) SHIELD WIRE

J2-18

F B A C

MICROPHONE

9 9

WITH HANDS-FREE TELEPHONE(HF/TEL)SYSTEM

J2-17 HF/TEL UNIT(R)

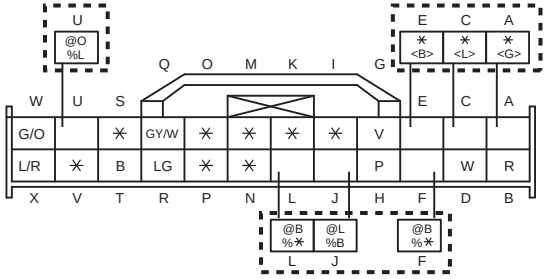

There are two types of circuit (types A and B).

J2-18 MICROPHONE(I)

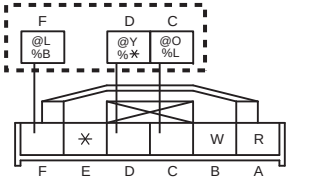

There are two types of circuit (types A and B).

HARNESS SYMBOL: (F) (E) (R)

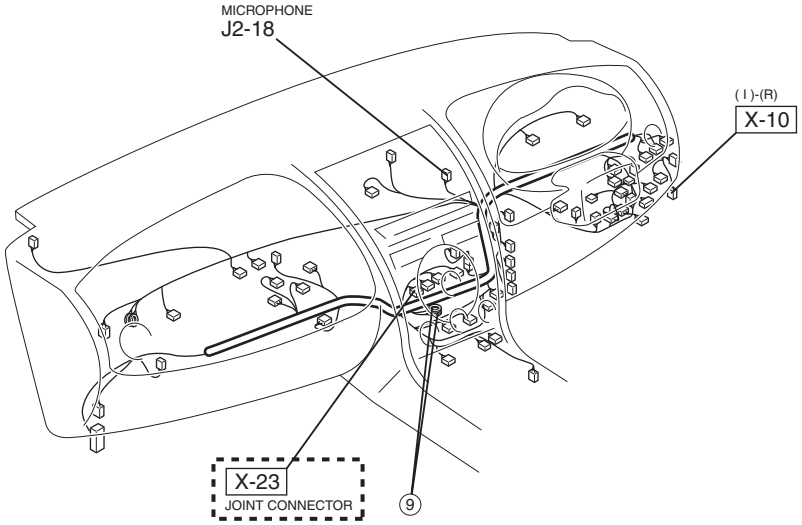

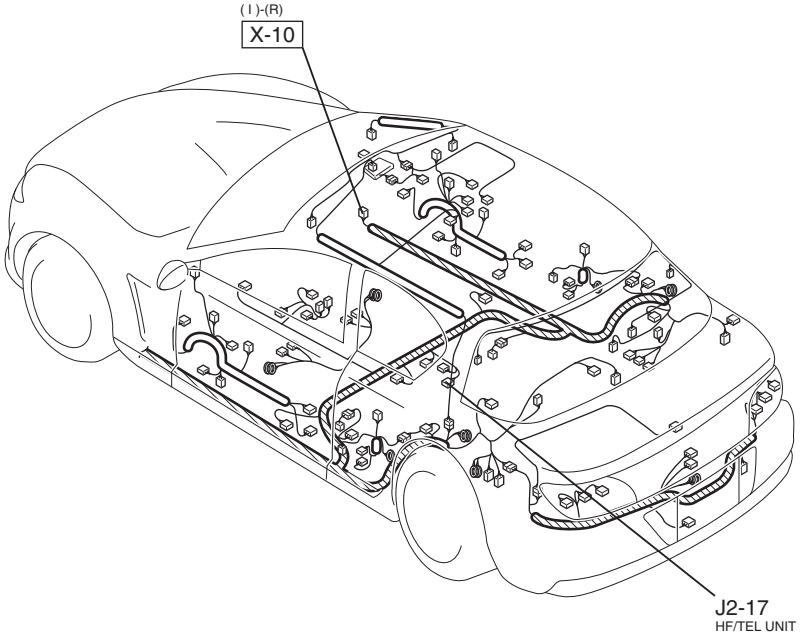

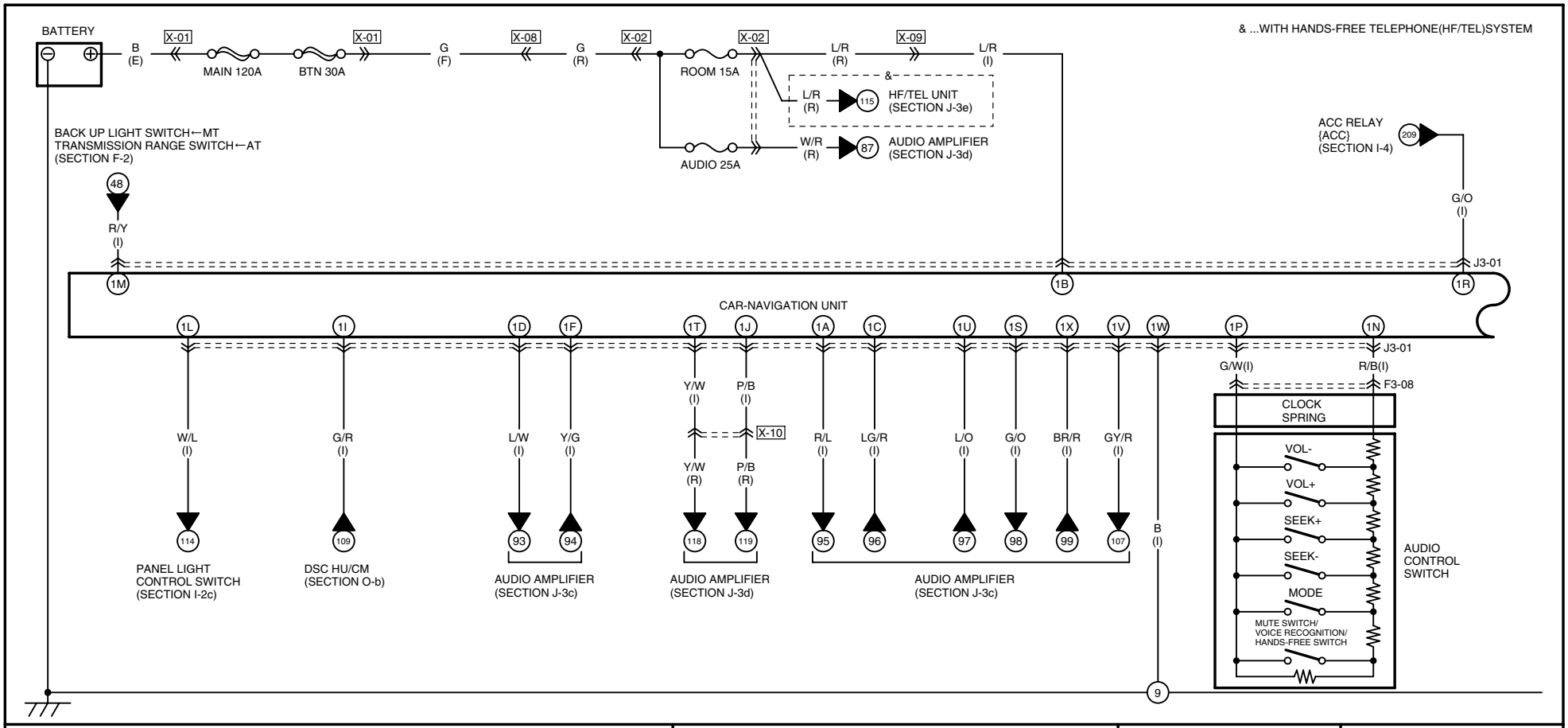

J3-01 CAR-NAVIGATION UNIT(I)

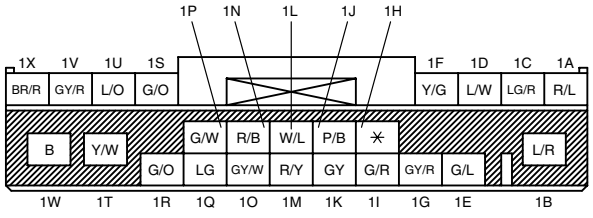

F3-08 AUDIO CONTROL SWITCH(I)
(CLOCK SPRING)

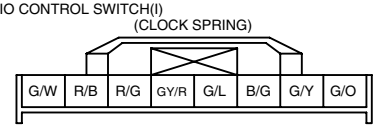

HARNESS SYMBOL: (F) (E) (R)

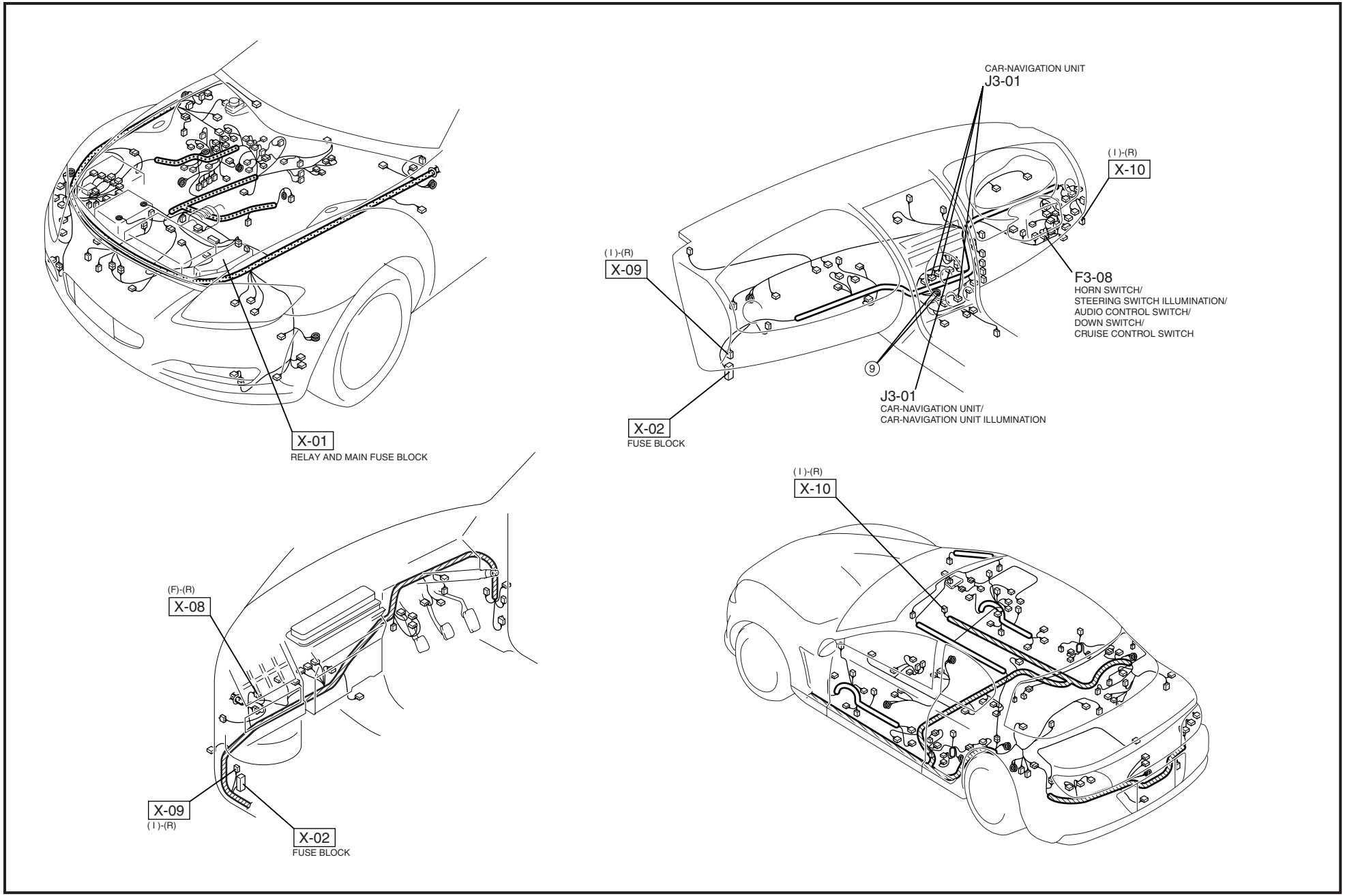

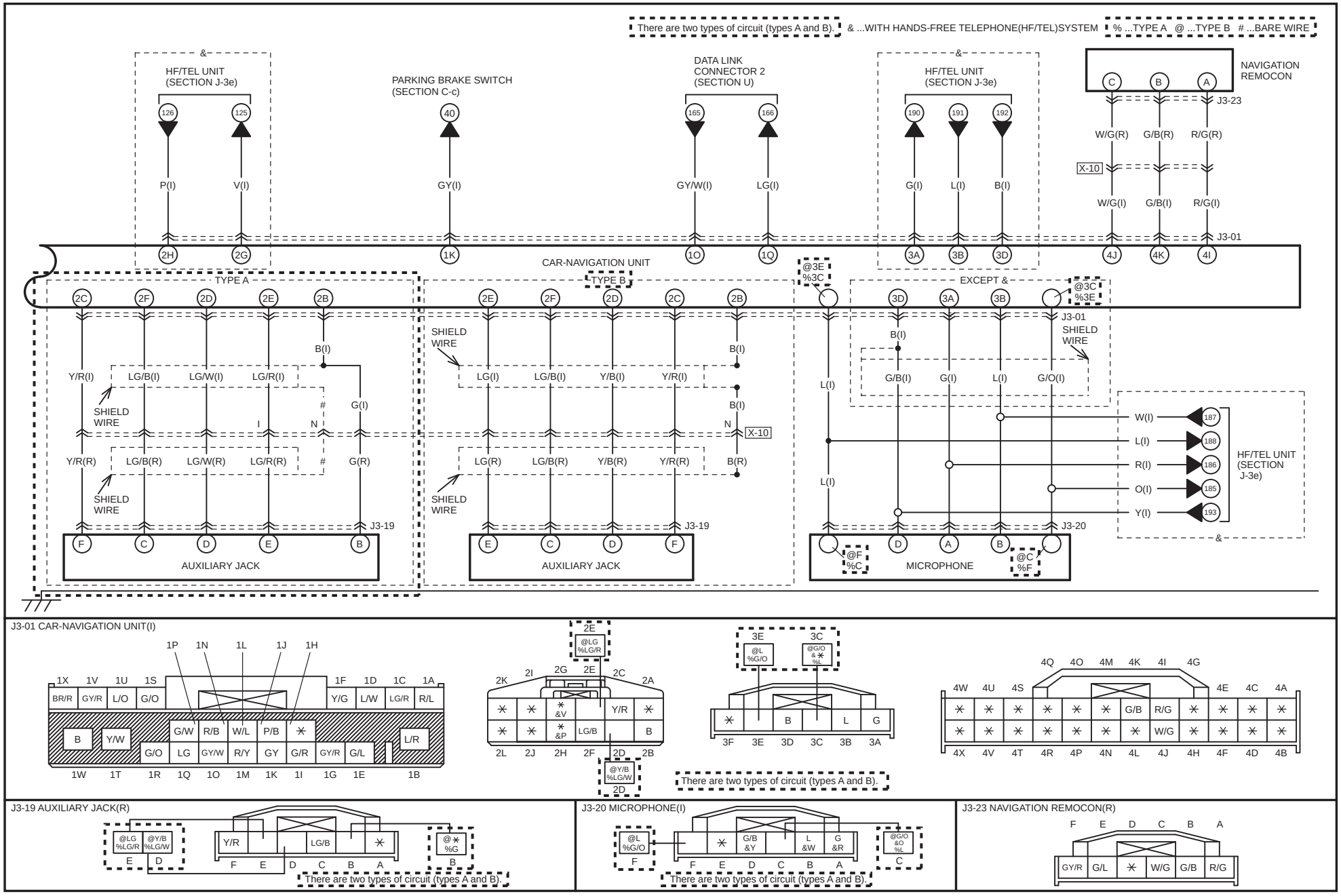
There are two types of circuit (types A and B).
& ...WITH HANDS-FREE TELEPHONE(HF/TEL)SYSTEM
% ...TYPE A @ ...TYPE B # ...BARE WIRE
HF/TEL UNIT (SECTION J-3e)
PARKING BRAKE SWITCH (SECTION C-c)
DATA LINK CONNECTOR 2 (SECTION U)
NAVIGATION REMOCON
J3-23
W/G(R) G/B(R) R/G(R)
X-10
W/G(I) G/B(I) R/G(I)
J3-01
P(I) V(I) GY(I) GY/W(I) LG(I) G(I) L(I) B(I)
CAR-NAVIGATION UNIT
TYPE A
TYPE B
EXCEPT &
@3E %3C
@3C %3E
SHIELD WIRE
Y/R(I) LG/B(I) LG/W(I) LG/R(I) G(I)
Y/R(R) LG/B(R) LG/W(R) LG/R(R) G(R)
LG(I) LG/B(I) Y/B(I) Y/R(I)
LG(R) LG/B(R) Y/B(R) Y/R(R)
B(I) B(R)
G/B(I) G(I) L(I) G/O(I)
W(I) L(I) R(I) O(I) Y(I)
HF/TEL UNIT (SECTION J-3e)
J3-19
J3-20
AUXILIARY JACK
MICROPHONE
@F %C
@C %F
J3-01 CAR-NAVIGATION UNIT(I)
J3-19 AUXILIARY JACK(R)
J3-20 MICROPHONE(I)
J3-23 NAVIGATION REMOCON(R)
@LG %LG/R
@Y/B %LG/W
@L %G/O
@G/O &L %L
@Y/B %LG/W
@ %G
There are two types of circuit (types A and B).

HARNESS SYMBOL: (F) (E) (R)

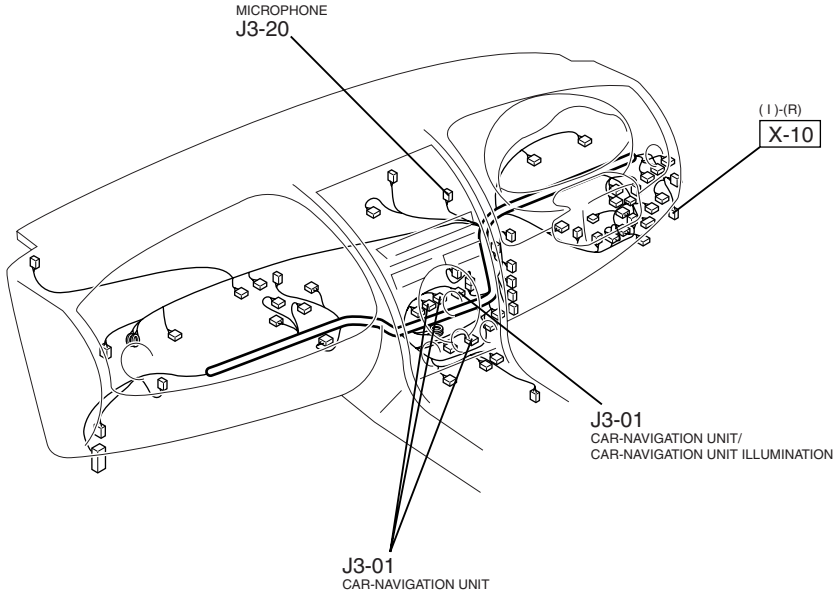

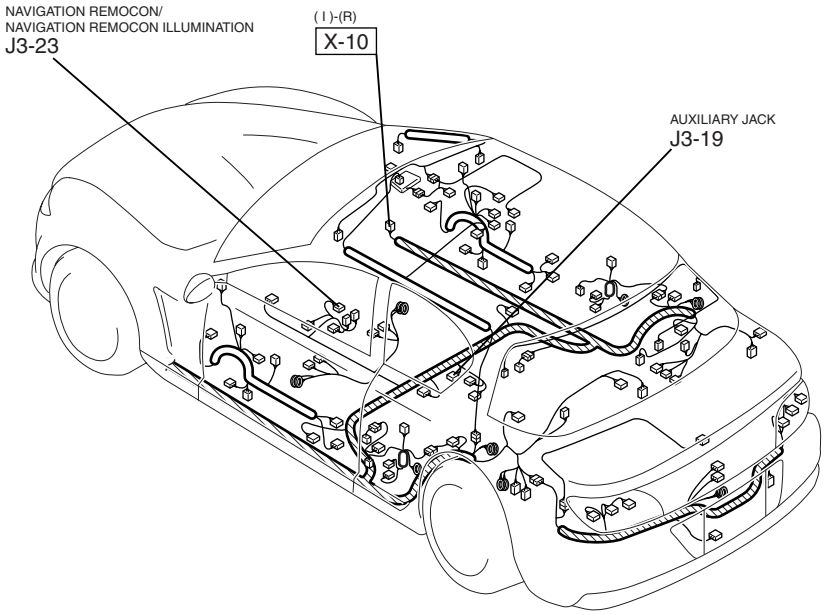

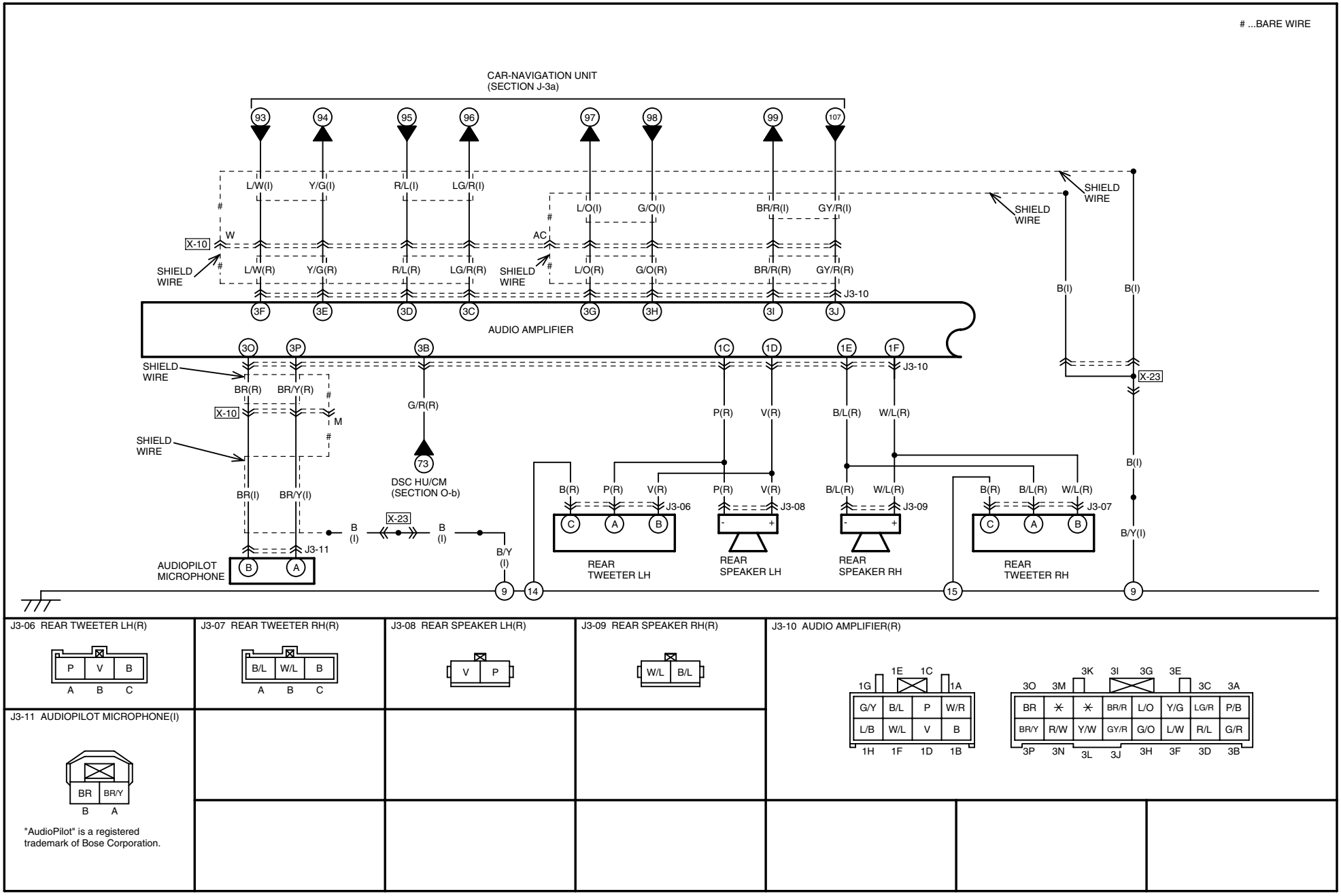

J3-06 REAR TWEETER LH(R)

J3-07 REAR TWEETER RH(R)

J3-08 REAR SPEAKER LH(R)

J3-09 REAR SPEAKER RH(R)

J3-10 AUDIO AMPLIFIER(R)

J3-11 AUDIOPILOT MICROPHONE(I)

"AudioPilot" is a registered trademark of Bose Corporation.

HARNESS SYMBOL: (F) (E) (R)

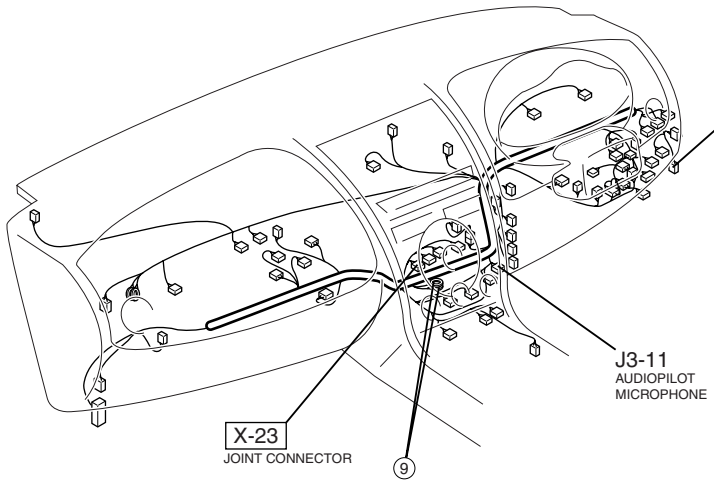

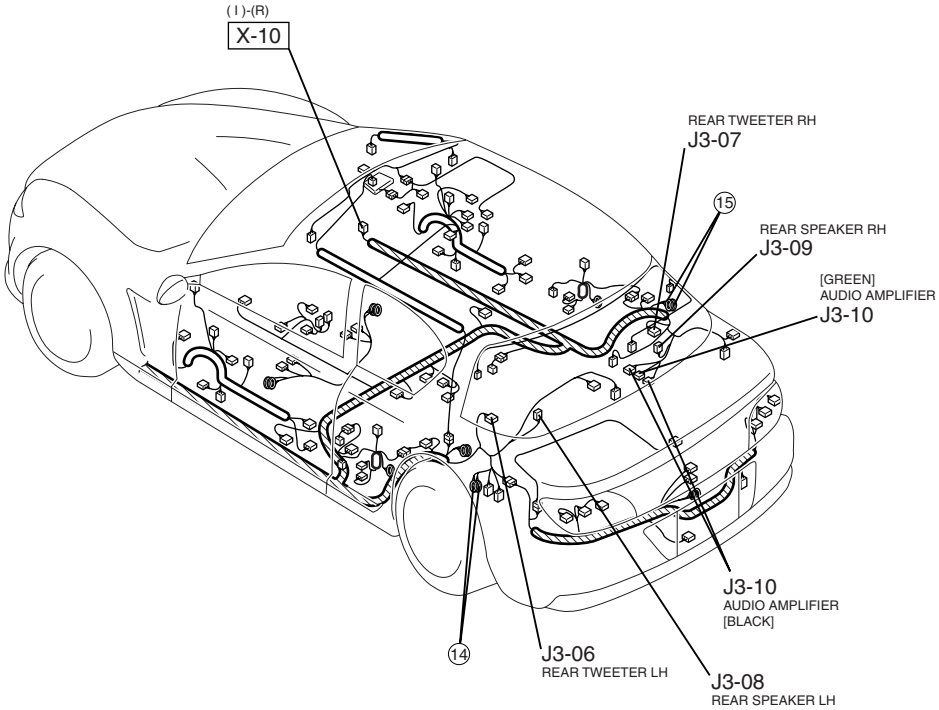

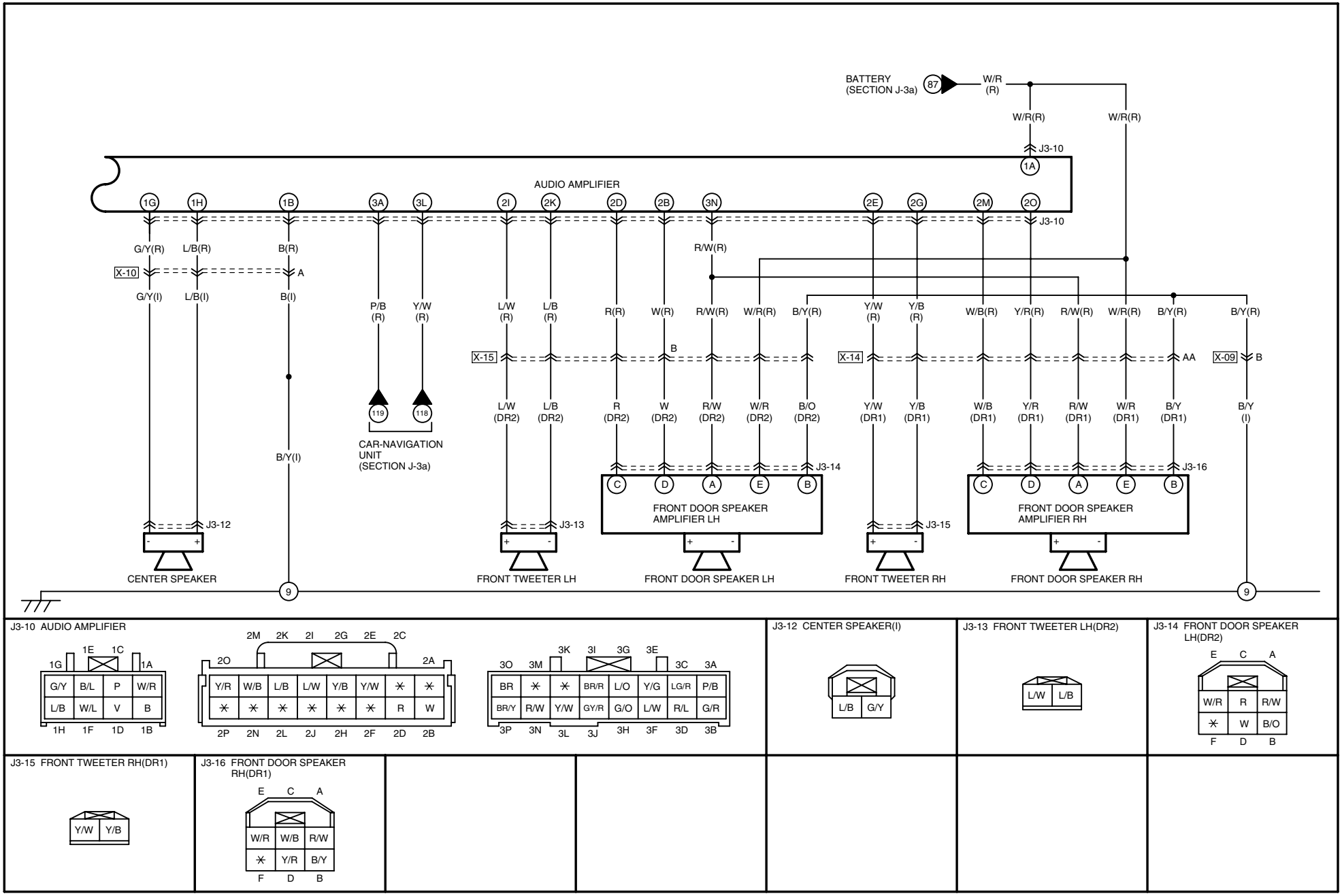
BATTERY (SECTION J-3a)
87
W/R (R)
W/R(R)
W/R(R)
J3-10
1A
AUDIO AMPLIFIER
1G 1H 1B 3A 3L 2I 2K 2D 2B 3N 2E 2G 2M 2O
J3-10
G/Y(R) L/B(R) B(R)
R/W(R)
X-10
A
G/Y(I) L/B(I) B(I)
P/B (R) Y/W (R)
L/W (R) L/B (R) R(R) W(R) R/W(R) W/R(R) B/Y(R) Y/W (R) Y/B (R) W/B(R) Y/R(R) R/W(R) W/R(R) B/Y(R) B/Y(R)
X-15
B
X-14
AA
X-09
B
119 118
CAR-NAVIGATION UNIT (SECTION J-3a)
L/W (DR2) L/B (DR2) R (DR2) W (DR2) R/W (DR2) W/R (DR2) B/O (DR2) Y/W (DR1) Y/B (DR1) W/B (DR1) Y/R (DR1) R/W (DR1) W/R (DR1) B/Y (DR1) B/Y (I)
B/Y(I)
J3-14
J3-16
C D A E B
FRONT DOOR SPEAKER AMPLIFIER LH
FRONT DOOR SPEAKER AMPLIFIER RH
J3-12
J3-13
J3-15
CENTER SPEAKER
FRONT TWEETER LH
FRONT DOOR SPEAKER LH
FRONT TWEETER RH
FRONT DOOR SPEAKER RH
9
9
J3-10 AUDIO AMPLIFIER
1G 1E 1C 1A
G/Y B/L P W/R
L/B W/L V B
1H 1F 1D 1B
2M 2K 2I 2G 2E 2C
2O 2A
Y/R W/B L/B L/W Y/B Y/W R W
2P 2N 2L 2J 2H 2F 2D 2B
3O 3M 3K 3I 3G 3E 3C 3A
BR BR/R L/O Y/G LG/R P/B
BR/Y R/W Y/W GY/R G/O L/W R/L G/R
3P 3N 3L 3J 3H 3F 3D 3B
J3-12 CENTER SPEAKER(I)
L/B G/Y
J3-13 FRONT TWEETER LH(DR2)
L/W L/B
J3-14 FRONT DOOR SPEAKER LH(DR2)
E C A
W/R R R/W
W B/O
F D B
J3-15 FRONT TWEETER RH(DR1)
Y/W Y/B
J3-16 FRONT DOOR SPEAKER RH(DR1)
E C A
W/R W/B R/W
Y/R B/Y
F D B

HARNESS SYMBOL: (F) (E) (R)

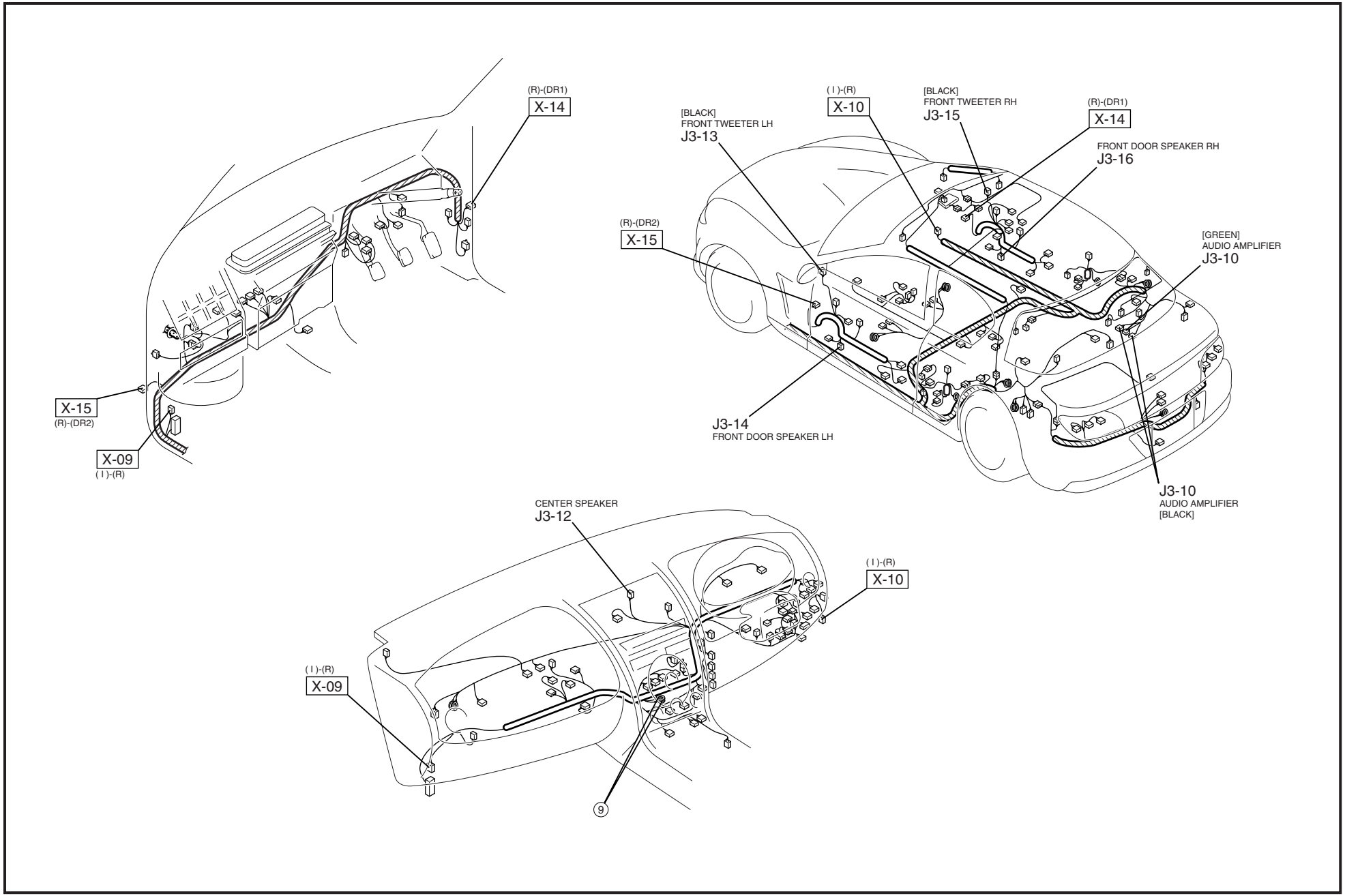

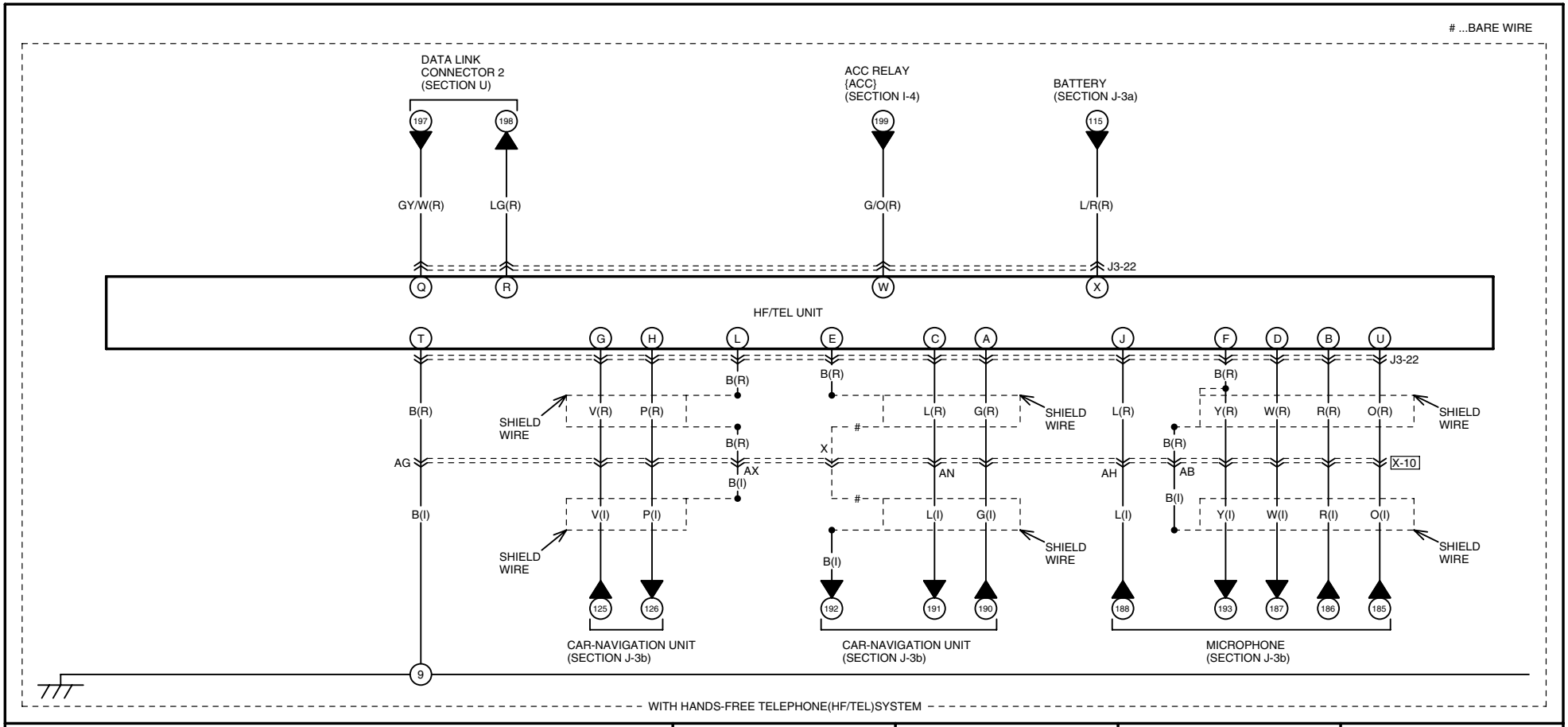

J3-22 HF/TEL UNIT(R)

	Q	O	M	K	I	G					
W	U	S						E	C	A	
G/O	O	✳	GY/W	✳	✳	✳	✳	V	B	L	G
L/R	✳	B	LG	✳	✳	B	L	P	B	W	R
X	V	T	R	P	N	L	J	H	F	D	B

HARNESS SYMBOL: (F) (E) (R)

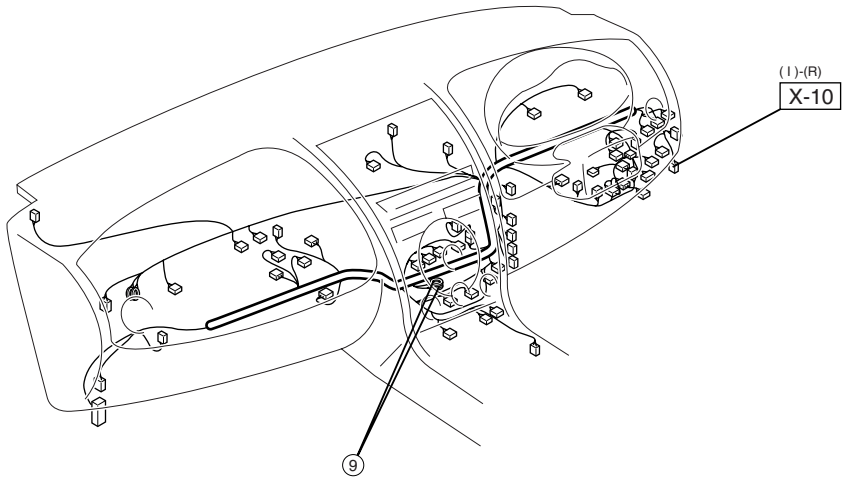

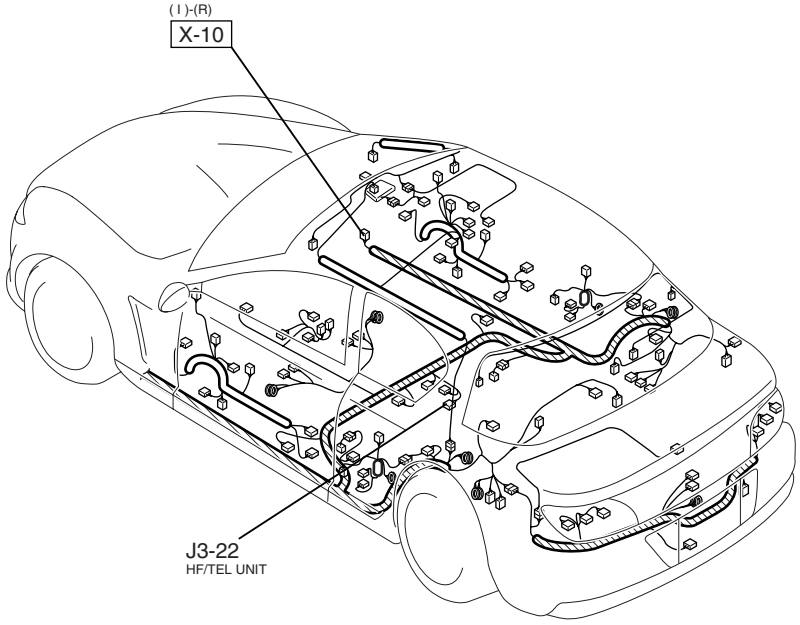

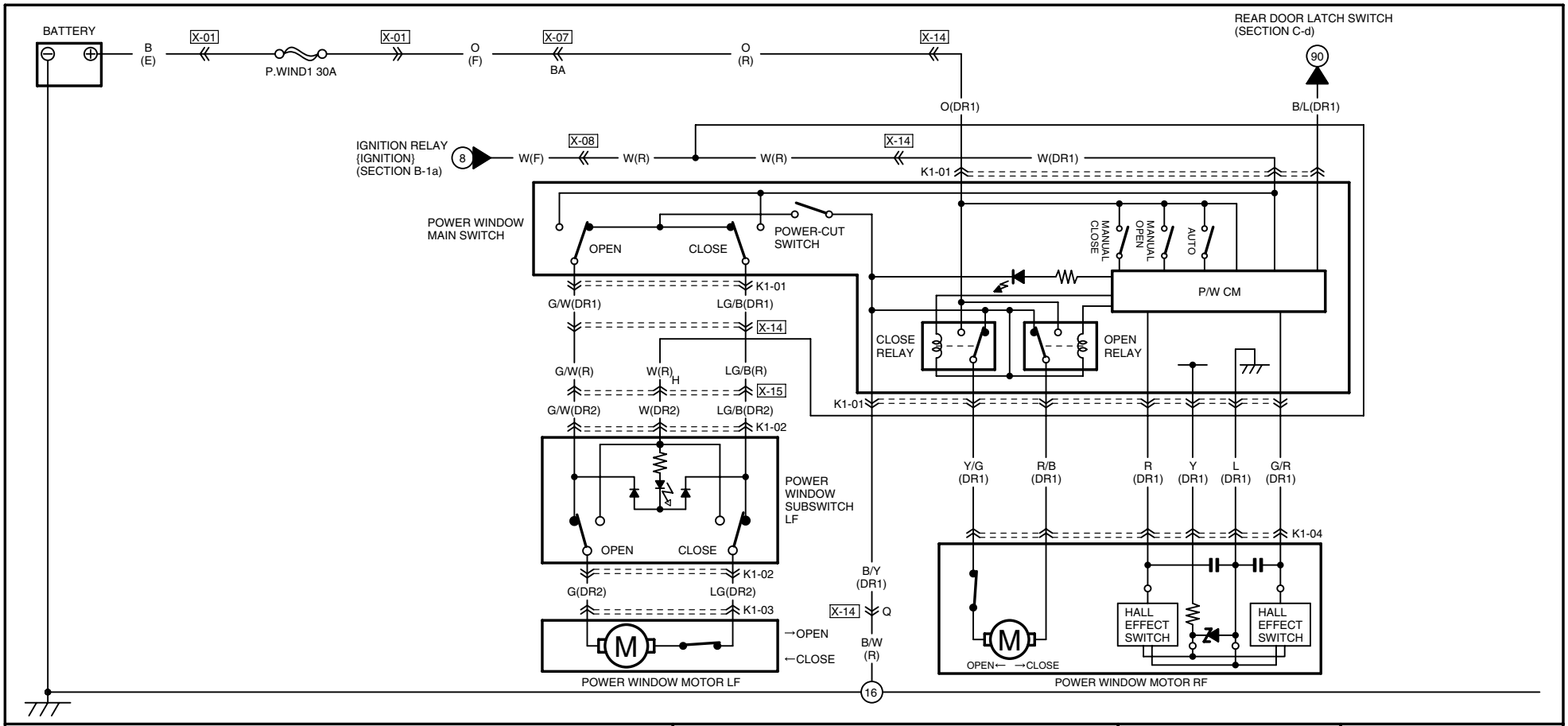

K1-01 POWER WINDOW MAIN SWITCH(DR1)

R/B	G/R	L	B/Y	✳	✳	O	Y	Y/G
✳	R	W	✳	✳	G/W	LG/B	✳	B/L

K1-02 POWER WINDOW SUBSWITCH LF(DR2)

LG	W	✳	G	G/W	LG/B

K1-03 POWER WINDOW MOTOR LF(DR2)

G	✳	✳
LG	✳	✳

K1-04 POWER WINDOW MOTOR RF(DR1)

R/B	L	R
Y/G	Y	G/R

HARNESS SYMBOL: (F) (E) (R)

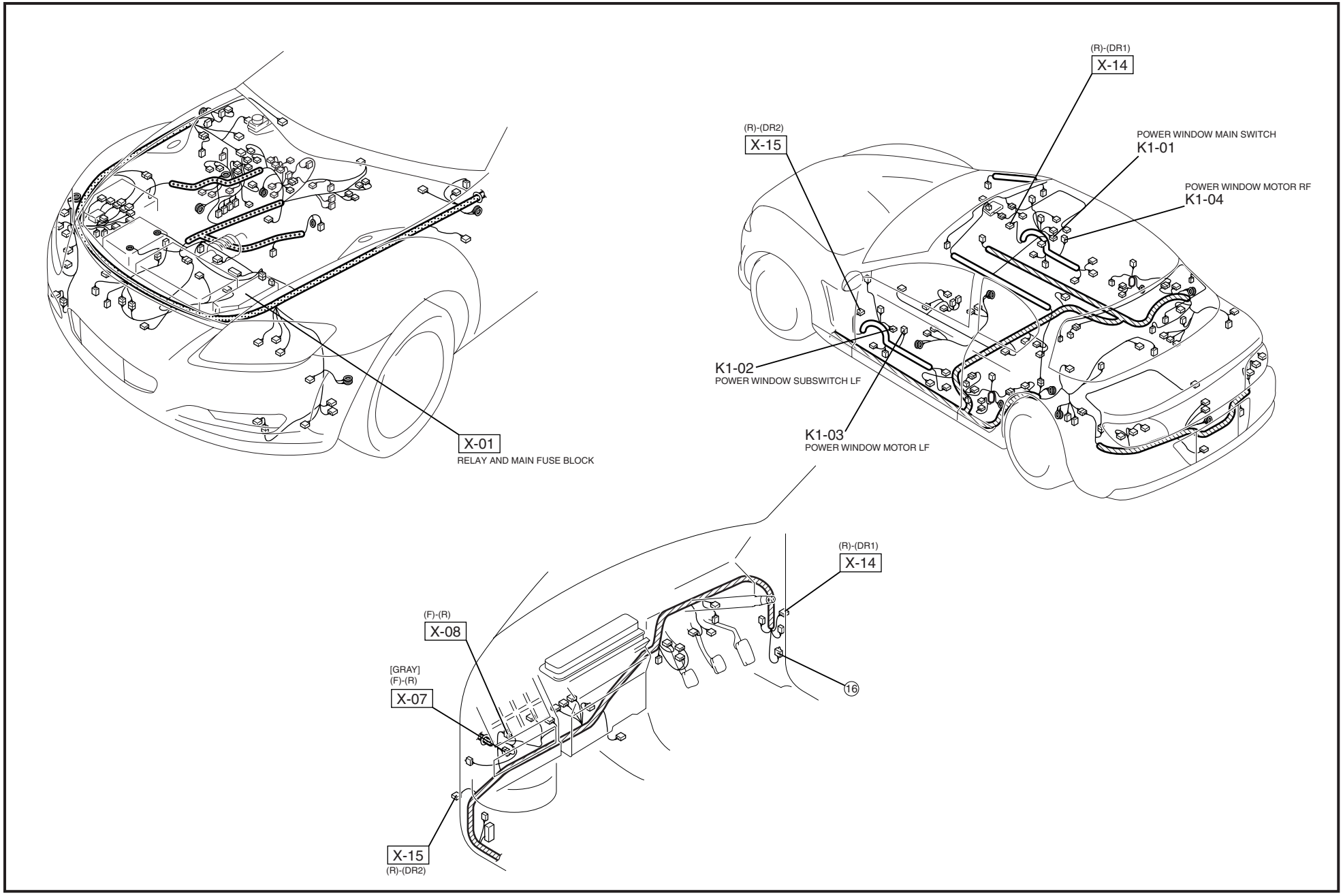

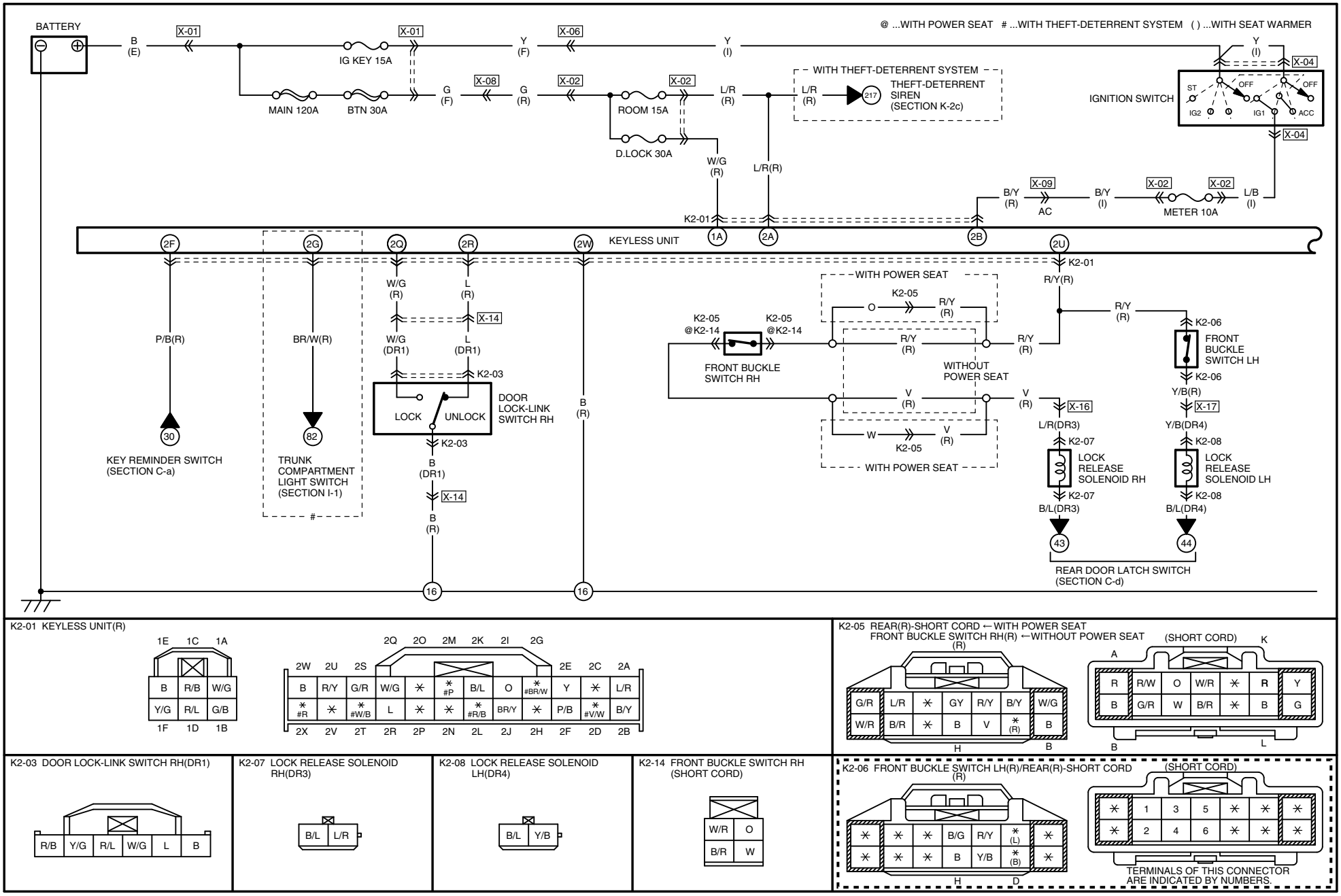
@ ...WITH POWER SEAT # ...WITH THEFT-DETERRENT SYSTEM ( ) ...WITH SEAT WARMER
BATTERY
B (E)
X-01
IG KEY 15A
MAIN 120A
BTN 30A
Y (F)
X-06
Y (I)
G (F)
X-08
G (R)
X-02
ROOM 15A
D.LOCK 30A
L/R (R)
WITH THEFT-DETERRENT SYSTEM
THEFT-DETERRENT SIREN (SECTION K-2c)
IGNITION SWITCH
X-04
W/G (R)
L/R(R)
B/Y (R)
X-09
AC
B/Y (I)
METER 10A
L/B (I)
K2-01
KEYLESS UNIT
P/B(R)
BR/W(R)
W/G (DR1)
L (DR1)
X-14
K2-03
DOOR LOCK-LINK SWITCH RH
LOCK
UNLOCK
B (DR1)
B (R)
KEY REMINDER SWITCH (SECTION C-a)
TRUNK COMPARTMENT LIGHT SWITCH (SECTION I-1)
WITH POWER SEAT
WITHOUT POWER SEAT
K2-05 @K2-14
FRONT BUCKLE SWITCH RH
R/Y (R)
V (R)
W
R/Y(R)
K2-06
FRONT BUCKLE SWITCH LH
Y/B(R)
X-16
X-17
L/R(DR3)
Y/B(DR4)
K2-07
K2-08
LOCK RELEASE SOLENOID RH
LOCK RELEASE SOLENOID LH
B/L(DR3)
B/L(DR4)
REAR DOOR LATCH SWITCH (SECTION C-d)
K2-01 KEYLESS UNIT(R)
K2-05 REAR(R)-SHORT CORD ← WITH POWER SEAT
FRONT BUCKLE SWITCH RH(R) ← WITHOUT POWER SEAT
(SHORT CORD)
K2-03 DOOR LOCK-LINK SWITCH RH(DR1)
K2-07 LOCK RELEASE SOLENOID RH(DR3)
K2-08 LOCK RELEASE SOLENOID LH(DR4)
K2-14 FRONT BUCKLE SWITCH RH (SHORT CORD)
K2-06 FRONT BUCKLE SWITCH LH(R)/REAR(R)-SHORT CORD
TERMINALS OF THIS CONNECTOR ARE INDICATED BY NUMBERS.

HARNESS SYMBOL: (F) (E) (R)

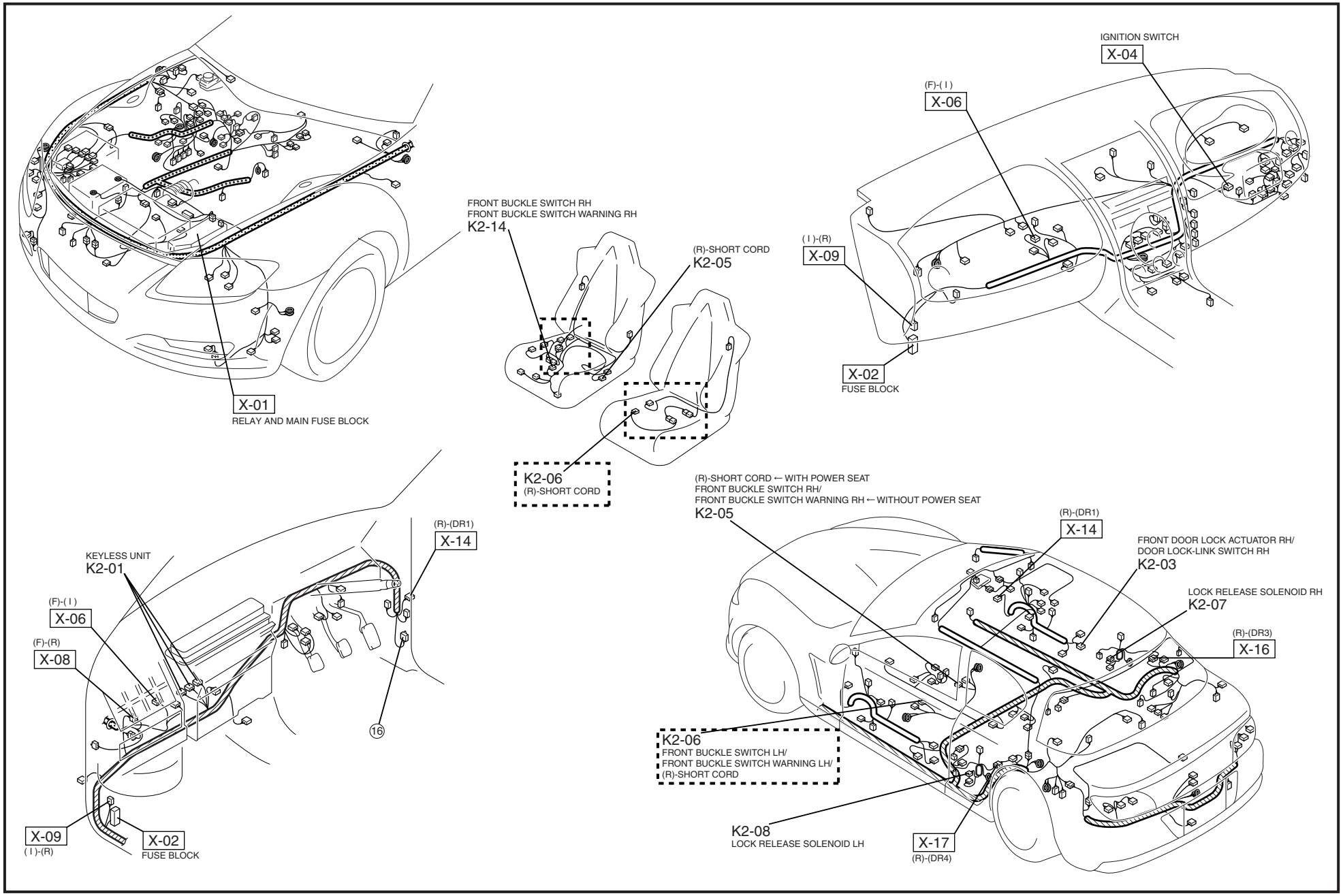

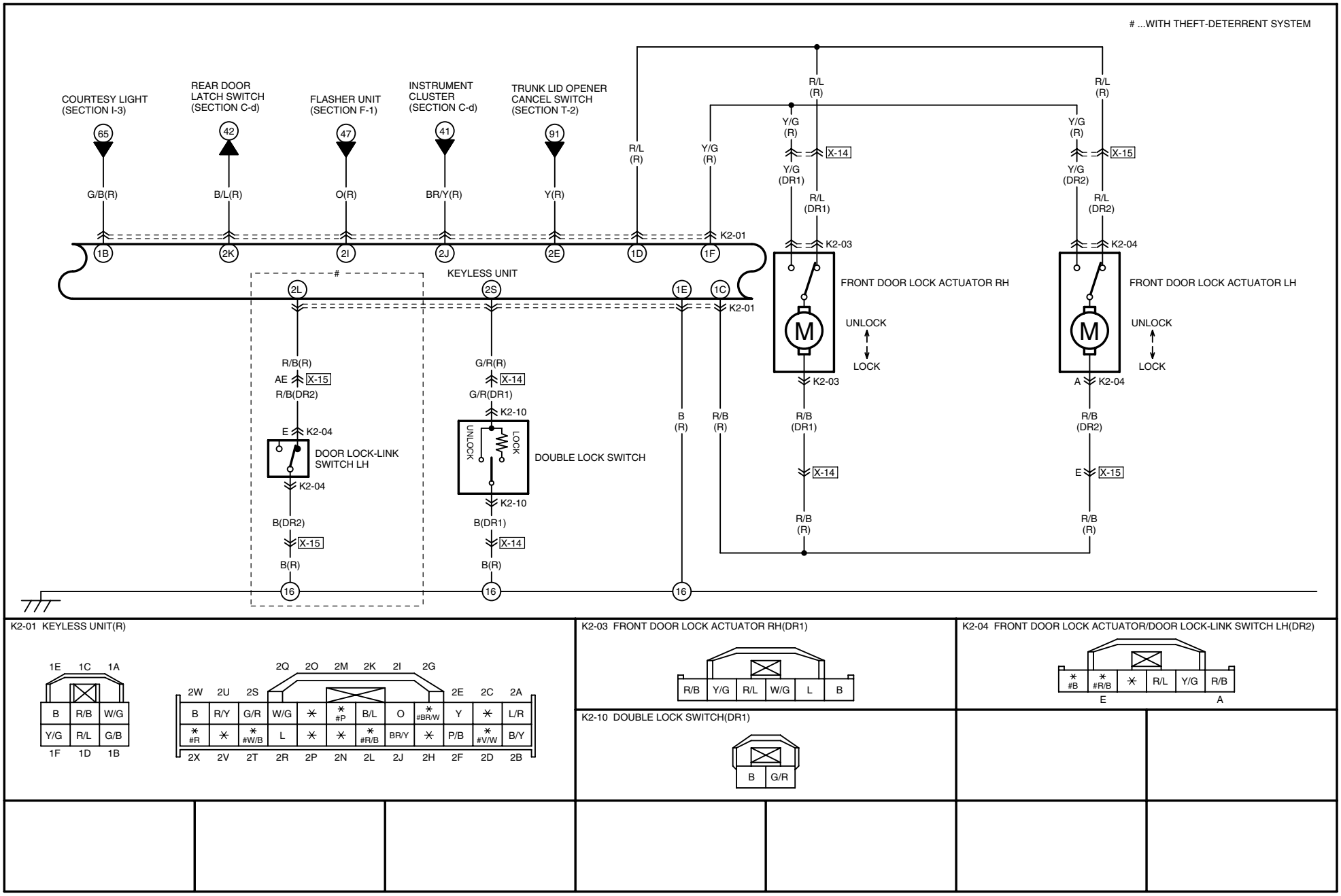
...WITH THEFT-DETERRENT SYSTEM
COURTESY LIGHT (SECTION I-3)
REAR DOOR LATCH SWITCH (SECTION C-d)
FLASHER UNIT (SECTION F-1)
INSTRUMENT CLUSTER (SECTION C-d)
TRUNK LID OPENER CANCEL SWITCH (SECTION T-2)
65
42
47
41
91
G/B(R)
B/L(R)
O(R)
BR/Y(R)
Y(R)
R/L (R)
Y/G (R)
Y/G (DR1)
R/L (DR1)
Y/G (DR2)
R/L (DR2)
X-14
X-15
K2-01
K2-03
K2-04
1B
2K
2I
2J
2E
1D
1F
KEYLESS UNIT
2L
2S
1E
1C
FRONT DOOR LOCK ACTUATOR RH
FRONT DOOR LOCK ACTUATOR LH
UNLOCK
LOCK
M
R/B(R)
AE
R/B(DR2)
G/R(R)
G/R(DR1)
K2-10
E
DOOR LOCK-LINK SWITCH LH
DOUBLE LOCK SWITCH
B(DR2)
B(DR1)
B(R)
R/B (R)
R/B (DR1)
R/B (DR2)
A
16
K2-01 KEYLESS UNIT(R)
1E 1C 1A
B R/B W/G
Y/G R/L G/B
1F 1D 1B
2Q 2O 2M 2K 2I 2G
2W 2U 2S 2E 2C 2A
B R/Y G/R W/G * #P B/L O * #BR/W Y * L/R
* #R * * #W/B L * * * #R/B BR/Y * P/B * #V/W B/Y
2X 2V 2T 2R 2P 2N 2L 2J 2H 2F 2D 2B
K2-03 FRONT DOOR LOCK ACTUATOR RH(DR1)
R/B Y/G R/L W/G L B
K2-04 FRONT DOOR LOCK ACTUATOR/DOOR LOCK-LINK SWITCH LH(DR2)
* #B * #R/B * R/L Y/G R/B
E A
K2-10 DOUBLE LOCK SWITCH(DR1)
B G/R

HARNESS SYMBOL: (F) (E) (R)

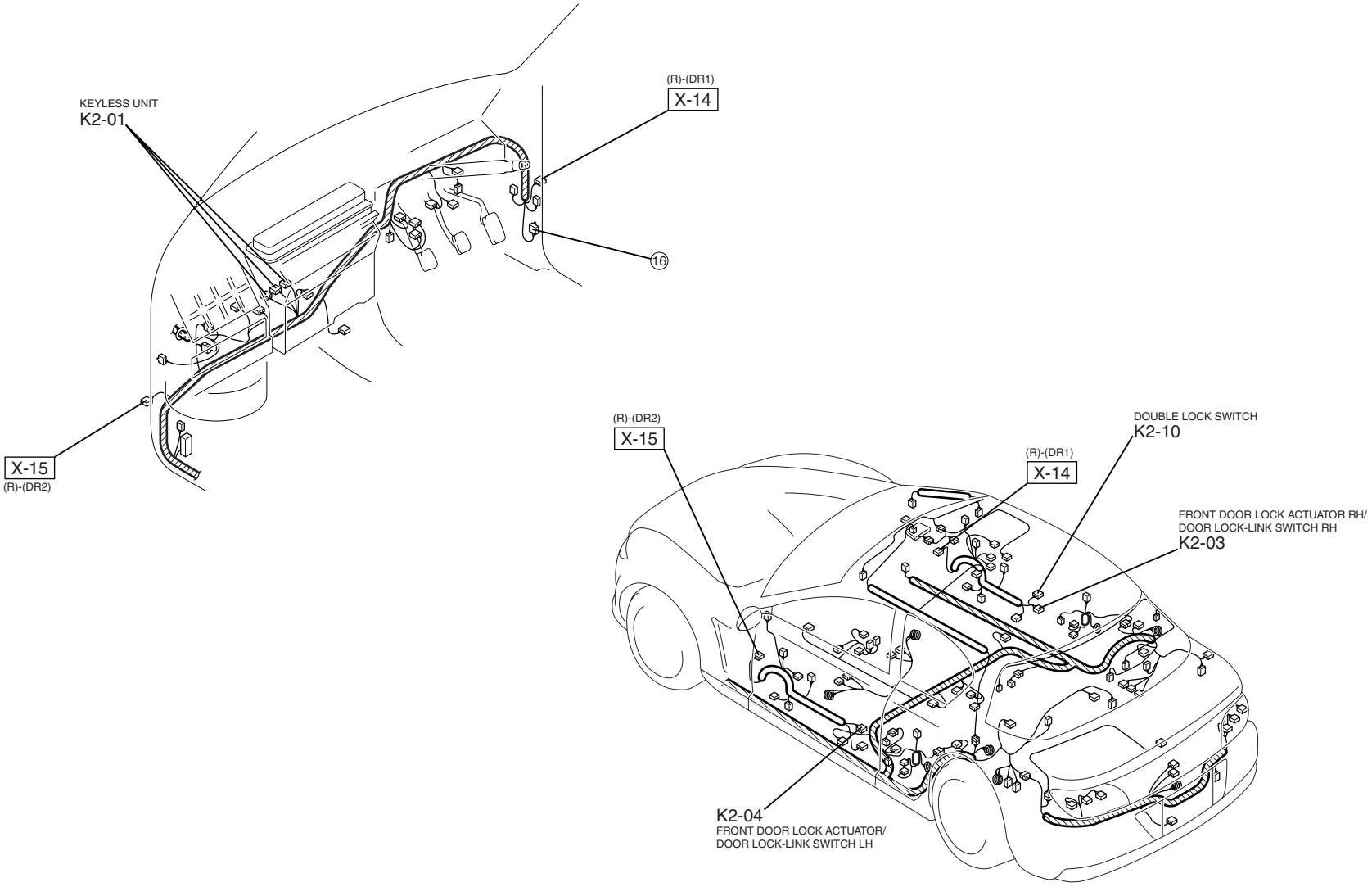

...WITH THEFT-DETERRENT SYSTEM

COIL (SECTION T-1)
PCM (SECTION B-1i)
84 85 A B
L/O (R) Y/B (R) G/B (R) L/W (R)
K2-01
3E 3F 3B 3A
KEYLESS UNIT
CAN_L CAN_H
WITH THEFT-DETERRENT SYSTEM
2D 2T 2M 2X
K2-01
P(R) R(R)
X-13
B(IN2) P(IN2) R(IN2)
V/W(R)
X-07
V/W(F)
K2-09
BONNET SWITCH
K2-09
B(F)
BATTERY (SECTION K-2a) 217
L/R(R) W/B(R) B(R)
K2-11
A C B
THEFT-DETERRENT SIREN
B(R)
B(IN2) P(IN2) R(IN2)
K2-12
B V R
K2-13
D A B
INTRUDE SENSOR
WITH SLIDING SUNROOF
R(IN2) P(IN2) B(IN2)
K2-13
B A D
INTRUDE SENSOR
WITHOUT SLIDING SUNROOF
1 2 3 15 16

K2-01 KEYLESS UNIT(R)

	2Q	2O	2M	2K	2I	2G				
2W	2U	2S					2E	2C	2A	
B	R/Y	G/R	W/G	✳	✳ #P	B/L	O	✳ #BR/W	Y	✳	L/R
✳ #R	✳	✳ #W/B	L	✳	✳	✳ #R/B	BR/Y	✳	P/B	✳ #V/W	B/Y
2X	2V	2T	2R	2P	2N	2L	2J	2H	2F	2D	2B

Y/B	L/O	✳	✳	G/B	L/W
3F	3E	3D	3C	3B	3A

K2-09 BONNET SWITCH(F)

V/W	B

K2-11 THEFT-DETERRENT SIREN(R)

W/B	B	L/R
C	B	A

K2-12 INTERIOR LIGHT No.2(IN2)-SHORT CORD No.2

(IN2)

P	✳	W/G
R	B	✳

(SHORT CORD No.2)

6	✳	V
✳	B	R

TERMINALS OF THIS CONNECTOR ARE INDICATED BY NUMBERS.

K2-13 INTRUDE SENSOR

WITHOUT SLIDING SUNROOF

(IN2)

A	C	E
P	✳	✳
R	B	✳
B	D	F

WITH SLIDING SUNROOF

(SHORT CORD)

V	R	✳	B
A	B	C	D

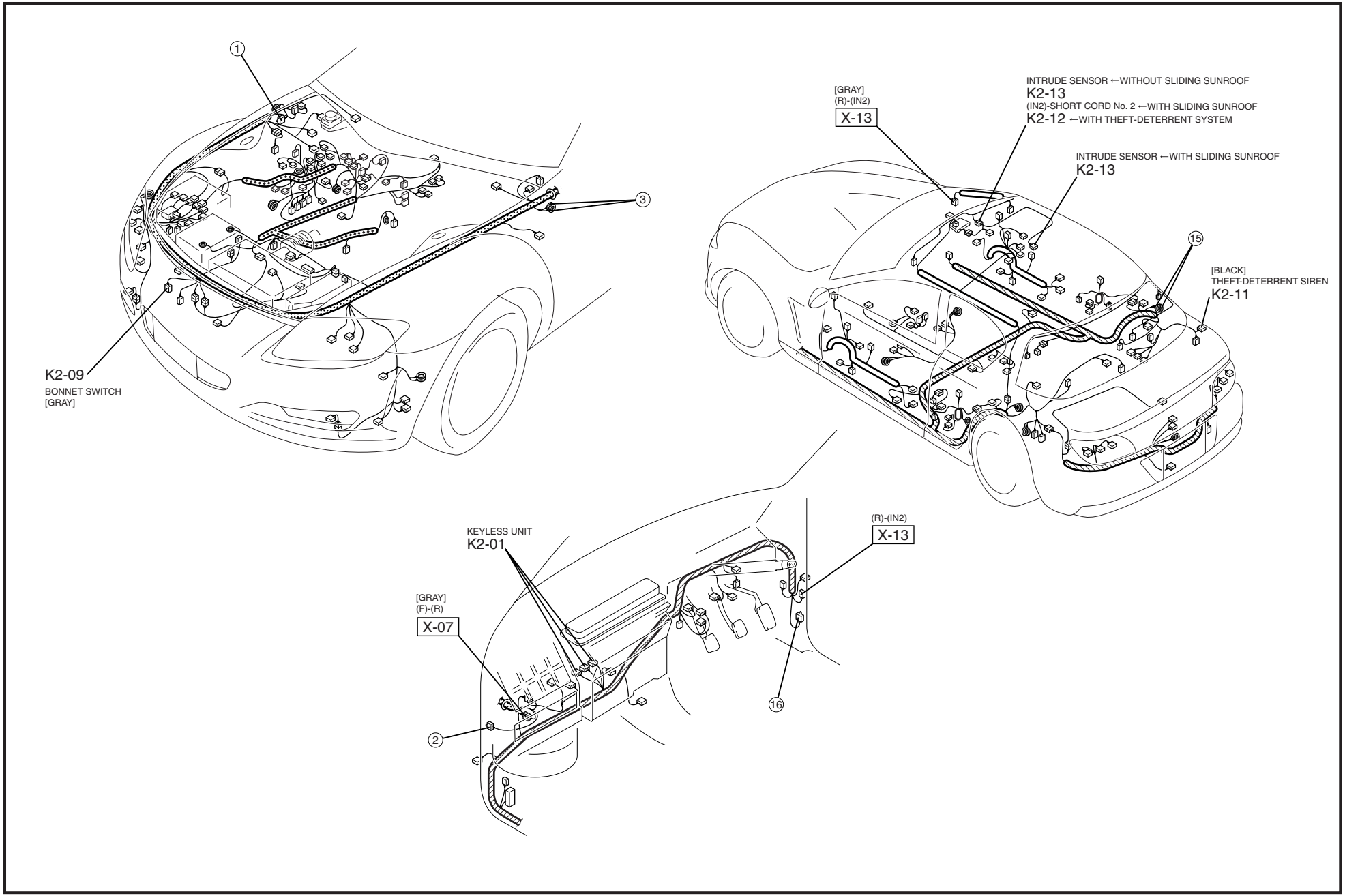
1
3
K2-09
BONNET SWITCH
[GRAY]
[GRAY]
(R)-(IN2)
X-13
INTRUDE SENSOR ←WITHOUT SLIDING SUNROOF
K2-13
(IN2)-SHORT CORD No. 2 ←WITH SLIDING SUNROOF
K2-12 ←WITH THEFT-DETERRENT SYSTEM
INTRUDE SENSOR ←WITH SLIDING SUNROOF
K2-13
15
[BLACK]
THEFT-DETERRENT SIREN
K2-11
KEYLESS UNIT
K2-01
(R)-(IN2)
X-13
[GRAY]
(F)-(R)
X-07
16
2

HEATED OUTER MIRROR / POWER OUTER MIRROR

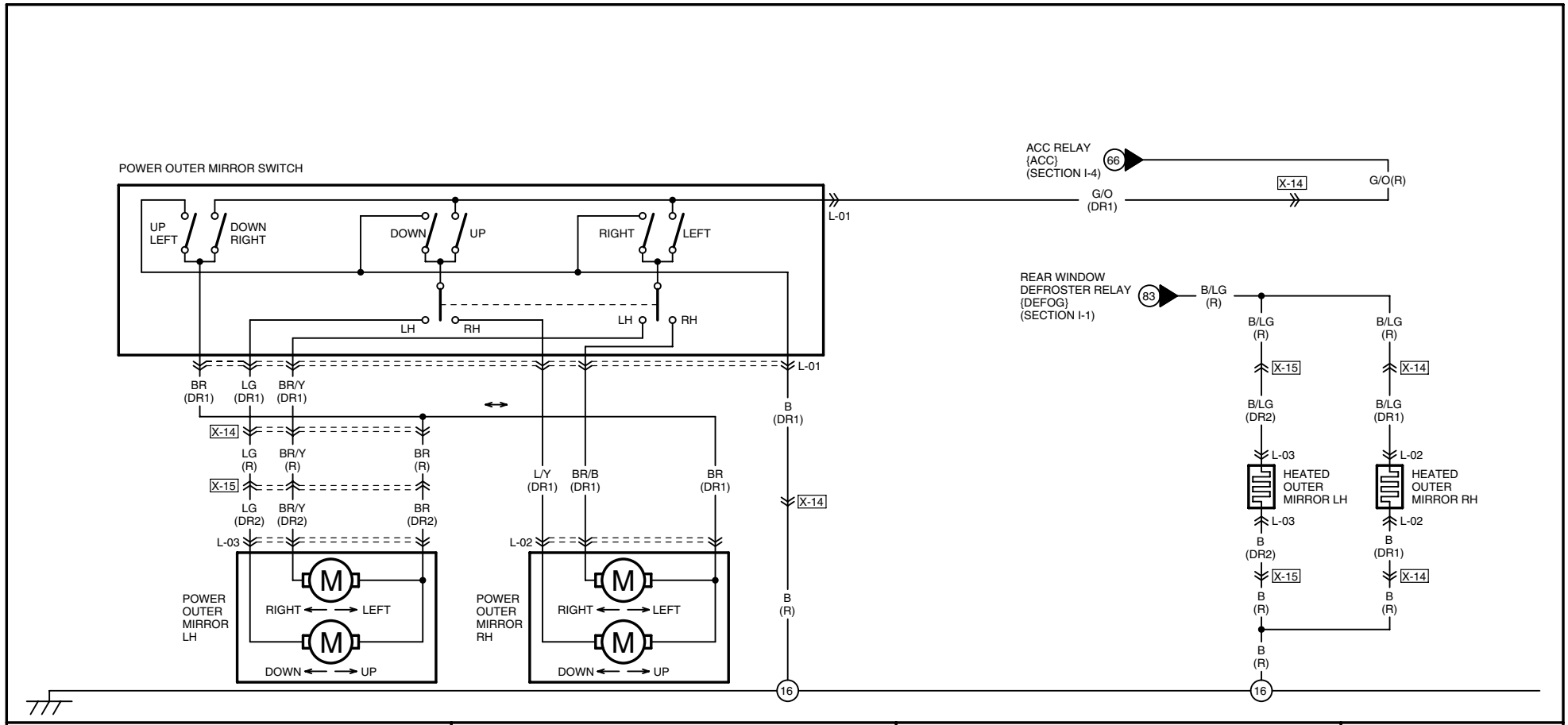

L-01 POWER OUTER MIRROR SWITCH(DR1)

✳	✳	G/O	B	BR	BR/Y	LG	L/Y	BR/B	✳

L-02 POWER OUTER MIRROR/
HEATED OUTER MIRROR RH(DR1)

B/LG	L/R	G/B	B
L/Y	BR	BR/B	✳

L-03 POWER OUTER MIRROR/
HEATED OUTER MIRROR LH(DR2)

B/LG	L/R	G/B	B
LG	BR	BR/Y	✳

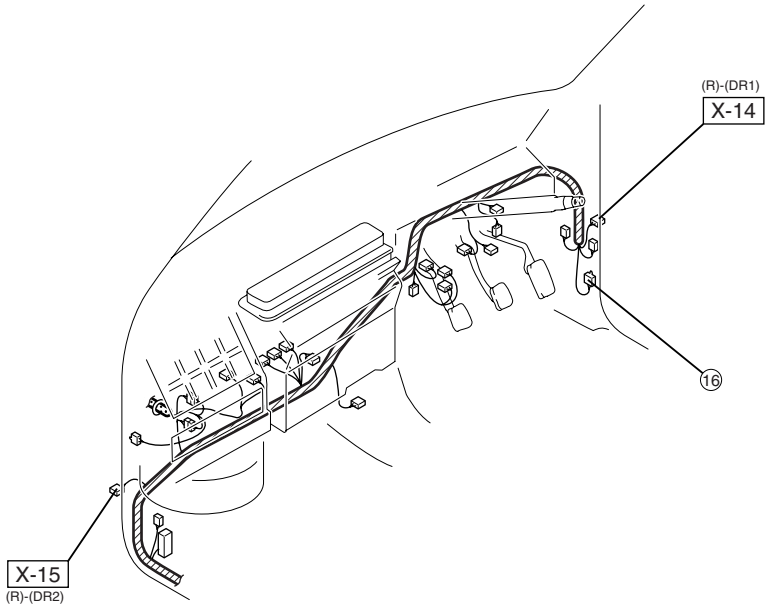
(R)-(DR1)
X-14
16
X-15
(R)-(DR2)

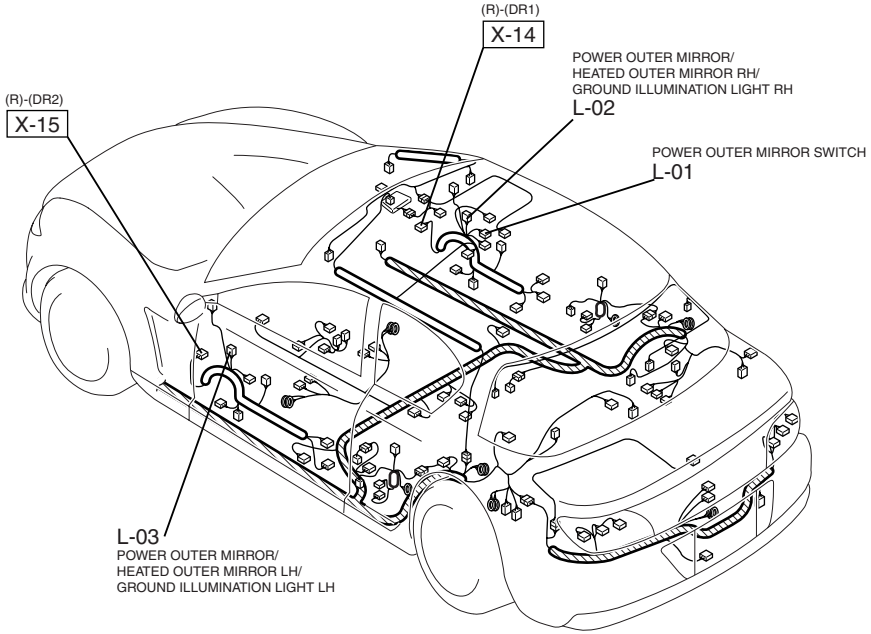
(R)-(DR1)
X-14
POWER OUTER MIRROR/
HEATED OUTER MIRROR RH/
GROUND ILLUMINATION LIGHT RH
L-02
(R)-(DR2)
X-15
POWER OUTER MIRROR SWITCH
L-01
L-03
POWER OUTER MIRROR/
HEATED OUTER MIRROR LH/
GROUND ILLUMINATION LIGHT LH

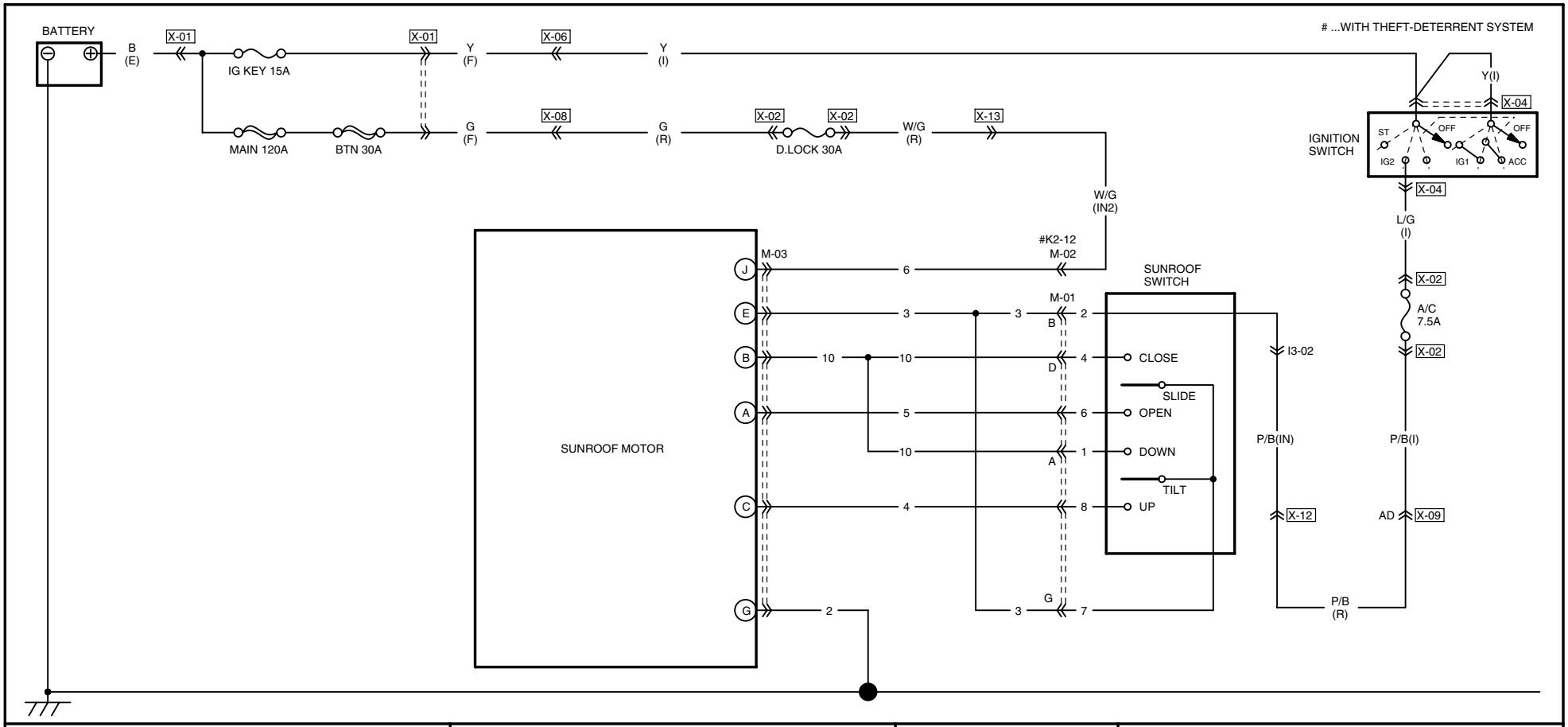

M-01 SHORT CORD No.1-SHORT CORD No.2

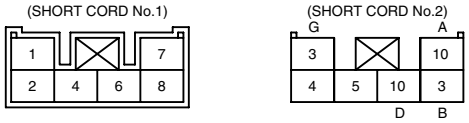

TERMINALS OF THIS CONNECTOR ARE INDICATED BY NUMBERS.

M-02 INTERIOR LIGHT No.2(IN2)-SHORT CORD No.2

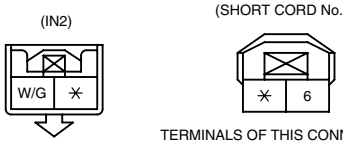

TERMINALS OF THIS CONNECTOR ARE INDICATED BY NUMBERS.

M-03 SUNROOF MOTOR (SHORT CORD No.2)

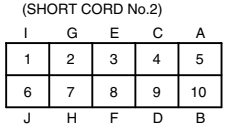

TERMINALS OF THIS CONNECTOR ARE INDICATED BY NUMBERS.

I3-02 INTERIOR LIGHT(IN)-SUNROOF SWITCH/ SHORT CORD No.1

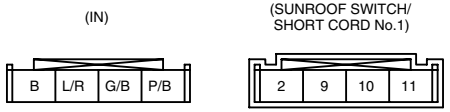

TERMINALS OF THIS CONNECTOR ARE INDICATED BY NUMBERS.

K2-12 INTERIOR LIGHT No.2(IN2)-SHORT CORD No.2

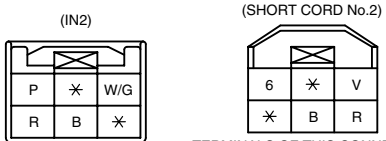

TERMINALS OF THIS CONNECTOR ARE INDICATED BY NUMBERS.

HARNESS SYMBOL: (F) (E) (R)

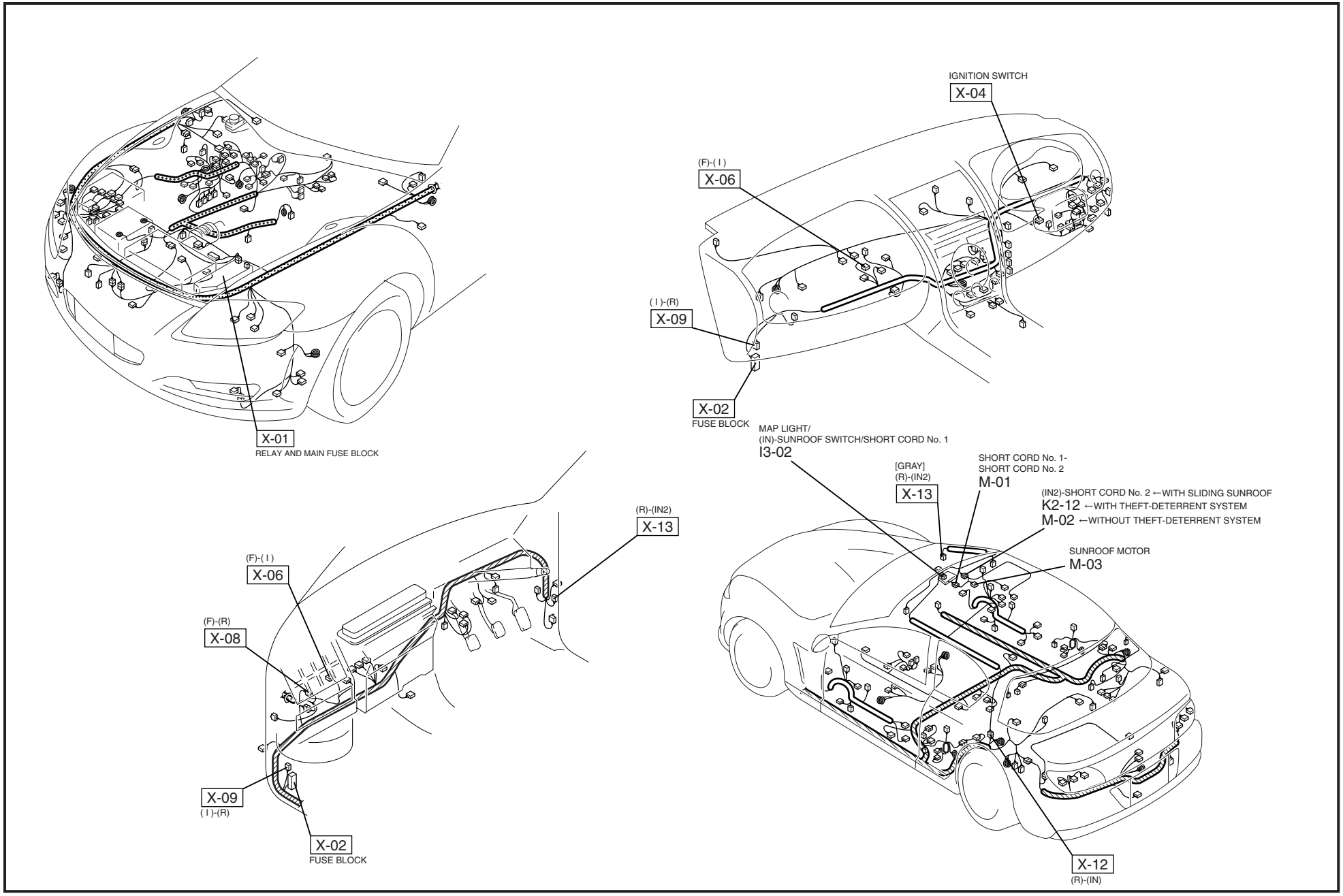

ELECTRIC POWER STEERING(EPS)SYSTEM

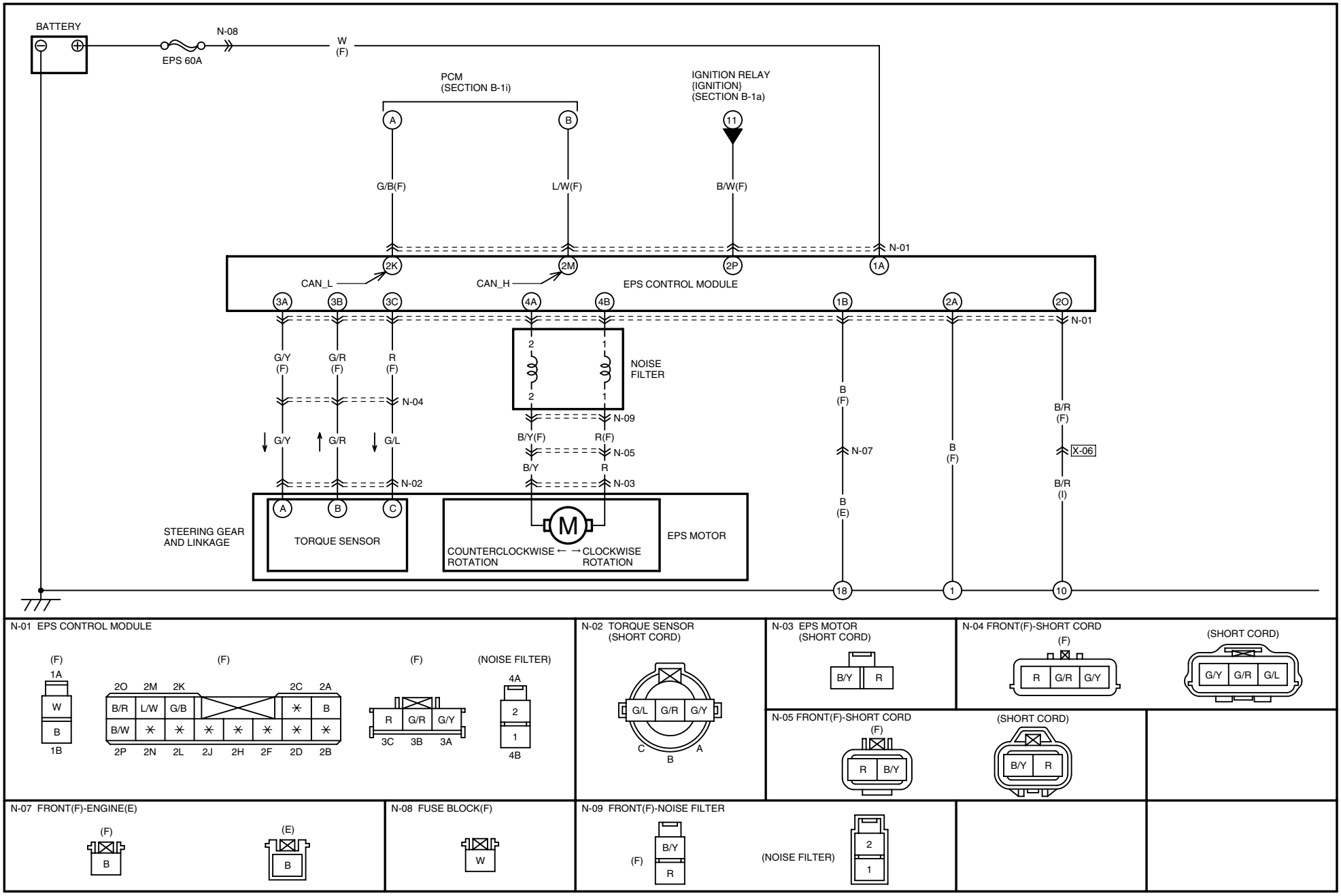

HARNESS SYMBOL: (F) (E) (R)

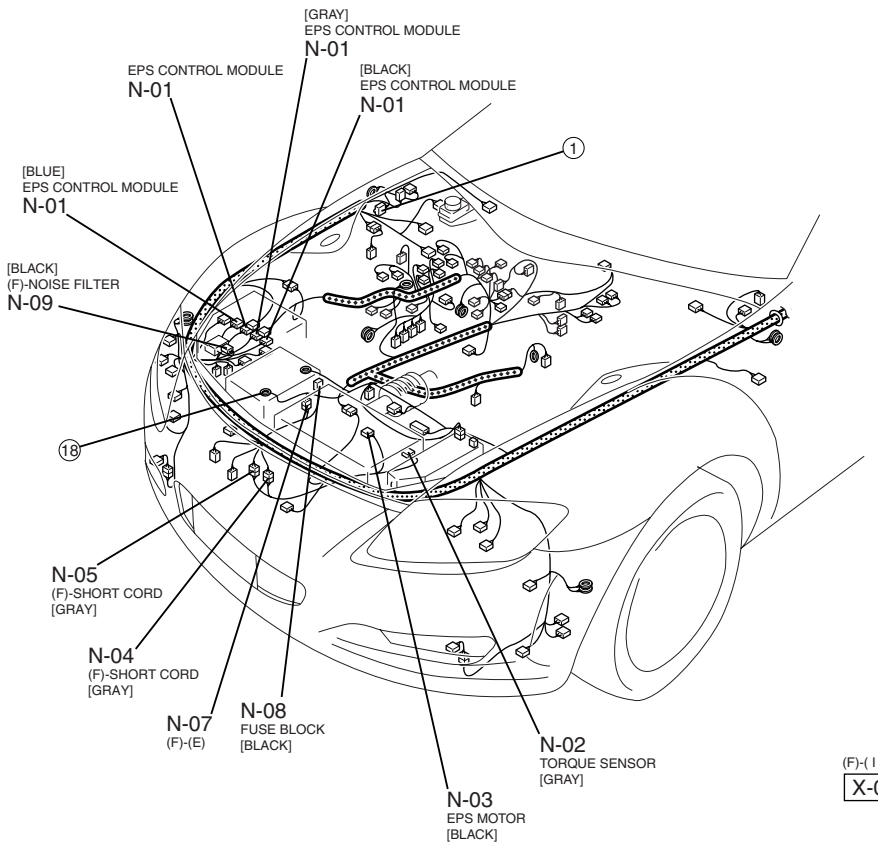

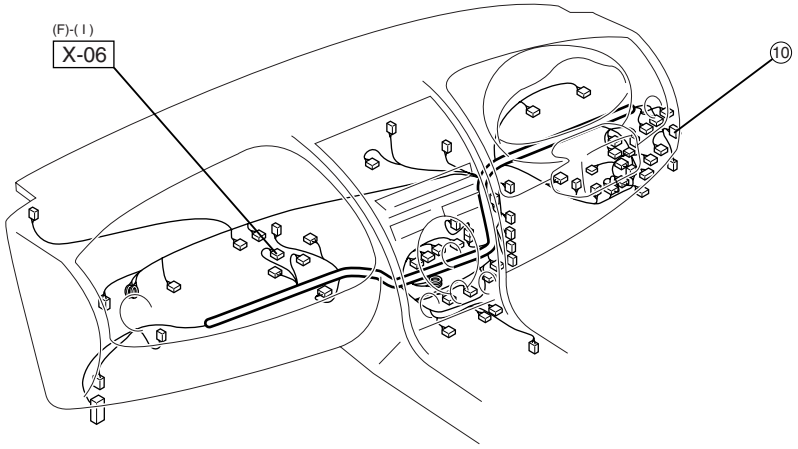

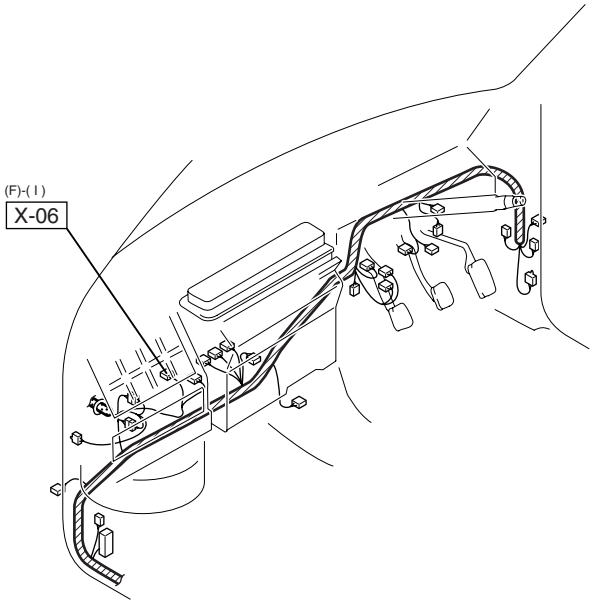

DYNAMIC STABILITY CONTROL(DSC)SYSTEM

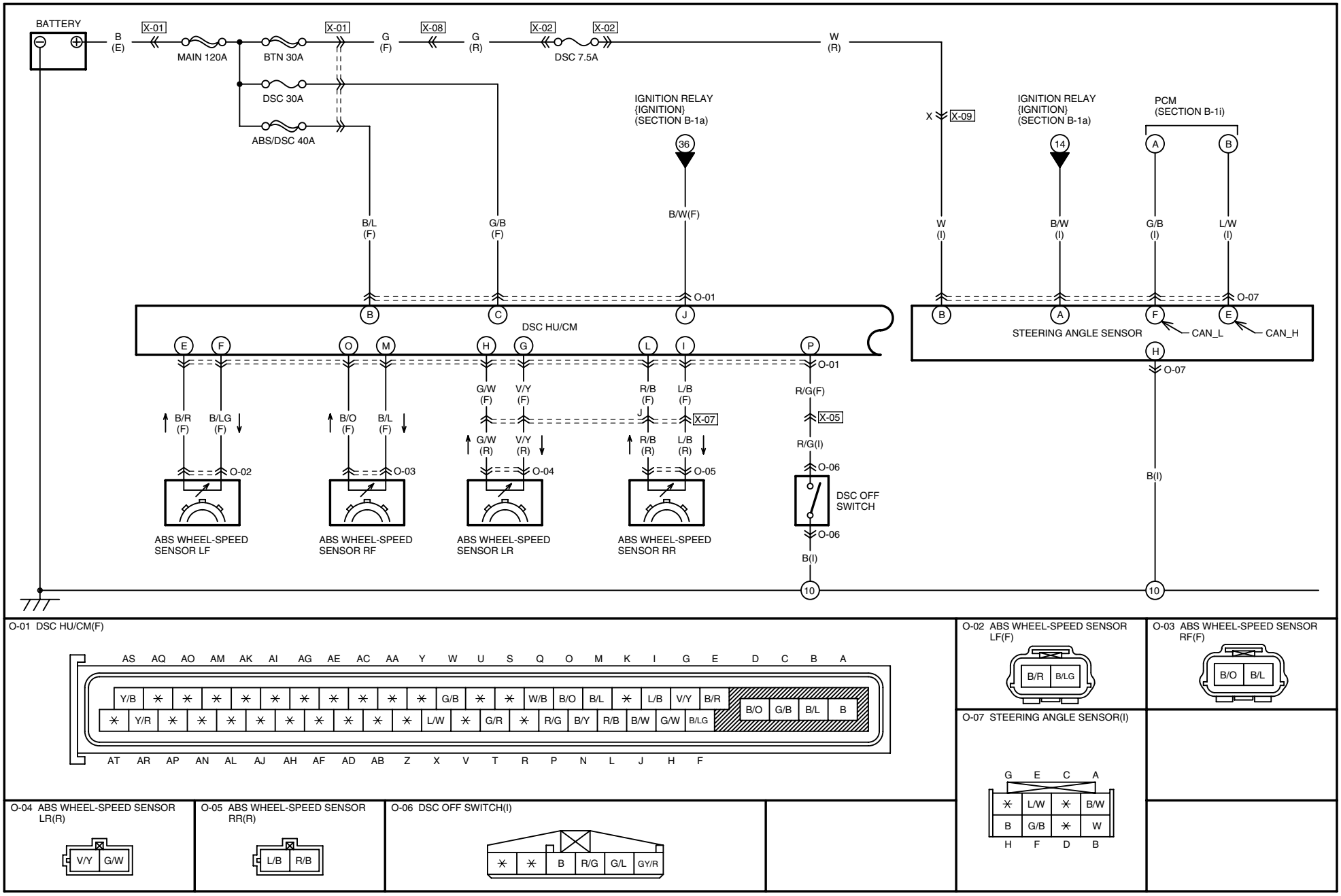

HARNESS SYMBOL: (F) (E) (R)

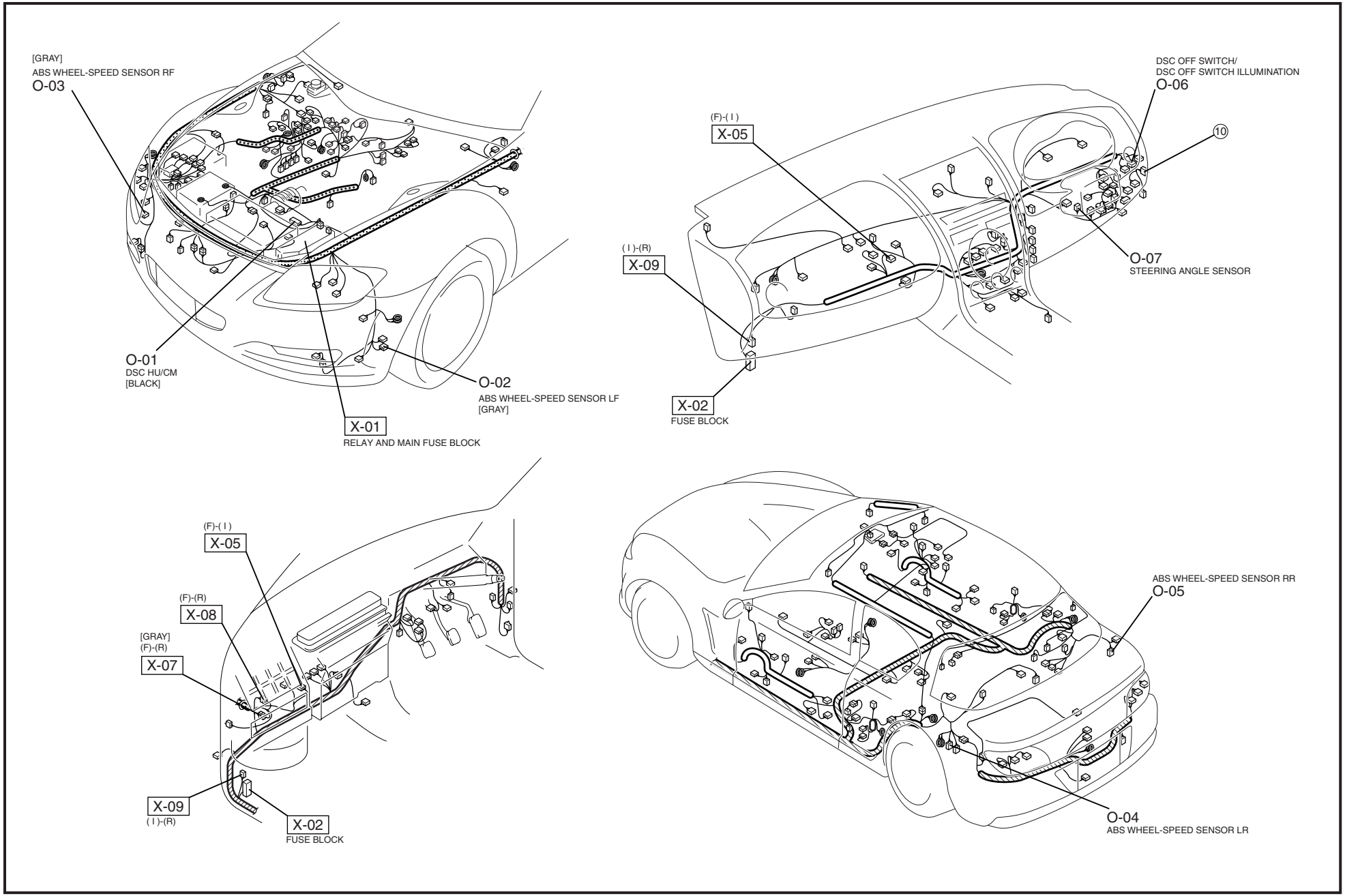

DYNAMIC STABILITY CONTROL(DSC)SYSTEM

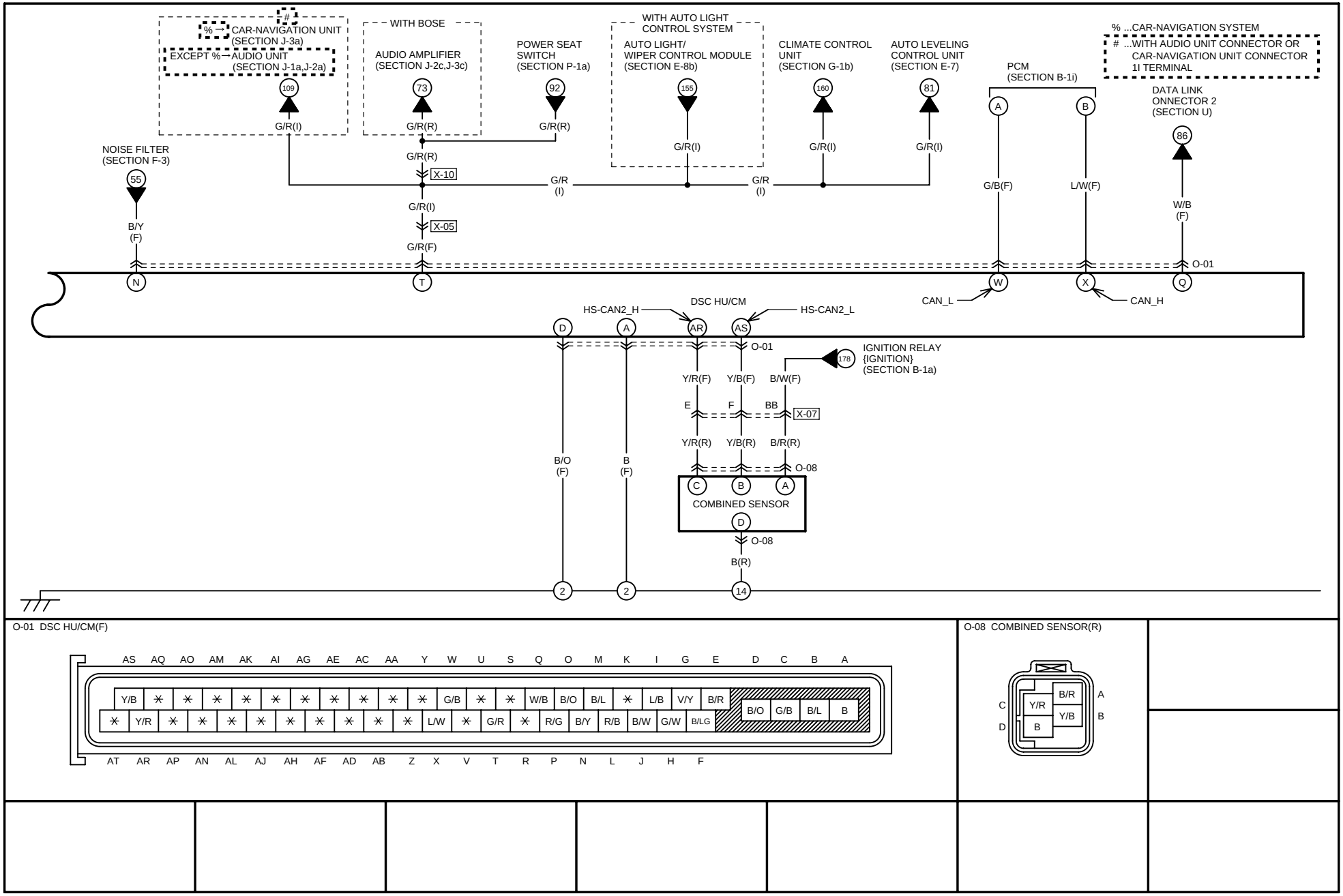

HARNESS SYMBOL: (F) (E) (R)

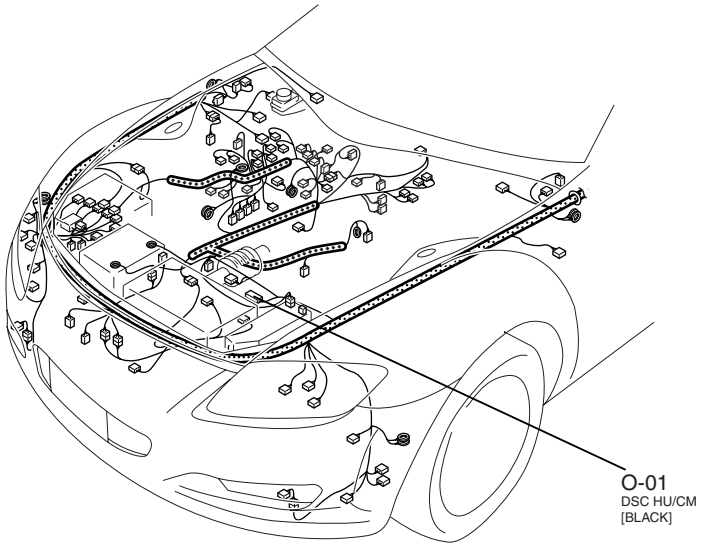

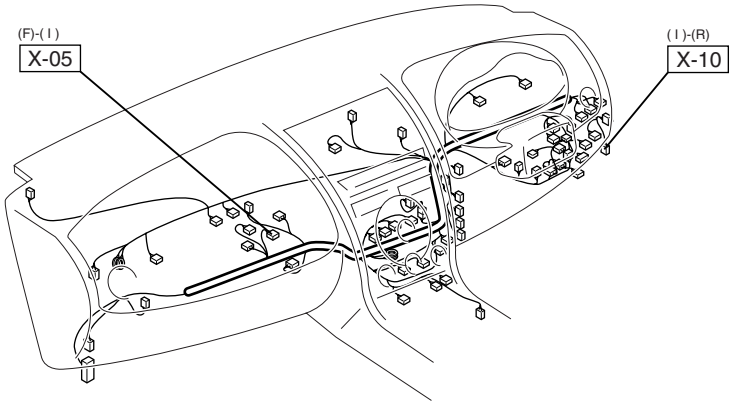

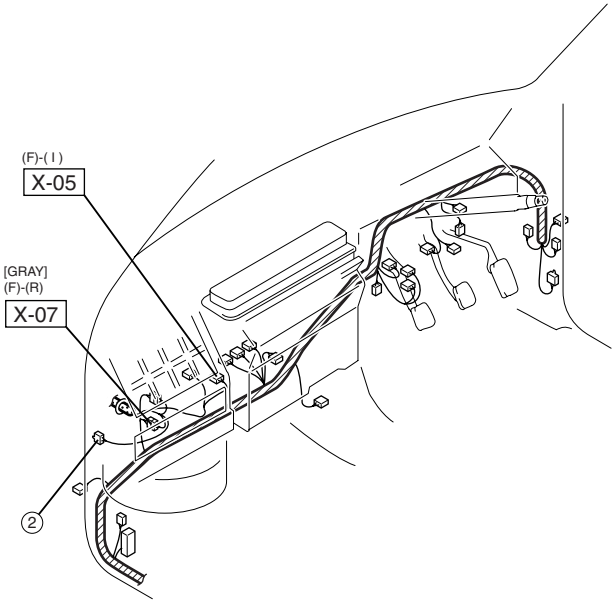

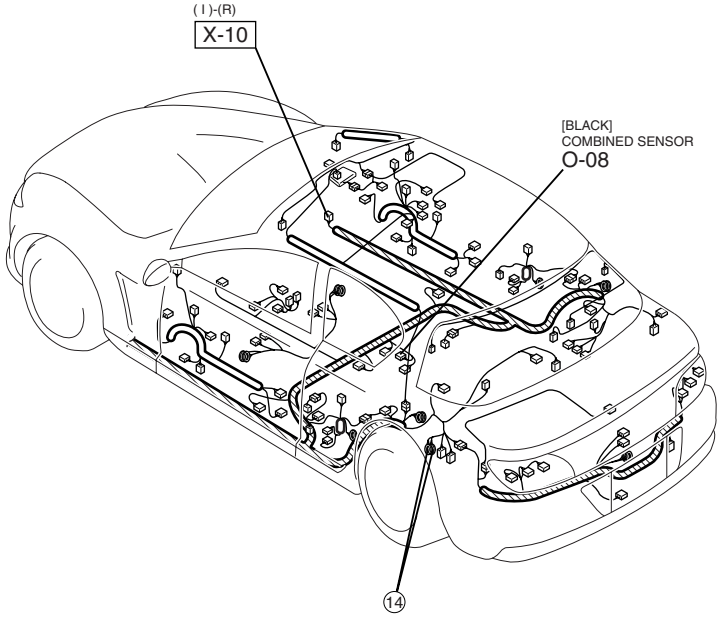

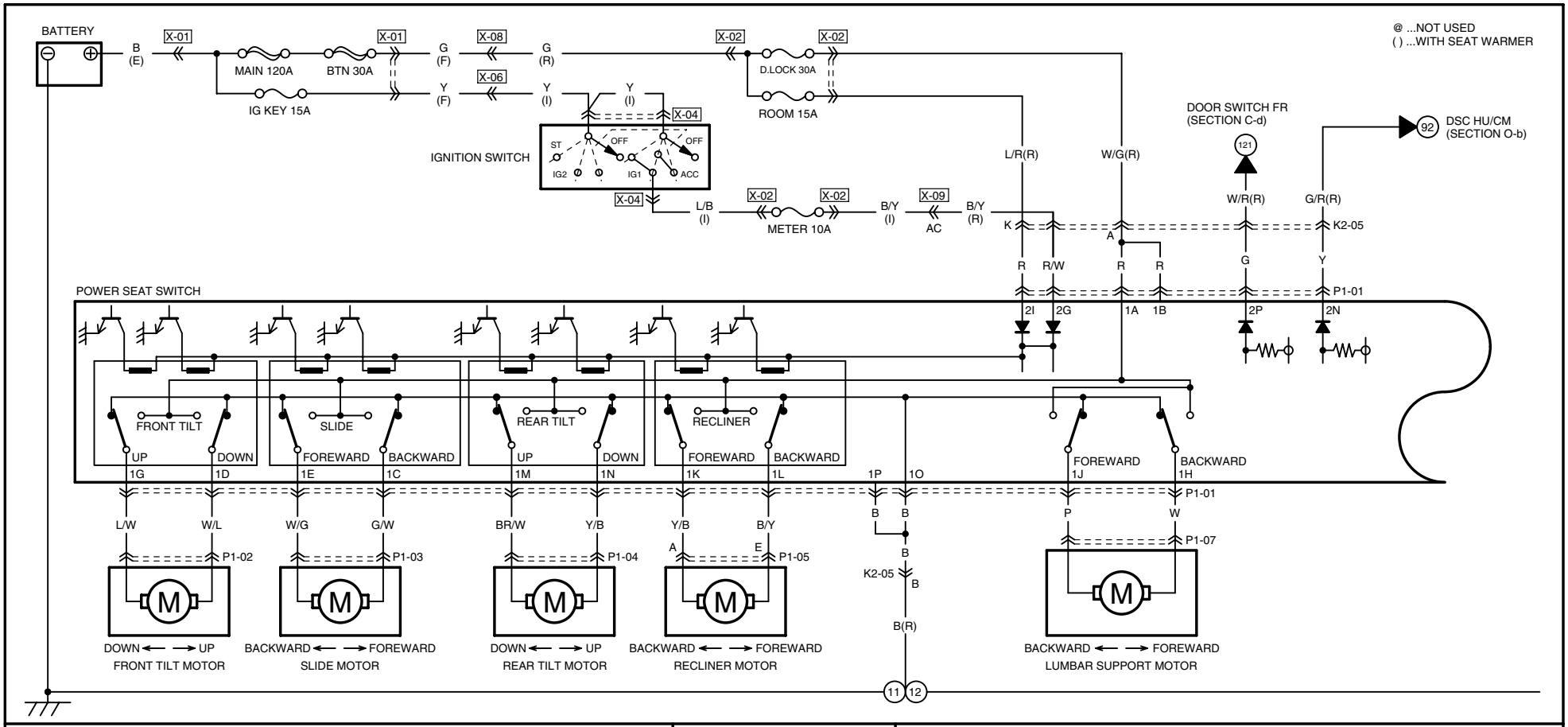

P1-01 POWER SEAT SWITCH(SHORT CORD)

1O	1M	1K	1I	1G	1E	1C	1A
B	BR/W	Y/B	✳	L/W	W/G	G/W	R
B	Y/B	B/Y	P	W	✳	W/L	R
1P	1N	1L	1J	1H	1F	1D	1B

2O	2M	2K	2I	2G	2E	2C	2A
✳	L/W	B	R	R/W	✳	BR/Y	BR
G	Y	B/W	G	B/Y	@W	G/Y	P
2P	2N	2L	2J	2H	2F	2D	2B

P1-02 FRONT TILT MOTOR (SHORT CORD)

P			✳
B/Y	G	L/W	W/L

P1-03 SLIDE MOTOR (SHORT CORD)

G/Y			✳
B/Y	G	W/G	G/W

K2-05 REAR(R)-SHORT CORD

(R)

G/R	L/R	✳	GY	R/Y	B/Y	W/G
W/R	B/R	✳	B	V	✳ (R)	B

H B

(SHORT CORD)

A K

R	R/W	O	W/R	✳	R	Y
B	G/R	W	B/R	✳	B	G

B L

P1-04 REAR TILT MOTOR(SHORT CORD)

BR/Y			✳
B/Y	G	BR/W	Y/B

P1-05 RECLINER MOTOR(SHORT CORD)

E	D	C	B	A
B/Y	BR	✳	G	Y/B

P1-07 LUMBAR SUPPORT MOTOR (SHORT CORD)

P	W

HARNESS SYMBOL: (F) (E) (R)

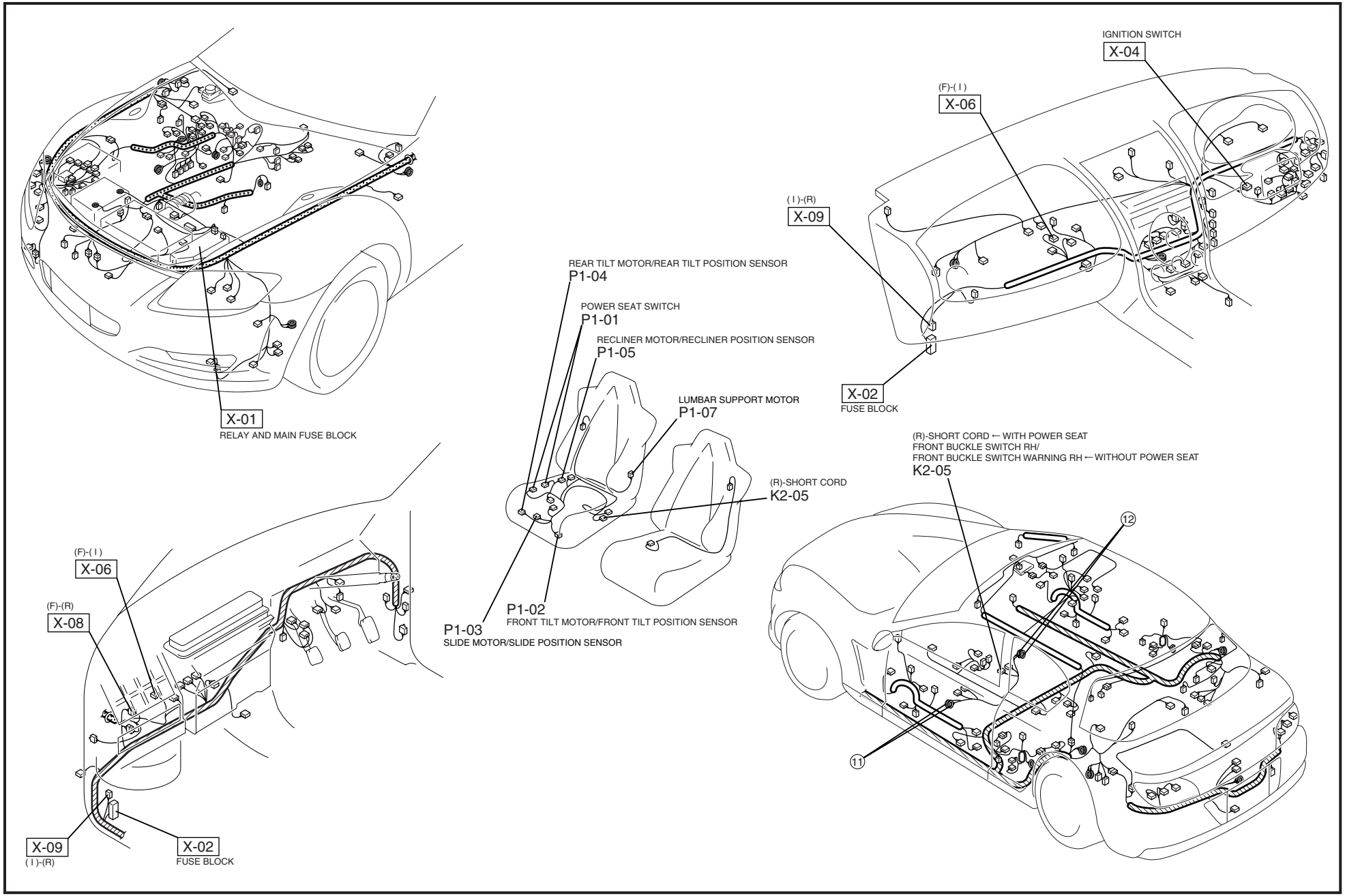

@ ...NOT USED
( ) ...WITH SEAT WARMER

POWER SEAT SWITCH

2H 2A 2C 2B 2D 2J 2M 2L 2K

P1-01

B/Y

B/Y

G

G

G

L/W B/W

BR G P1-05

B/Y BR/Y G P1-04

B/Y P G P1-02

B/Y G/Y G P1-03

P1-08

B

L K2-05

B/R(R)

D B

RECLINER POSITION SENSOR

REAR TILT POSITION SENSOR

FRONT TILT POSITION SENSOR

SLIDE POSITION SENSOR

WALK IN SWITCH

11 12

P1-01 POWER SEAT SWITCH(SHORT CORD)

2O	2M	2K	2I	2G	2E	2C	2A
✳	L/W	B	R	R/W	✳	BR/Y	BR
G	Y	B/W	G	B/Y	@W	G/Y	P
2P	2N	2L	2J	2H	2F	2D	2B

P1-02 FRONT TILT POSITION SENSOR(SHORT CORD)

P			✳
B/Y	G	L/W	W/L

P1-03 SLIDE POSITION SENSOR(SHORT CORD)

G/Y			✳
B/Y	G	W/G	G/W

K2-05 REAR(R)-SHORT CORD

(R)

G/R	L/R	✳	GY	R/Y	B/Y	W/G
W/R	B/R	✳	B	V	✳ (R)	B

H B

(SHORT CORD)

A K

R	R/W	O	W/R	✳	R	Y
B	G/R	W	B/R	✳	B	G

B L

P1-04 REAR TILT POSITION SENSOR(SHORT CORD)

BR/Y			✳
B/Y	G	BR/W	Y/B

P1-05 RECLINER POSITION SENSOR(SHORT CORD)

E	D	C	B	A
B/Y	BR	✳	G	Y/B

P1-08 WALK IN SWITCH (SHORT CORD)

B/W	L/W

HARNESS SYMBOL: (F) (E) (R)

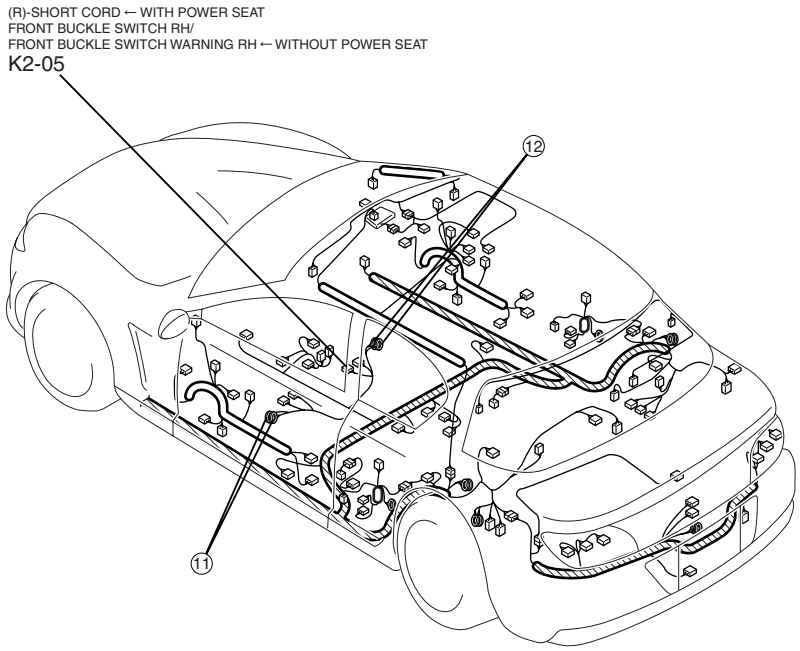

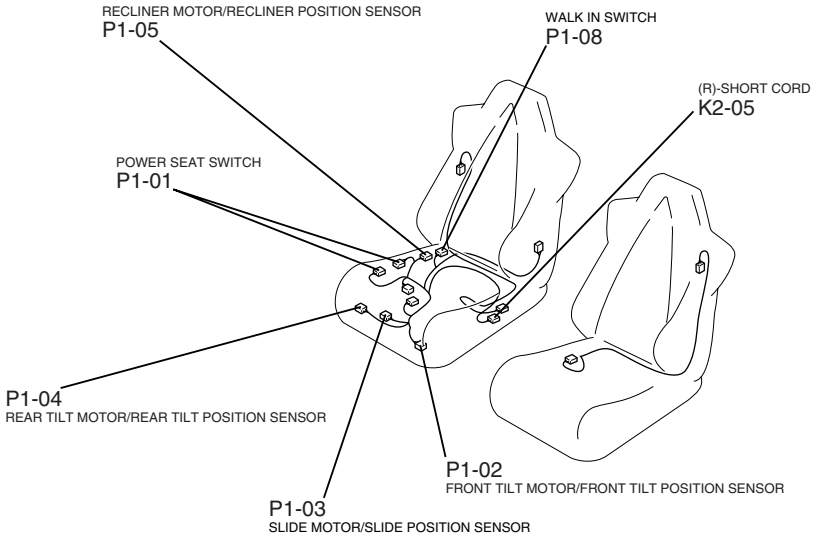

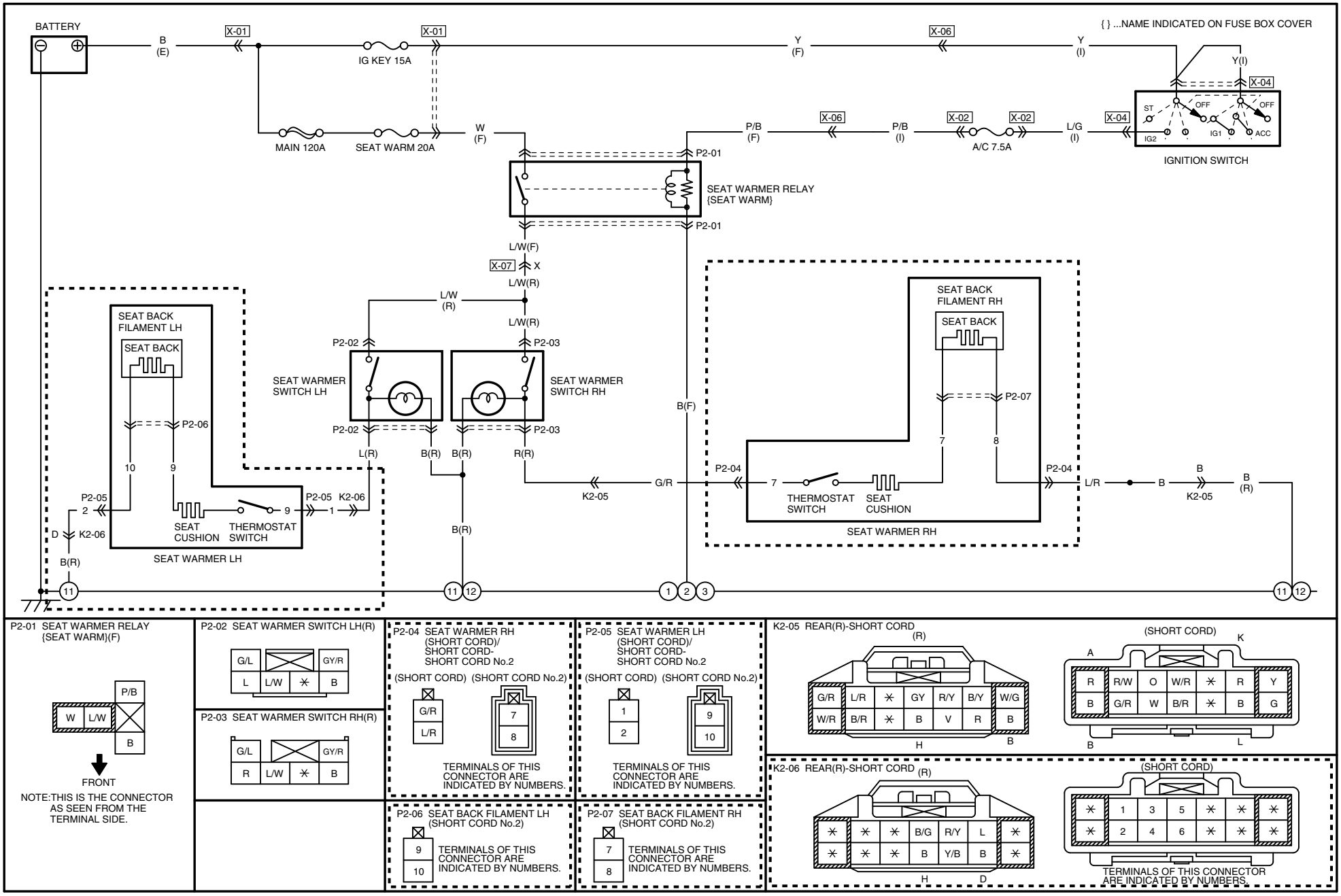

P2-01 SEAT WARMER RELAY {SEAT WARM}(F)

NOTE:THIS IS THE CONNECTOR AS SEEN FROM THE TERMINAL SIDE.

P2-02 SEAT WARMER SWITCH LH(R)

P2-03 SEAT WARMER SWITCH RH(R)

P2-04 SEAT WARMER RH (SHORT CORD)/ SHORT CORD- SHORT CORD No.2

(SHORT CORD) (SHORT CORD No.2)

TERMINALS OF THIS CONNECTOR ARE INDICATED BY NUMBERS.

P2-05 SEAT WARMER LH (SHORT CORD)/ SHORT CORD- SHORT CORD No.2

(SHORT CORD) (SHORT CORD No.2)

TERMINALS OF THIS CONNECTOR ARE INDICATED BY NUMBERS.

K2-05 REAR(R)-SHORT CORD

(R) (SHORT CORD)

K2-06 REAR(R)-SHORT CORD (R) (SHORT CORD)

TERMINALS OF THIS CONNECTOR ARE INDICATED BY NUMBERS.

P2-06 SEAT BACK FILAMENT LH (SHORT CORD No.2)

TERMINALS OF THIS CONNECTOR ARE INDICATED BY NUMBERS.

P2-07 SEAT BACK FILAMENT RH (SHORT CORD No.2)

TERMINALS OF THIS CONNECTOR ARE INDICATED BY NUMBERS.

HARNESS SYMBOL: (F) (E) (R)

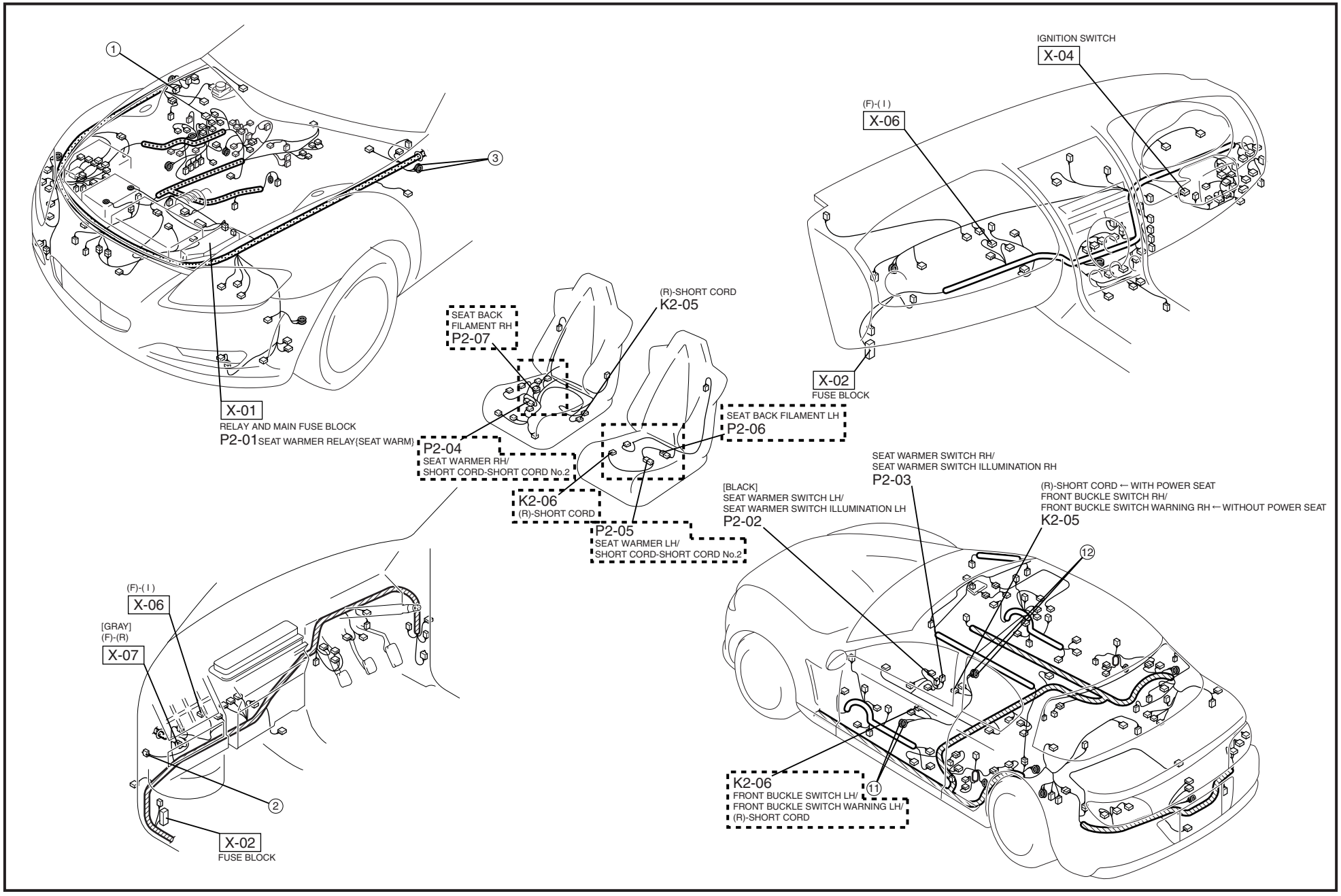

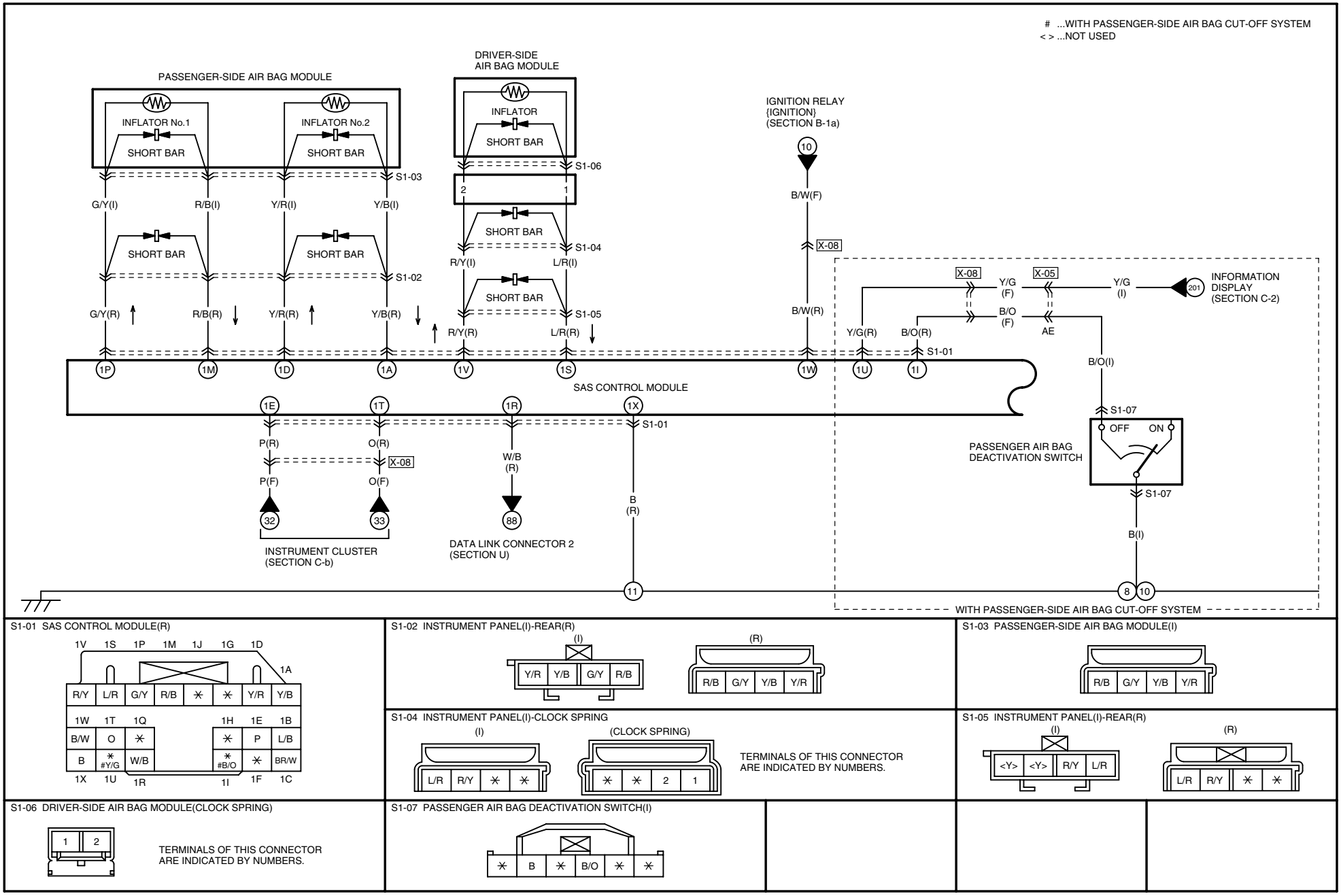
...WITH PASSENGER-SIDE AIR BAG CUT-OFF SYSTEM
< > ...NOT USED
PASSENGER-SIDE AIR BAG MODULE
INFLATOR No.1
INFLATOR No.2
SHORT BAR
DRIVER-SIDE AIR BAG MODULE
INFLATOR
IGNITION RELAY {IGNITION} (SECTION B-1a)
S1-03
S1-06
S1-04
S1-02
S1-05
S1-01
S1-07
G/Y(I)
R/B(I)
Y/R(I)
Y/B(I)
G/Y(R)
R/B(R)
Y/R(R)
Y/B(R)
R/Y(I)
L/R(I)
R/Y(R)
L/R(R)
B/W(F)
B/W(R)
X-08
X-05
Y/G (F)
Y/G (I)
B/O (F)
AE
INFORMATION DISPLAY (SECTION C-2)
Y/G(R)
B/O(R)
B/O(I)
SAS CONTROL MODULE
P(R)
O(R)
P(F)
O(F)
W/B (R)
B (R)
B(I)
INSTRUMENT CLUSTER (SECTION C-b)
DATA LINK CONNECTOR 2 (SECTION U)
PASSENGER AIR BAG DEACTIVATION SWITCH
OFF
ON
WITH PASSENGER-SIDE AIR BAG CUT-OFF SYSTEM
S1-01 SAS CONTROL MODULE(R)
S1-02 INSTRUMENT PANEL(I)-REAR(R)
S1-03 PASSENGER-SIDE AIR BAG MODULE(I)
S1-04 INSTRUMENT PANEL(I)-CLOCK SPRING
(CLOCK SPRING)
TERMINALS OF THIS CONNECTOR ARE INDICATED BY NUMBERS.
S1-05 INSTRUMENT PANEL(I)-REAR(R)
S1-06 DRIVER-SIDE AIR BAG MODULE(CLOCK SPRING)
TERMINALS OF THIS CONNECTOR ARE INDICATED BY NUMBERS.
S1-07 PASSENGER AIR BAG DEACTIVATION SWITCH(I)

HARNESS SYMBOL: (F) (E) (R)

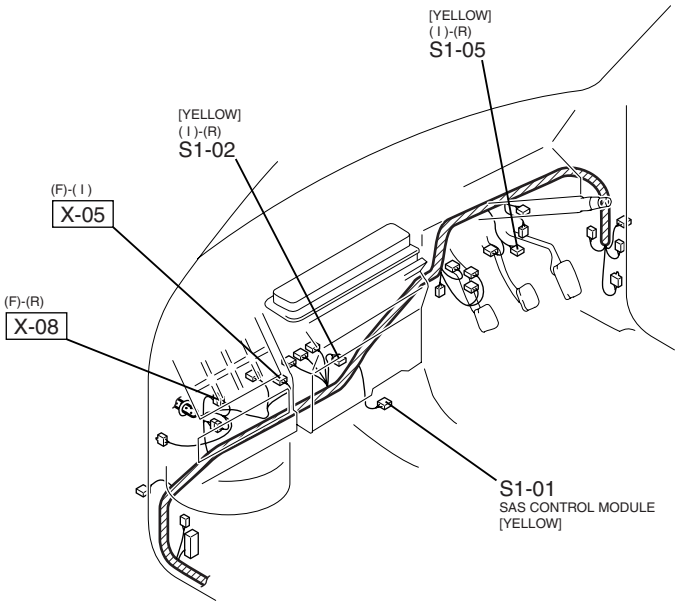

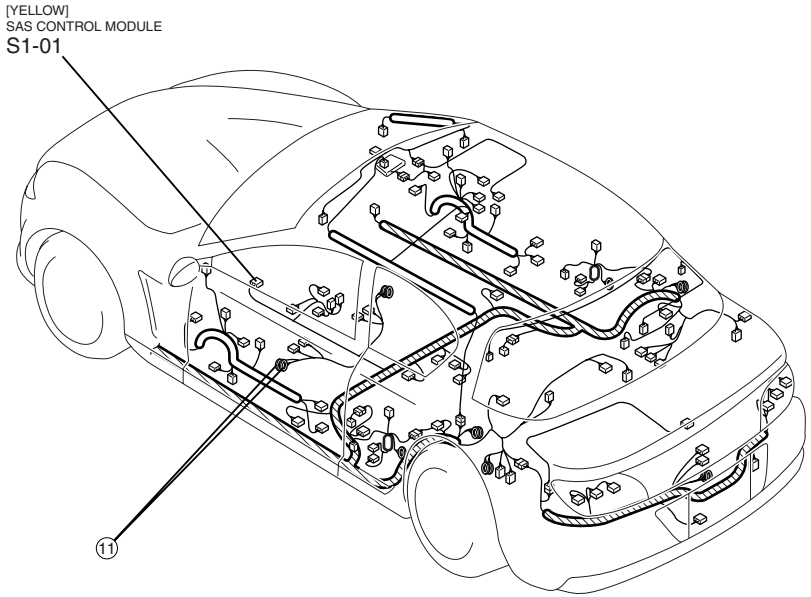

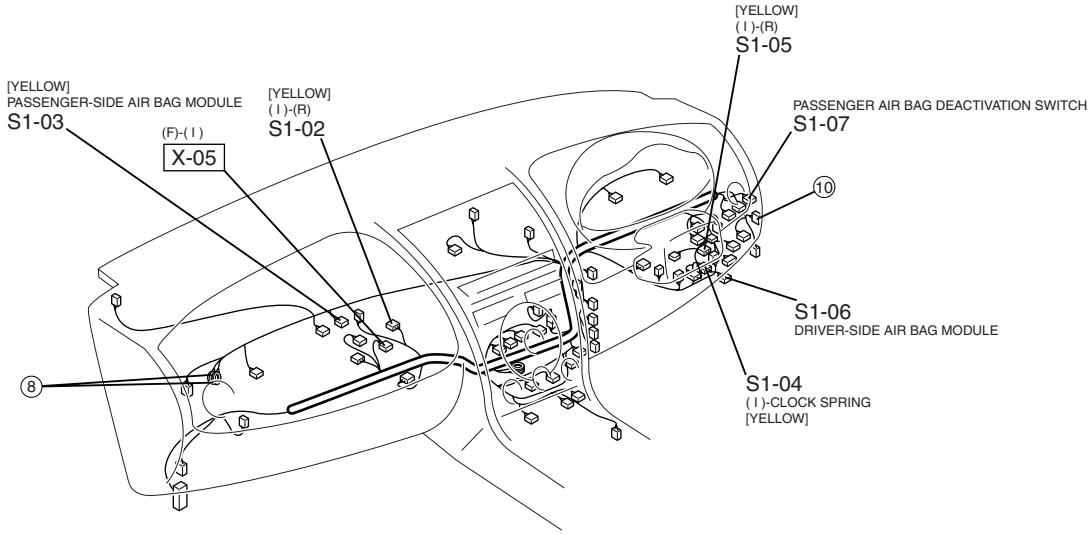

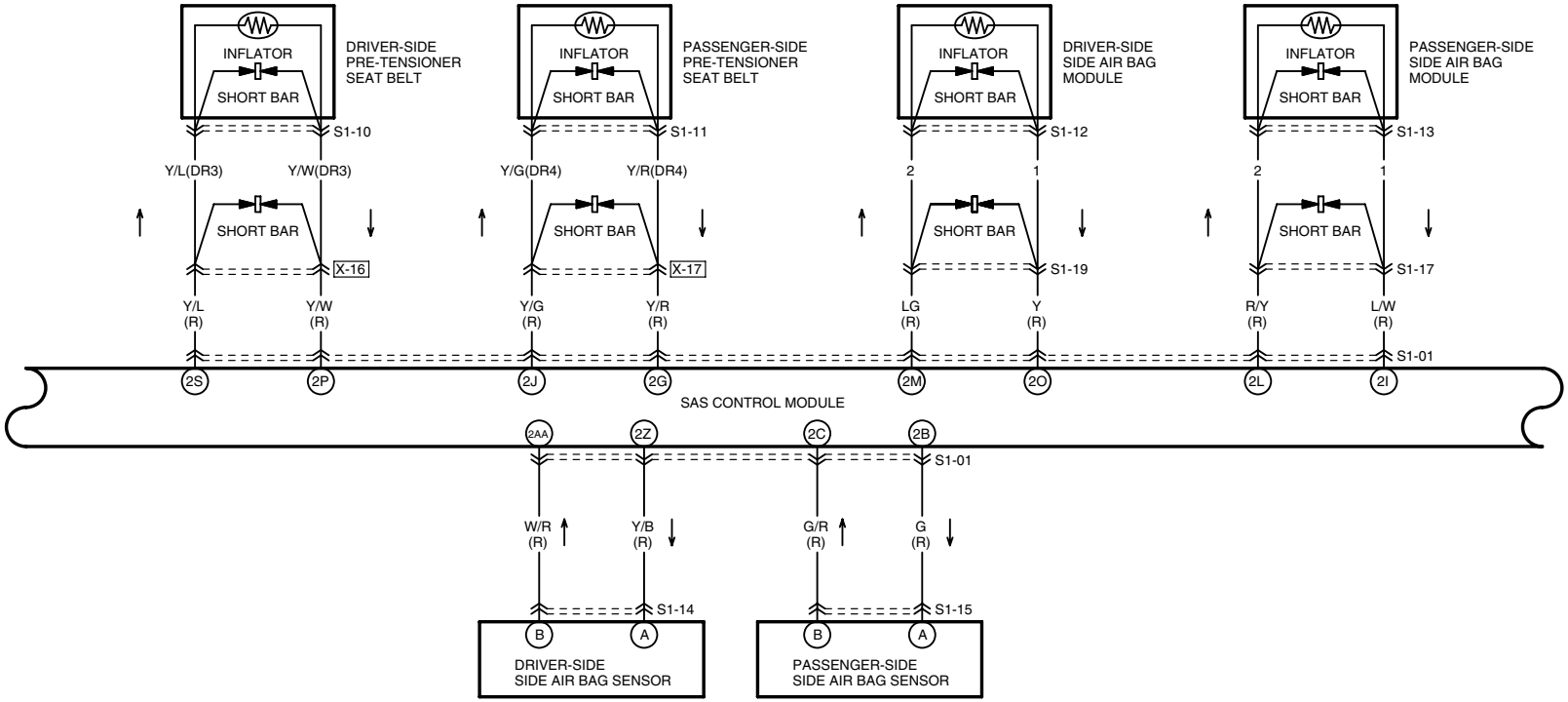

S1-01 SAS CONTROL MODULE(R)

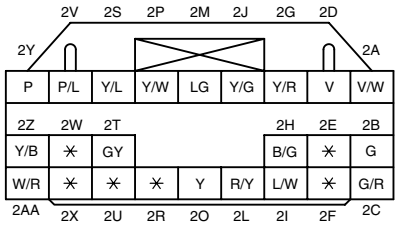

S1-10 DRIVER-SIDE PRE-TENSIONER SEAT BELT(DR3)

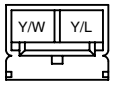

S1-11 PASSENGER-SIDE PRE-TENSIONER SEAT BELT(DR4)

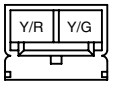

S1-12 DRIVER-SIDE SIDE AIR BAG MODULE(R)

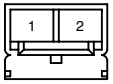

TERMINALS OF THIS CONNECTOR ARE INDICATED BY NUMBERS.

S1-13 PASSENGER-SIDE SIDE AIR BAG MODULE(R)

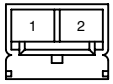

TERMINALS OF THIS CONNECTOR ARE INDICATED BY NUMBERS.

S1-14 DRIVER-SIDE SIDE AIR BAG SENSOR(R)

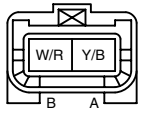

S1-15 PASSENGER-SIDE SIDE AIR BAG SENSOR(R)

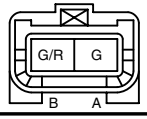

S1-19 REAR(R)-SHORT CORD

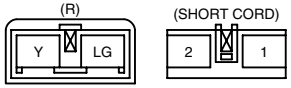

TERMINALS OF THIS CONNECTOR ARE INDICATED BY NUMBERS.

S1-17 REAR(R)-SHORT CORD

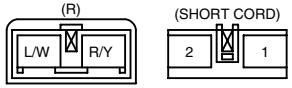

TERMINALS OF THIS CONNECTOR ARE INDICATED BY NUMBERS.

HARNESS SYMBOL: (F) (E) (R)

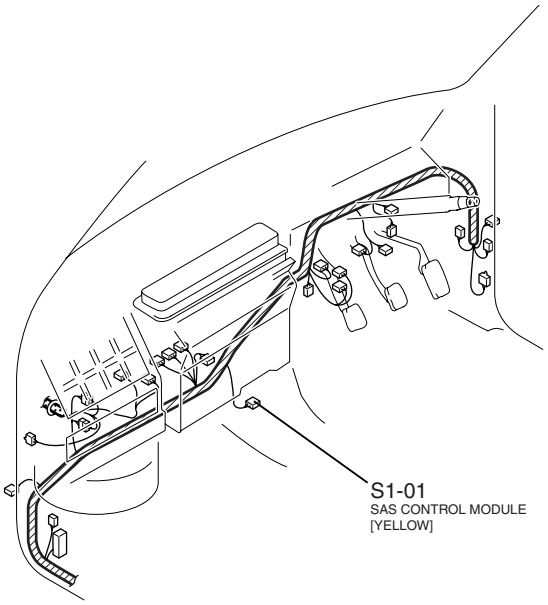

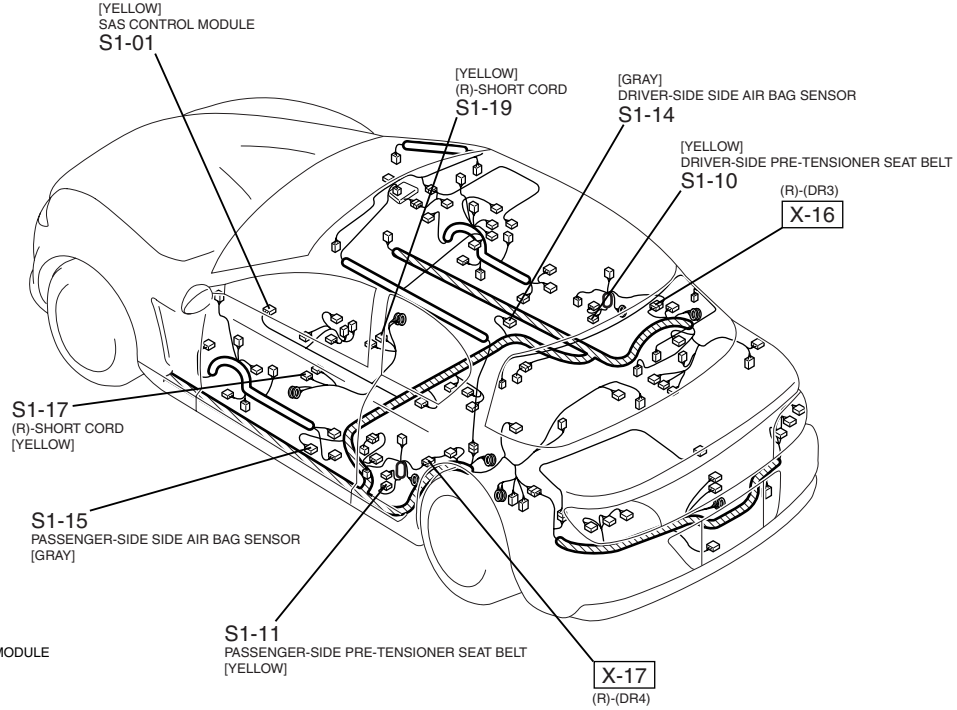

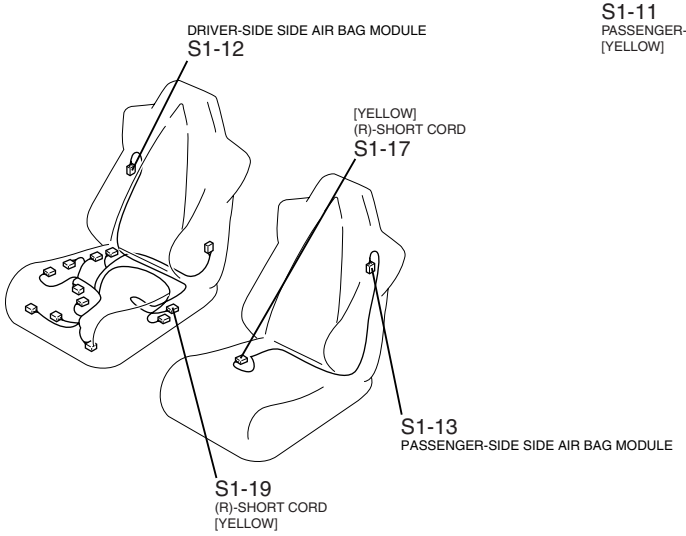

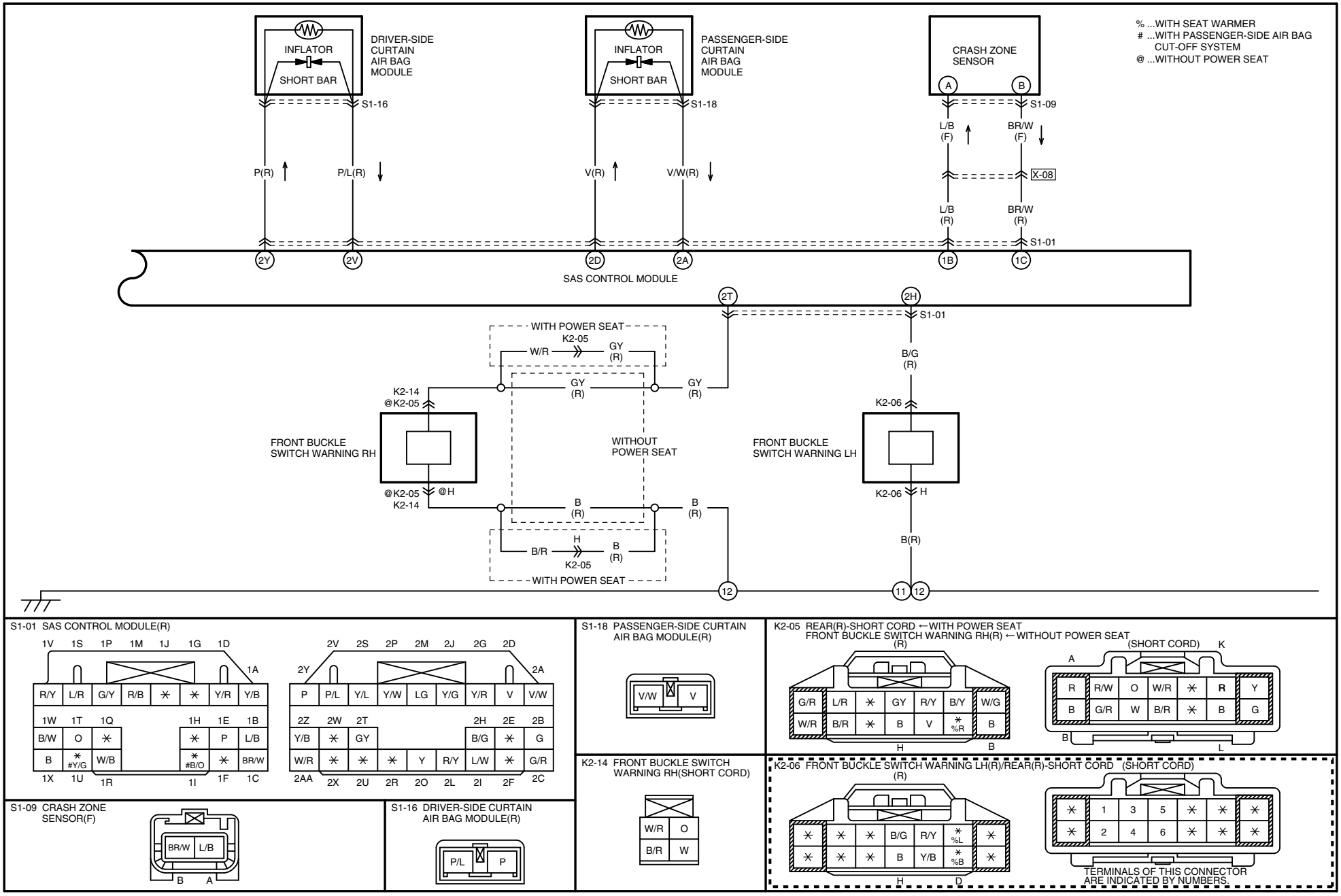
% ...WITH SEAT WARMER
# ...WITH PASSENGER-SIDE AIR BAG CUT-OFF SYSTEM
@ ...WITHOUT POWER SEAT
INFLATOR
SHORT BAR
DRIVER-SIDE CURTAIN AIR BAG MODULE
PASSENGER-SIDE CURTAIN AIR BAG MODULE
CRASH ZONE SENSOR
S1-16
S1-18
S1-09
S1-01
X-08
P(R)
P/L(R)
V(R)
V/W(R)
L/B (F)
BR/W (F)
L/B (R)
BR/W (R)
SAS CONTROL MODULE
WITH POWER SEAT
K2-05
W/R
GY (R)
K2-14 @K2-05
FRONT BUCKLE SWITCH WARNING RH
WITHOUT POWER SEAT
FRONT BUCKLE SWITCH WARNING LH
B/G (R)
K2-06
@K2-05 K2-14
@H
B (R)
B/R
H
B(R)
S1-01 SAS CONTROL MODULE(R)
S1-18 PASSENGER-SIDE CURTAIN AIR BAG MODULE(R)
K2-05 REAR(R)-SHORT CORD ←WITH POWER SEAT
FRONT BUCKLE SWITCH WARNING RH(R) ←WITHOUT POWER SEAT
(SHORT CORD)
K2-14 FRONT BUCKLE SWITCH WARNING RH(SHORT CORD)
K2-06 FRONT BUCKLE SWITCH WARNING LH(R)/REAR(R)-SHORT CORD (SHORT CORD)
TERMINALS OF THIS CONNECTOR ARE INDICATED BY NUMBERS.
S1-09 CRASH ZONE SENSOR(F)
S1-16 DRIVER-SIDE CURTAIN AIR BAG MODULE(R)

HARNESS SYMBOL: (F) (E) (R)

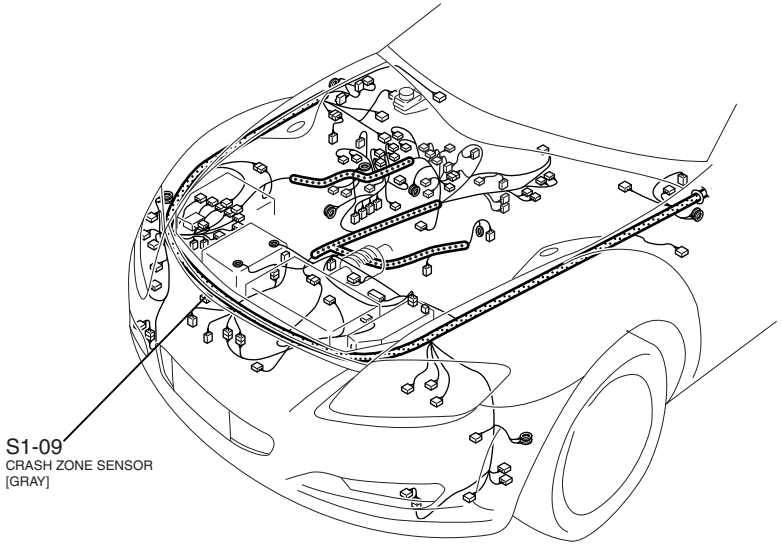

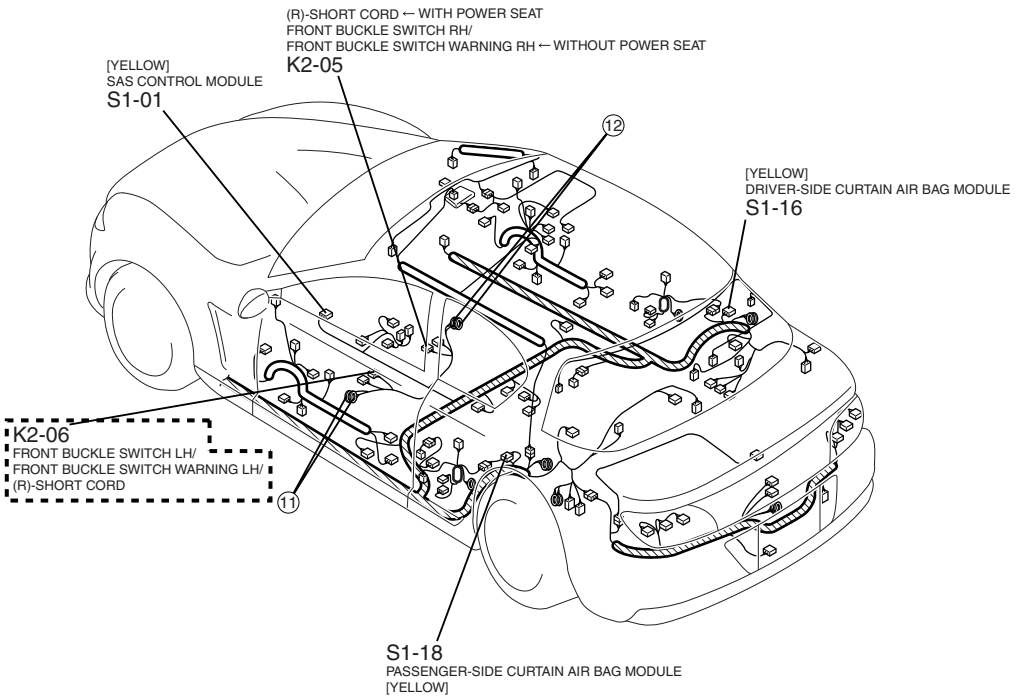

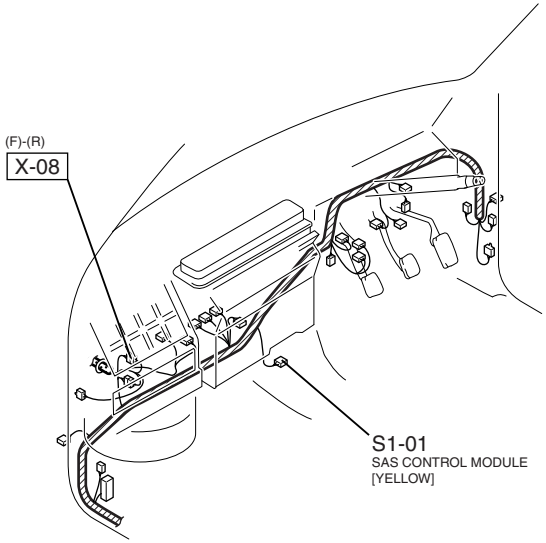

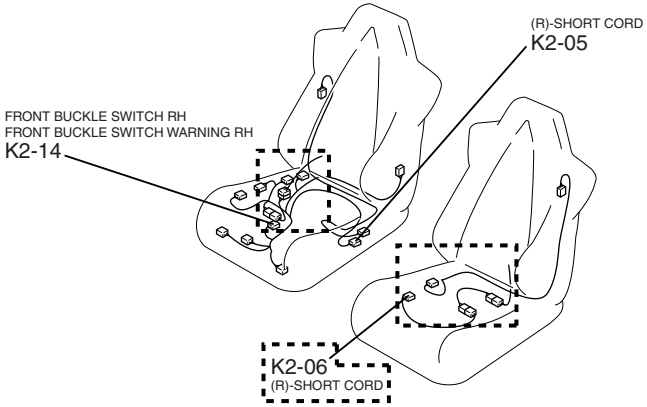

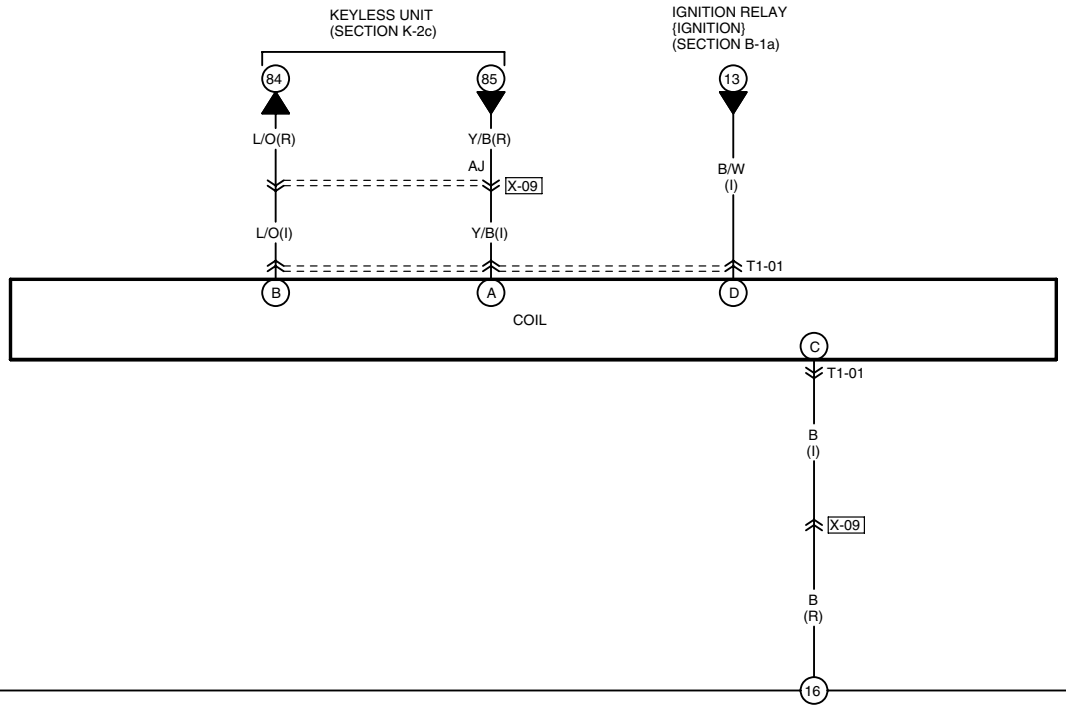
KEYLESS UNIT
(SECTION K-2c)
IGNITION RELAY
{IGNITION}
(SECTION B-1a)
84
85
13
L/O(R)
Y/B(R)
AJ
X-09
B/W
(I)
L/O(I)
Y/B(I)
T1-01
B
A
D
COIL
C
T1-01
B
(I)
X-09
B
(R)
16

T1-01 COIL(I)

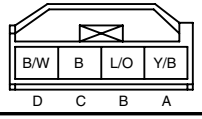
B/W
B
L/O
Y/B
D
C
B
A

HARNESS SYMBOL: (F) (E) (R)

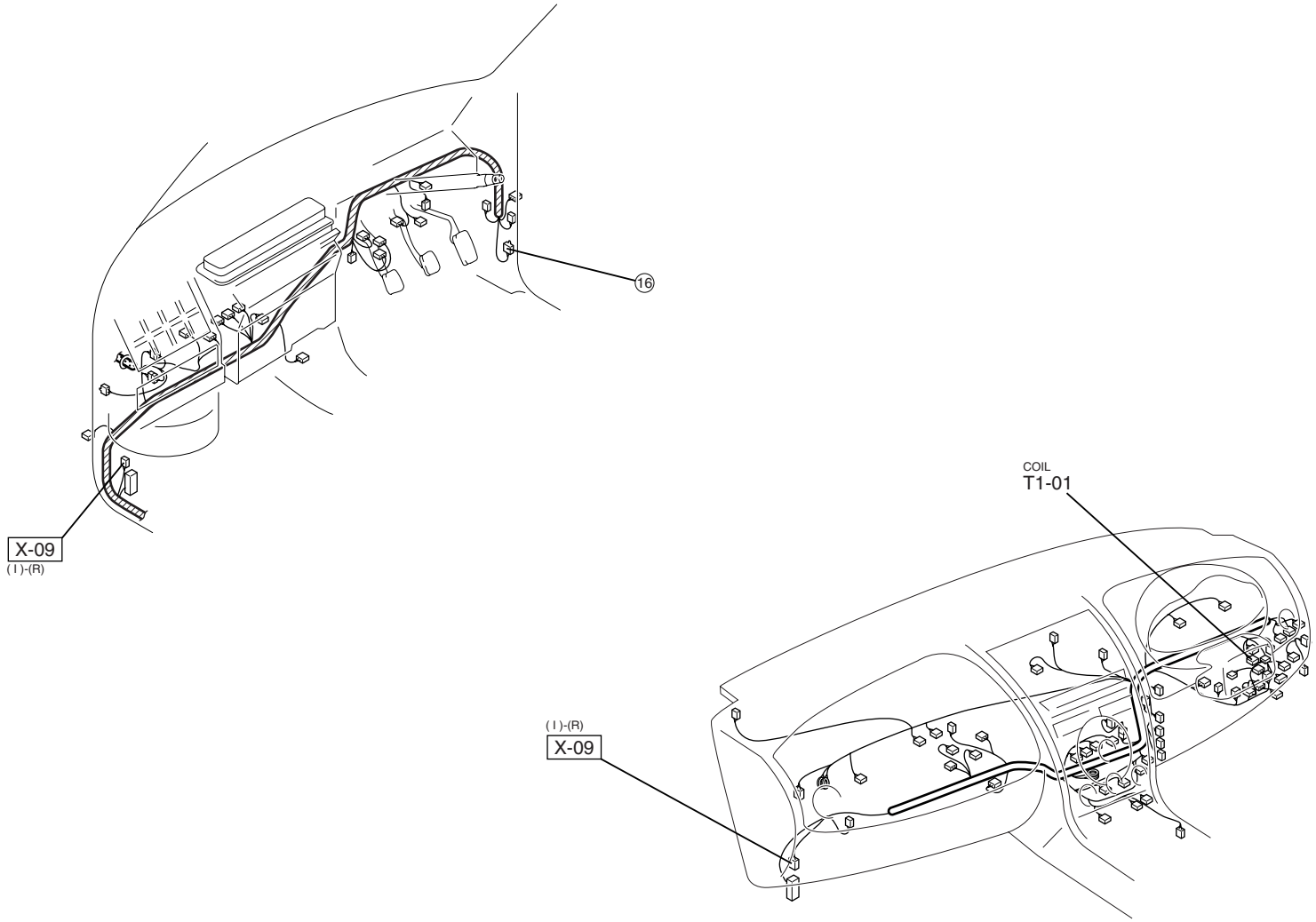

ACCESSORY SOCKET / TRUNK LID OPENER

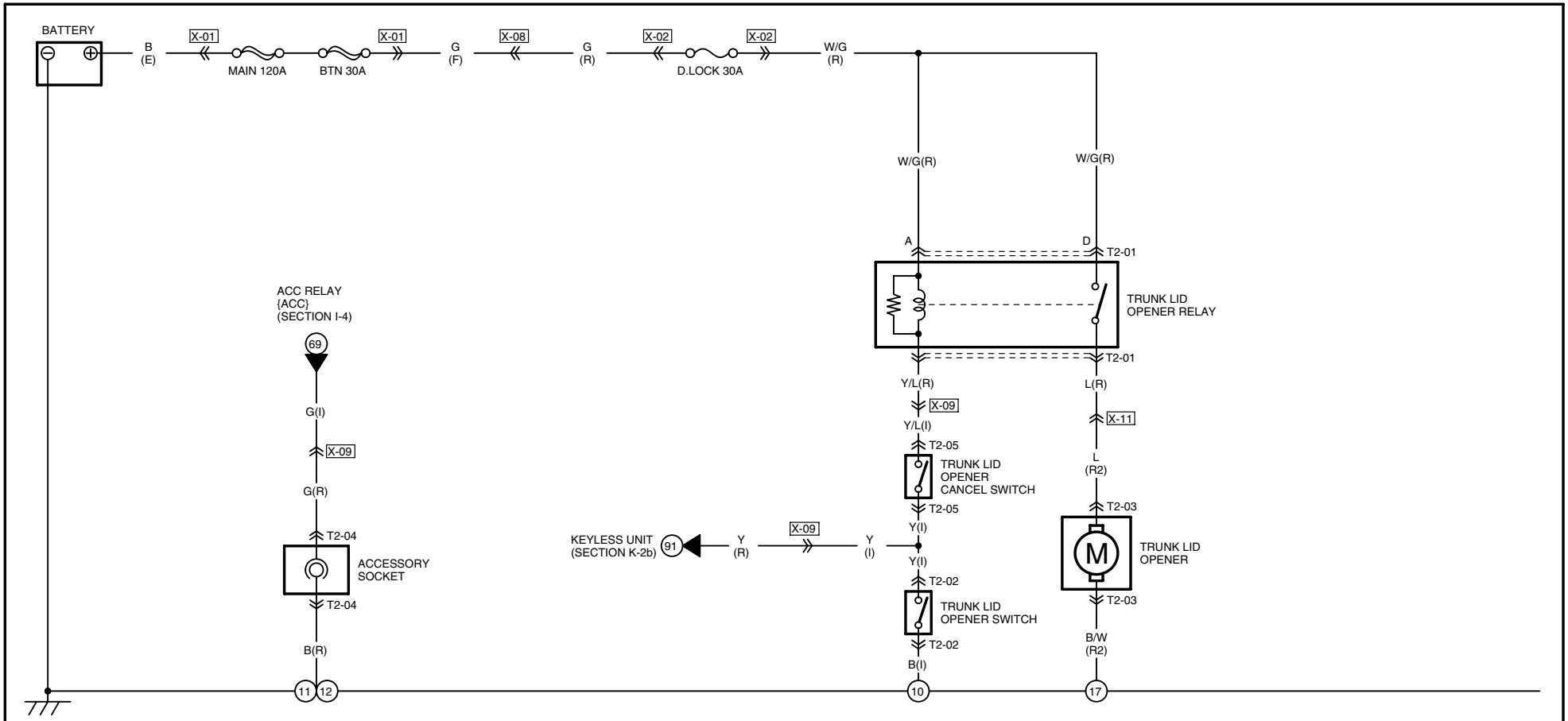

T2-01 TRUNK LID OPENER RELAY(R)	T2-02 TRUNK LID OPENER SWITCH(I)	T2-03 TRUNK LID OPENER(R2)	T2-04 ACCESSORY SOCKET(R)	T2-05 TRUNK LID OPENER CANCEL SWITCH(I)		
Y/L, W/G, A, L, W/G, D	B, Y	B/W, L	G, B	Y, Y/L		

HARNESS SYMBOL: (F) (E) (R)

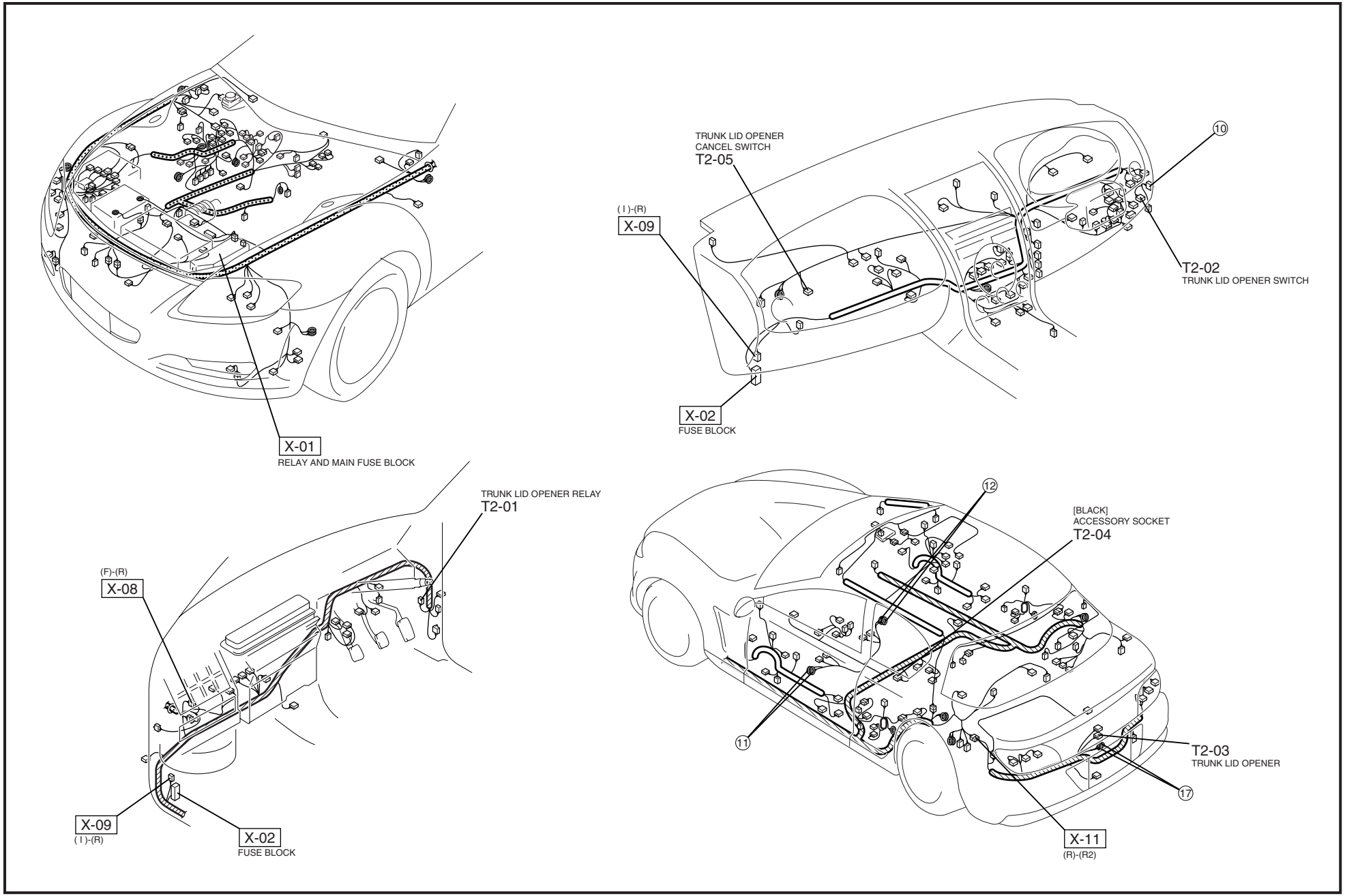

DATA LINK CONNECTOR

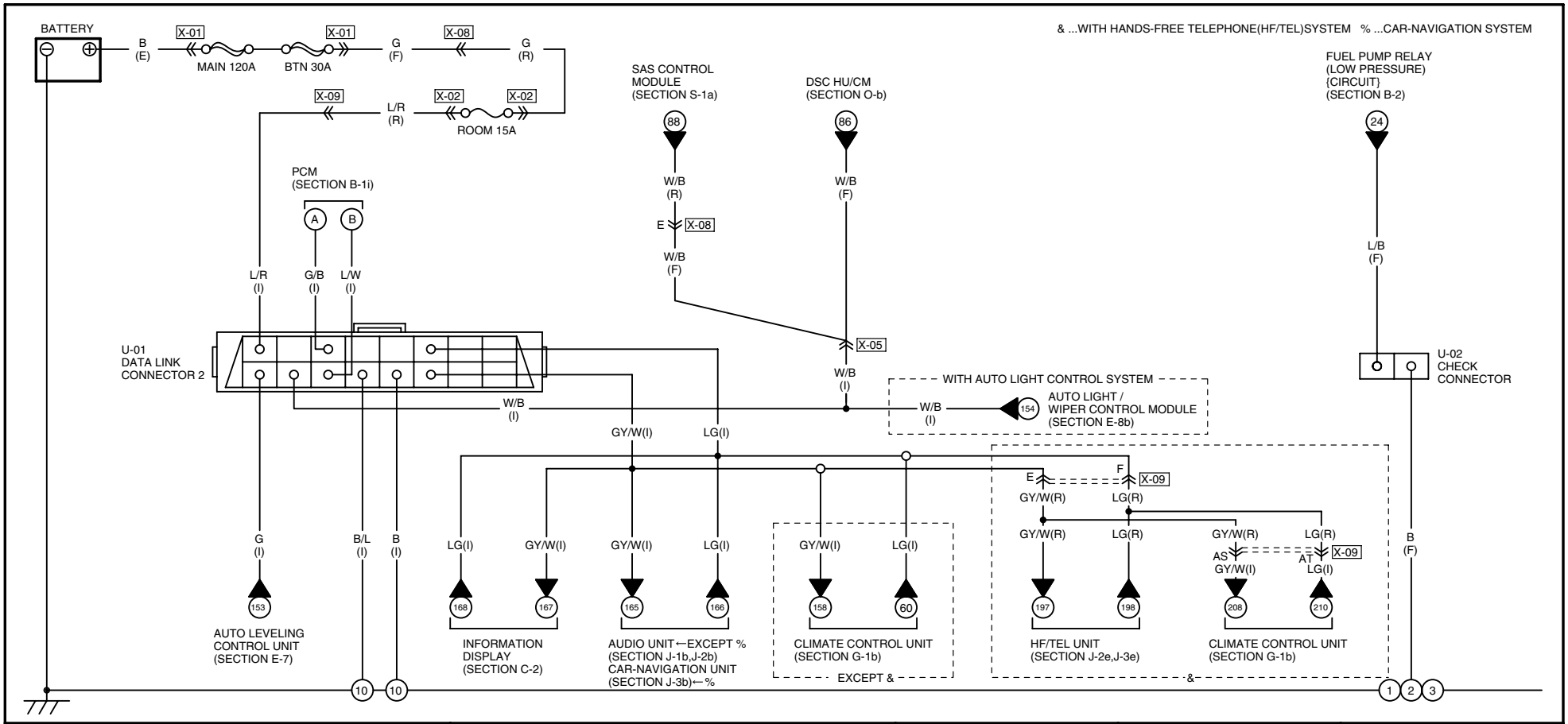

U-01 DATA LINK CONNECTOR 2(I)

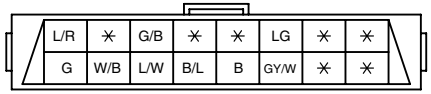

NOTE:THIS IS THE CONNECTOR AS SEEN FROM THE TERMINAL SIDE.

U-02 CHECK CONNECTOR(F)

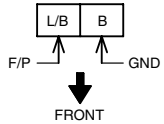

NOTE:THIS IS THE CONNECTOR AS SEEN FROM THE TERMINAL SIDE.

HARNESS SYMBOL: (F) (E) (R)

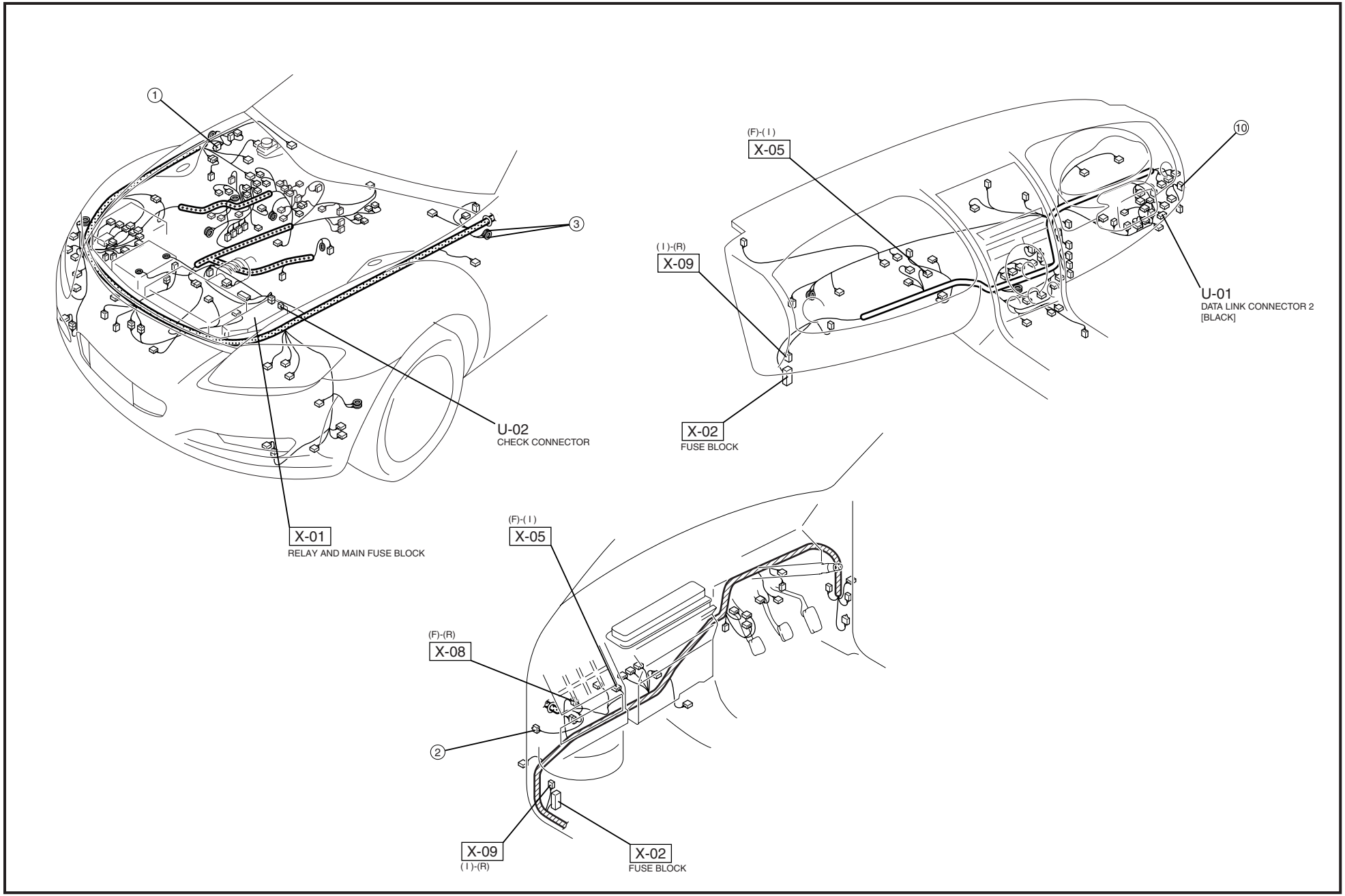

X-01 RELAY AND MAIN FUSE BLOCK

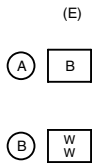

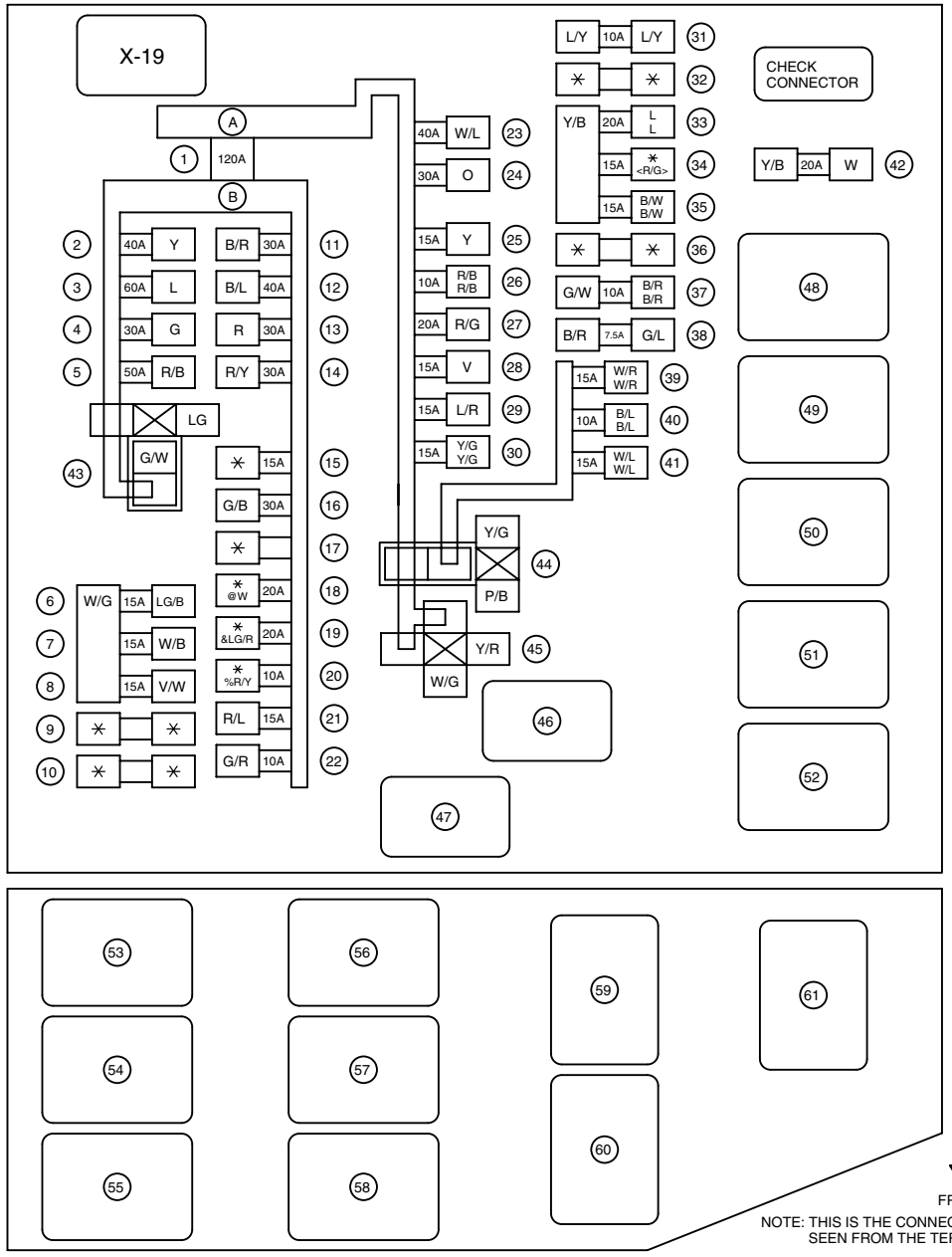

NOTE: THIS IS THE CONNECTOR AS SEEN FROM THE TERMINAL SIDE.

& ...WITH HEADLIGHT CLEANER SYSTEM
@ ...WITH SEAT WARMER
% ...WITH REAR FOG LIGHT
< > ...AT

1	MAIN	21	FOG	41	EGI INJ
2	HEATER	22	A/C	42	P.WIND2
3	AIR PUMP	23	IG	43	TNS RELAY {TAIL}
4	BTN	24	P.WIND1	44	MAIN RELAY {EGI}
5	DEFOG	25	IG KEY	45	HEADLIGHT RELAY {HEAD}
6	HEAD	26	STOP	46	STARTER RELAY {ST}
7	HEAD LOW R	27	FUEL PUMP	47	IGNITION RELAY {IGNITION}
8	HEAD LOW L	28	HORN	48	ACC RELAY {ACC}
9	——	29	HAZARD	49	HORN RELAY {HORN}
10	——	30	ETV	50	FRONT FOG LIGHT RELAY {FOG}
11	FAN1	31	ST	51	(REAR FOG LIGHT RELAY {R.FOG})
12	ABS/DSC	32	——	52	DRIVE-BY-WIRE RELAY {ETV}
13	ACC	33	WIPER	53	COOLING FAN RELAY No.3 {COOLING FAN3}
14	FAN2	34	(TCM)	54	BLOWER RELAY {HEATER}
15	(DRL)	35	ENGINE	55	FUEL PUMP SPEED CONTROL RELAY(HIGH PRESSURE) {FUEL}
16	(DSC)	36	——	56	COOLING FAN RELAY No.1 {COOLING FAN1}
17	——	37	TAIL	57	(SEAT WARMER RELAY {SEAT WARM})
18	(SEAT WARM)	38	ILLUMI	58	FUEL PUMP RELAY (LOW PRESSURE) {CIRCUIT}
19	(H/CLEAN)	39	EGI COMP1	59	A/C RELAY {AIR COND}
20	(R.FOG)	40	EGI COMP2	60	REAR WINDOW DEFROSTER RELAY {DEFOG}
				61	COOLING FAN RELAY No.2 {COOLING FAN2}

{ } NAME INDICATED ON FUSE BOX COVER
( ) EQUIPPED ONLY WITH THE RELATED SYSTEM

COMMON CONNECTOR LIST

X-02 FUSE BLOCK

...WITH BOSE

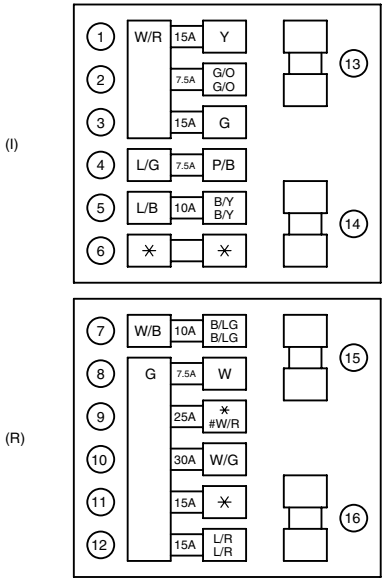

NOTE: THIS IS THE CONNECTOR AS SEEN FROM THE TERMINAL SIDE.

1	CIGAR	9	(AUDIO)
2	ACC	10	D.LOCK
3	PWR	11	(OUTLET)
4	A/C	12	ROOM
5	METER	13	SPARE
6	——	14	SPARE
7	(M.DEF)	15	SPARE
8	(DSC)	16	SPARE

( ) EQUIPPED ONLY WITH THE RELATED SYSTEM

X-04 IGNITION SWITCH(I)

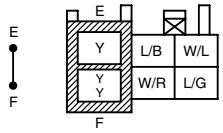

X-05 FRONT(F)-INSTRUMENT PANEL(I)

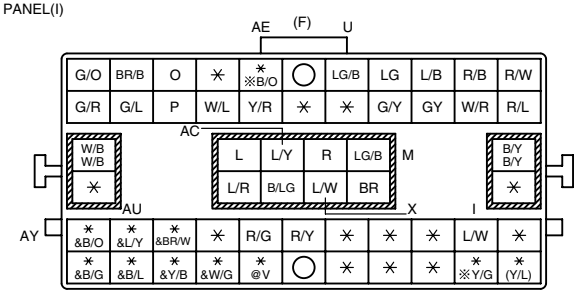

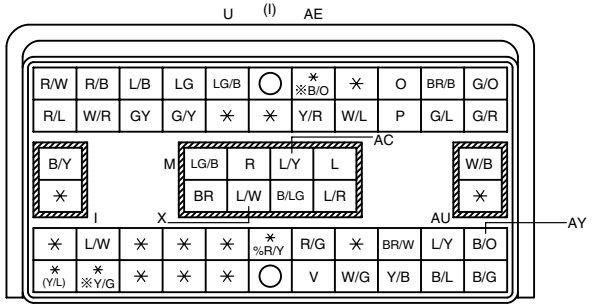

& ...WITH HEADLIGHT AUTO LEVELING SYSTEM
@ ...WITH HEADLIGHT CLEANER SYSTEM
( ) ...WITH REAR FOG LIGHT
※ ...WITH PASSENGER-SIDE AIR BAG CUT-OFF SYSTEM
% ...WITH CAR-NAVIGATION SYSTEM

X-06 FRONT(F)-INSTRUMENT PANEL(I)

@ ...WITH REAR FOG LIGHT
& ...MT

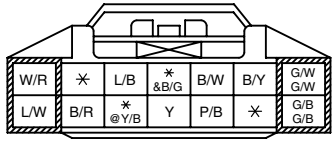

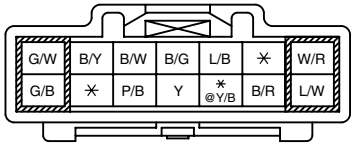

X-07 FRONT(F)-REAR(R)

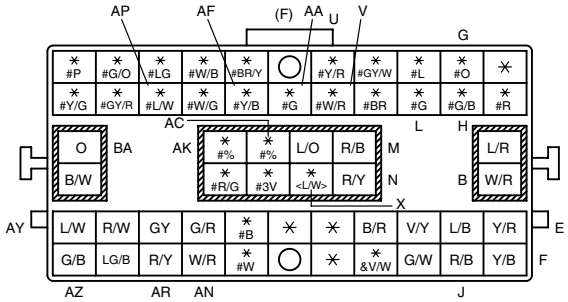

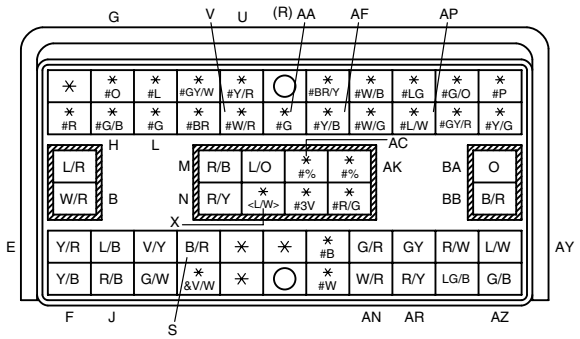

...AT
& ...WITH THEFT-DETERRENT SYSTEM
#3 ...MT
% ...BARE WIRE
< > ...WITH SEAT WARMER

X-08 FRONT(F)-REAR(R)

...WITH PASSENGER-SIDE AIR BAG CUT-OFF SYSTEM

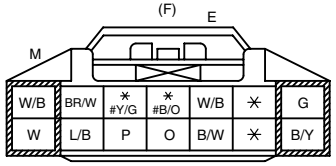

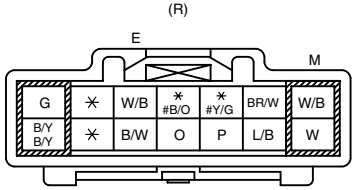

X-09 INSTRUMENT PANEL(I)-REAR(R)

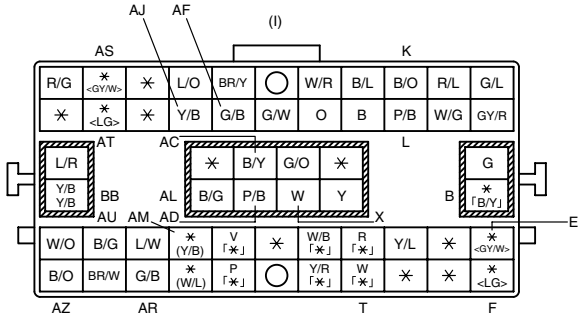

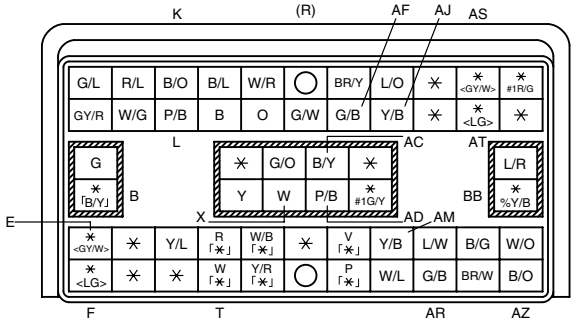

% ...WITH REAR FOG LIGHT
< > ...WITH HANDS-FREE TELEPHONE(HF/TEL) SYSTEM
「 」...WITH BOSE
( ) ...WITH AUTO LIGHT CONTROL SYSTEM
#1 ...AT

COMMON CONNECTOR LIST

X-10 INSTRUMENT PANEL(I)-REAR(R)

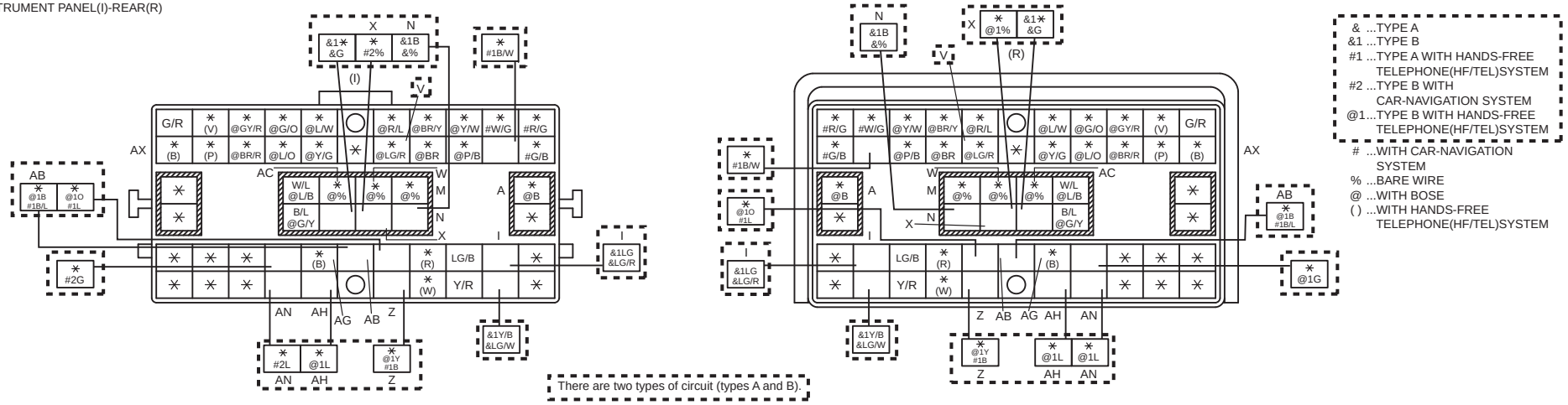

X-11 REAR(R)-REAR No.2(R2)

...WITH REAR FOG LIGHT

X-12 REAR(R)-INTERIOR LIGHT(IN)

...WITH SLIDING SUNROOF

X-13 REAR(R)-INTERIOR LIGHT No.2(IN2)

& ...WITH AUTO LIGHT CONTROL SYSTEM
@ ...WITH THEFT-DETERRENT SYSTEM
# ...WITH SLIDING SUNROOF

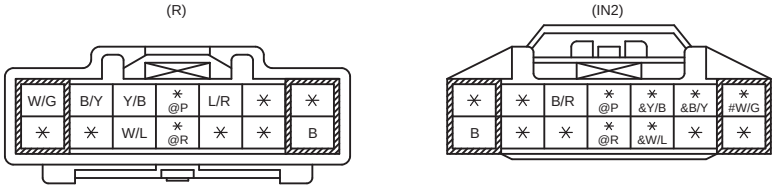

X-14 REAR(R)-DOOR No.1(DR1)

...WITH BOSE

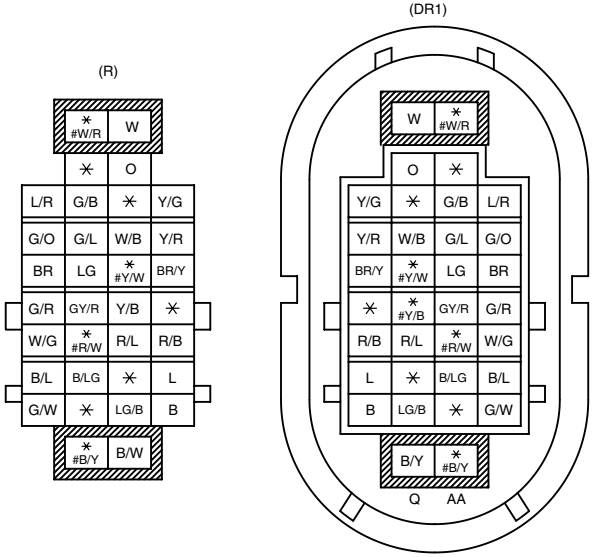

X-15 REAR(R)-DOOR No.2(DR2)

& ...WITH THEFT-DETERRENT SYSTEM
# ...WITH BOSE

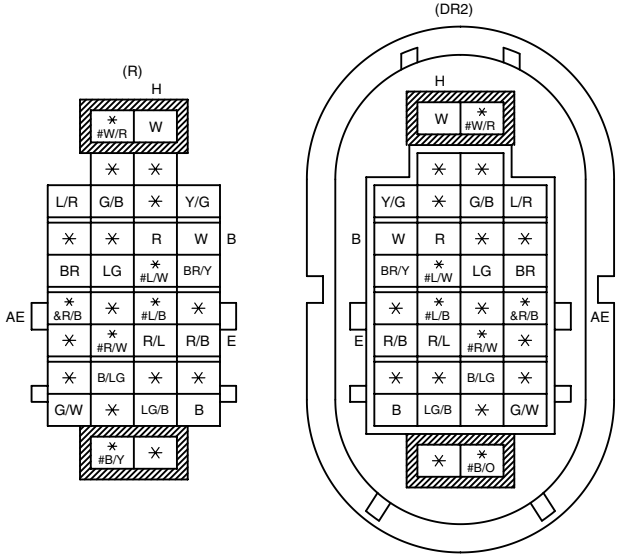

X-16 REAR(R)-DOOR No.3(DR3)

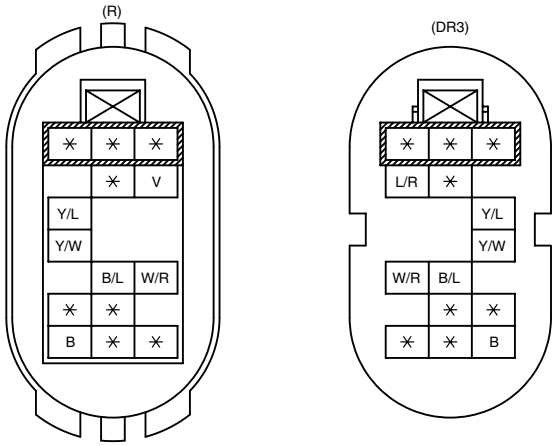

X-17 REAR(R)-DOOR No.4(DR4)

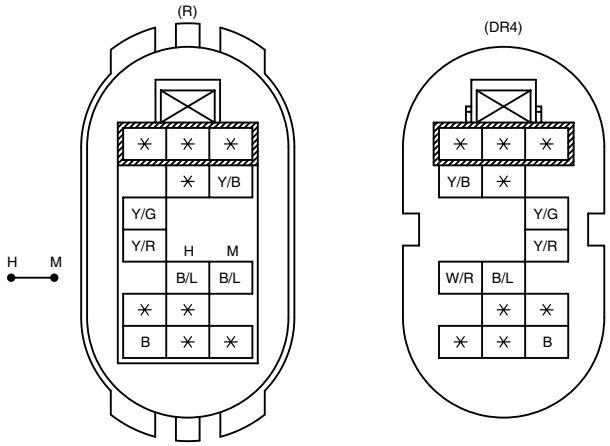

COMMON CONNECTOR LIST

X-19 FRONT(F)-ENGINE(E)

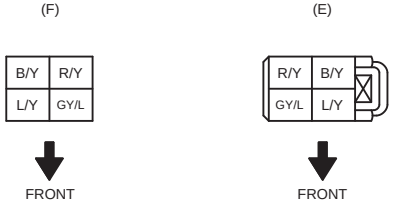

NOTE:THIS IS THE CONNECTOR AS
SEEN FROM THE TERMINAL SIDE.

X-20 ENGINE(E)-ENGINE No.2(E2)

@ ...MT

X-23 JOINT CONNECTOR(I)

...TYPE A WITH HANDS-FREE TELEPHONE(HF/TEL)SYSTEM

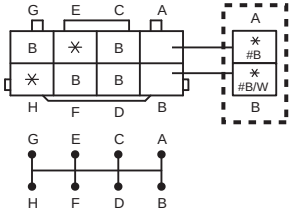

There are two types of circuit (types A and B).

X-28 FRONT(F)-ENGINE(E)

ALPHABETICAL INDEX

A

A/C AMPLIFIER 86
A/C RELAY 90, 168
A/F SENSOR 40
ABBREVIATIONS 12
ABS WHEEL-SPEED SENSOR 146
ACC RELAY 106, 168
ACCELERATOR PEDAL POSITION SENSOR..... 30
ACCESSORY SOCKET 164
AIR BAG MODULE 156
AIR INTAKE ACTUATOR 86
AIR MIX ACTUATOR 88
AIRFLOW MODE ACTUATOR 88
AMBIENT TEMPERATURE SENSOR 88
AUDIO AMPLIFIER 116, 126
AUDIO CONTROL SWITCH..... 108, 112, 122
AUDIO UNIT 108, 112
AUDIOPILOT MICROPHONE 116, 126
AUTO LEVELING CONTROL UNIT 74
AUTO LEVELING SENSOR 74
AUTO LIGHT / WIPER CONTROL MODULE 76
AUXILIARY JACK..... 110, 114, 124
AUXILIARY PORT VALVE MOTOR 34

B

BACK-UP LIGHT 82
BACK-UP LIGHT SWITCH 82
BLOWER MOTOR 86
BLOWER RELAY 86, 168
BONNET SWITCH 138
BRAKE FLUID LEVEL SENSOR 52
BRAKE LIGHT 84
BRAKE SWITCH 28, 84
BUCKLE SWITCH 134
BUCKLE SWITCH WARNING 160

C

CABIN TEMPERATURE SENSOR 88
CAR-NAVIGATION UNIT 122
CENTER SPEAKER 118, 128
CHECK CONNECTOR 166
CIGARETTE LIGHTER 106
CLIMATE CONTROL UNIT 88
CLOCK
SPRING 30, 84, 92, 102, 108, 112, 122, 156
CLUTCH PEDAL POSITION SWITCH 28
COIL 162
COMBINATION LIGHT 62, 64, 72, 74
COMBINED SENSOR 148
COMMON CONNECTOR LIST 168
CONDENSER 28, 44, 96
CONTROL VALVE BODY 94
COOLANT LEVEL SWITCH 28
COOLING FAN MOTOR 46
COOLING FAN RELAY 46, 168
COURTESY LIGHT 104
CRASH ZONE SENSOR 160
CRUISE CONTROL SWITCH 30
CURTAIN AIR BAG MODULE 160

D

DATA LINK CONNECTOR 2 166
DISCHARGE HEADLIGHT
CONTROL UNIT 62
DOOR LATCH SWITCH 56
DOOR LOCK ACTUATOR 136
DOOR LOCK-LINK SWITCH 134
DOOR SPEAKER 108, 118, 128
DOOR SPEAKER AMPLIFIER 118, 128
DOOR SWITCH 56
DOUBLE LOCK SWITCH 136
DOWN SWITCH 92
DRIVE-BY-WIRE RELAY 26, 168
DRIVER-SIDE AIR BAG MODULE 156
DRIVER-SIDE CURTAIN AIR BAG MODULE 160
DRIVER-SIDE PRE-TENSIONER SEAT BELT 158
DRIVER-SIDE SIDE AIR BAG MODULE 158
DRIVER-SIDE SIDE AIR BAG SENSOR 158
DSC HU/CM 146
DSC OFF SWITCH 146

E

ECCENTRIC SHAFT POSITION SENSOR 40
ELECTRICAL WIRING SCHEMATIC 22
ENGINE COOLANT TEMPERATURE SENSOR 34
EPS CONTROL MODULE 144
EPS MOTOR 144
EVAPORATOR TEMPERATURE SENSOR 88

F

FILAMENT 96
FLASHER UNIT 80
FOG LIGHT 68, 70
FOG LIGHT RELAY 68, 70, 168
FOG LIGHT SWITCH 68, 70
FRONT AUTO LEVELING SENSOR 74
FRONT BUCKLE SWITCH 134
FRONT BUCKLE SWITCH WARNING 160
FRONT COMBINATION
LIGHT 62, 64, 72, 74
FRONT DOOR LOCK ACTUATOR 136
FRONT DOOR SPEAKER 108, 118, 128
FRONT DOOR SPEAKER AMPLIFIER 118, 128
FRONT FOG LIGHT 68
FRONT FOG LIGHT RELAY 68, 168
FRONT FOG LIGHT SWITCH 68
FRONT SIDE TURN LIGHT 80
FRONT TILT MOTOR 150
FRONT TILT POSITION SENSOR 152
FRONT TURN LIGHT 80
FRONT TWEETER 108, 118, 128
FUEL GAUGE SENDER UNIT 44
FUEL INJECTOR 34
FUEL PUMP RELAY 44, 168
FUEL PUMP RESISTOR 44
FUEL PUMP SPEED CONTROL RELAY 44, 168
FUEL PUMP UNIT 44
FUEL SUCTION PIPE BRACKET 44
FUSE BLOCK 144, 168

G

GENERAL INFORMATION 2
GENERATOR 24
GLOVE COMPARTMENT LIGHT 102
GROUND ILLUMINATION LIGHT 104

ALPHABETICAL INDEX

GROUND POINT 18

H

HAZARD WARNING SWITCH 80
HEADLIGHT 62, 64
HEADLIGHT CLEANER MOTOR 66
HEADLIGHT CLEANER RELAY 66
HEADLIGHT LEVELING ACTUATOR 74
HEADLIGHT RELAY 62, 64, 168
HEADLIGHT SWITCH 62, 64
HEATED OUTER MIRROR 140
HEATED OXYGEN SENSOR 32
HF/TEL UNIT 120, 130
HIGH-MOUNT BRAKE LIGHT 84
HORN 84
HORN RELAY 84, 168
HORN SWITCH 84

I

IAT SENSOR 30
IGNITION COIL 36
IGNITION RELAY 26, 168
ILLUMINATION
  ASHTRAY 98
  AUDIO CONTROL SWITCH 102
  AUDIO UNIT 98
  CAR-NAVIGATION UNIT 98
  CIGARETTE LIGHTER 98
  CLIMATE CONTROL UNIT 98
  CONTROL SWITCH 102
  CRUISE CONTROL SWITCH 102
  DOWN SWITCH 102
  DSC OFF SWITCH 98
  HAZARD WARNING SWITCH 100
  IGNITION KEY 50
  INSTRUMENT CLUSTER 102
  NAVIGATION REMOCON 100
  POWER WINDOW MAIN SWITCH 100
  SEAT WARMER SWITCH 100
  SELECTOR 100
  STEERING SWITCH 102
  VANITY MIRROR 104
INFORMATION DISPLAY 58, 100
INSTRUMENT CLUSTER 50
INTERIOR LIGHT 104
INTRUDE SENSOR 138

K

KEY REMINDER SWITCH 50
KEYLESS UNIT 134
KNOCK SENSOR 32

L

LICENSE PLATE LIGHT 72
LINE PRESSURE CONTROL SOLENOID 94
LOCK RELEASE SOLENOID 134
LUMBAR SUPPORT MOTOR 150

M

MAF SENSOR 30
MAGNETIC CLUTCH 90
MAIN RELAY 26, 168
MAP LIGHT 104
METERING OIL PUMP 38
METERING OIL PUMP DRIVER 38
MICROPHONE 120, 124

N

NEUTRAL SWITCH 36, 90
NOISE FILTER 84, 96, 144
NAVIGATION REMOCON 124

O

OIL CONTROL VALVE 40
OIL PRESSURE SENSOR 40
OIL-LEVEL SWITCH 36

P

PANEL LIGHT CONTROL SWITCH 102
PARKING BRAKE SWITCH 54
PARKING LIGHT 72
PASSENGER-SIDE AIR BAG MODULE 156
PASSENGER-SIDE CURTAIN
  AIR BAG MODULE 160
PASSENGER-SIDE PRE-TENSIONER
  SEAT BELT 158
PASSENGER-SIDE SIDE AIR BAG MODULE 158
PASSENGER-SIDE SIDE AIR BAG SENSOR 158
PASSENGER AIR BAG
  DEEACTIVATION SWITCH 156
PCM 26
POWER OUTER MIRROR 140
POWER OUTER MIRROR SWITCH 140
POWER SEAT SWITCH 150
POWER TRANSISTOR 86
POWER WINDOW MAIN SWITCH 132
POWER WINDOW MOTOR 132
POWER WINDOW SUBSWITCH 132
PRE-TENSIONER SEAT BELT 158
PURGE SOLENOID VALVE 32

R

RAIN SENSOR 78
REAR AUTO LEVELING SENSOR 74
REAR DOOR LATCH SWITCH 56
REAR FOG LIGHT 70
REAR FOG LIGHT RELAY 70, 168
REAR FOG LIGHT SWITCH 70
REAR SPEAKER 108, 116, 126
REAR TILT MOTOR 150
REAR TILT POSITION SENSOR 152
REAR TURN LIGHT 80
REAR TWEETER 116, 126
REAR WINDOW DEFROSTER RELAY 96, 168
RECLINER MOTOR 150
RECLINER POSITION SENSOR 152
REFRIGERANT PRESSURE SWITCH 86

S

SAS CONTROL MODULE 156
SEAT WARMER 154
SEAT WARMER RELAY 154, 168
SEAT WARMER SWITCH 154
SECONDARY AIR INJECTION PUMP 26
SECONDARY AIR INJECTION PUMP RELAY 26
SECONDARY AIR INJECTION
  SOLENOID VALVE 32

ALPHABETICAL INDEX

SECONDARY SHUTTER VALVE
SOLENOID VALVE..... 32
SELECTOR LEVER COMPONENT 92
SHIFT SOLENOID..... 94
SIDE AIR BAG MODULE 158
SIDE AIR BAG SENSOR..... 158
SIDE TURN LIGHT..... 80
SLIDE MOTOR..... 150
SLIDE POSITION SENSOR..... 152
SOLAR RADIATION SENSOR..... 88
SPEAKER..... 108, 116, 126
STARTER..... 24
STARTER RELAY 24, 168
STEERING ANGLE SENSOR..... 146
SUNROOF MOTOR 142
SUNROOF SWITCH..... 142

T

TAILLIGHT..... 72
TCC CONTROL SOLENOID 94
TCM..... 92
THEFT-DETERRENT SIREN..... 138
THROTTLE BODY..... 40
TILT MOTOR..... 150
TILT POSITION SENSOR..... 152
TNS RELAY..... 62, 64, 168
TORQUE SENSOR 144
TRANSMISSION FLUID
TEMPERATURE CHECK CONNECTOR..... 92
TRANSMISSION FLUID
TEMPERATURE SENSOR 94
TRANSMISSION RANGE SWITCH 24, 92
TRUNK COMPARTMENT LIGHT..... 96
TRUNK COMPARTMENT LIGHT SWITCH 96
TRUNK LID OPENER..... 164
TRUNK LID OPENER CANCEL SWITCH..... 164
TRUNK LID OPENER RELAY..... 164
TRUNK LID OPENER SWITCH 164
TURBINE SENSOR..... 92
TURN LIGHT 80
TURN SWITCH..... 80
TWEETER
(FRONT)..... 108, 118, 128
(REAR) 116, 126

U

UP SWITCH..... 92

V

VARIABLE DYNAMIC EFFECT INTAKE-AIR
SOLENOID VALVE..... 32
VARIABLE FRESH AIR DUCT
SOLENOID VALVE..... 30
VEHICLE IDENTIFICATION NUMBERS (VIN) 3
VEHICLE SPEED SENSOR..... 92

W

WALK IN SWITCH..... 152
WASHER FLUID-LEVEL SENSOR..... 66
WINDOW DEFROSTER RELAY..... 96, 168
WINDSHIELD WASHER MOTOR..... 60
WINDSHIELD WIPER AND
WASHER SWITCH.....60
WINDSHIELD WIPER MOTOR.....60